Dec. 29, 1931. F. BAUER 1,838,354

AIRCRAFT

Filed Sept. 21, 1929 2 Sheets-Sheet 1

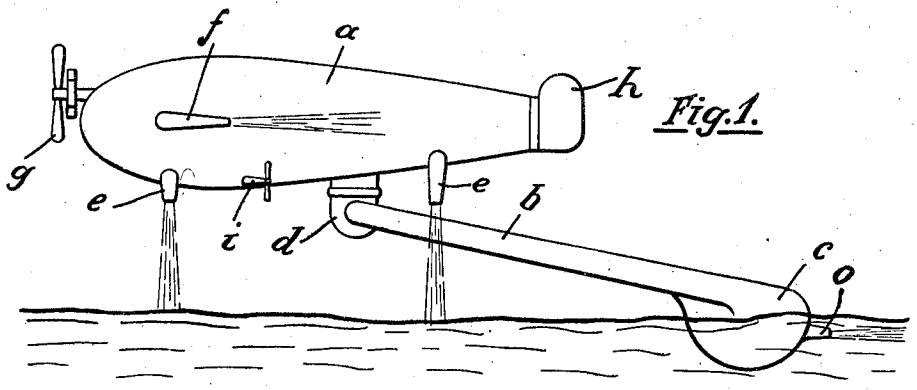

Fig.1.

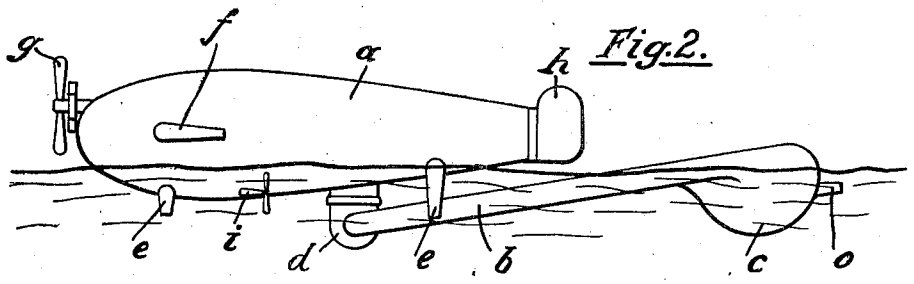

Fig.2.

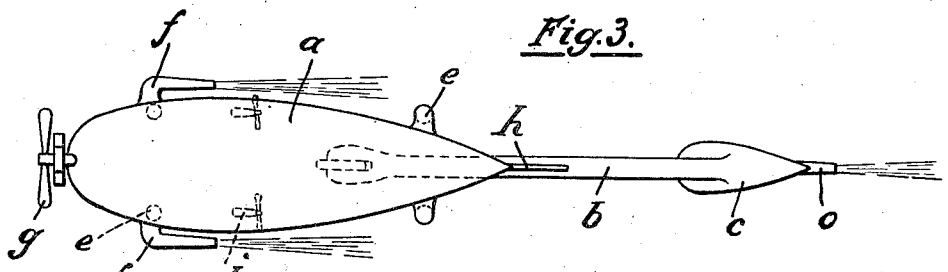

Fig.3.

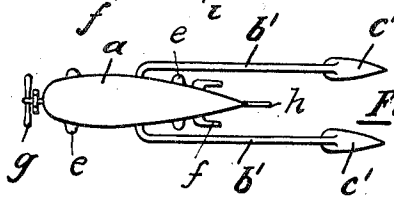

Fig.4.

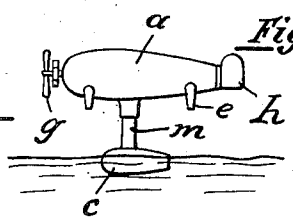

Fig.5.

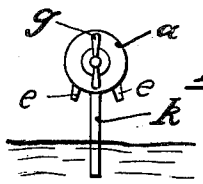

Fig.6.

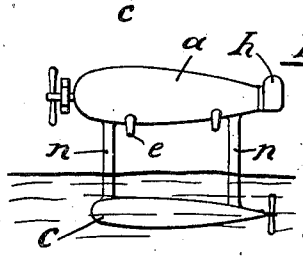

Fig.7.

Inventor:
Fritz Bauer
by Kuenhaller
Atty.

Dec. 29, 1931. F. BAUER 1,838,354

AIRCRAFT

Filed Sept. 21, 1929 2 Sheets-Sheet 2

Fig. 8.

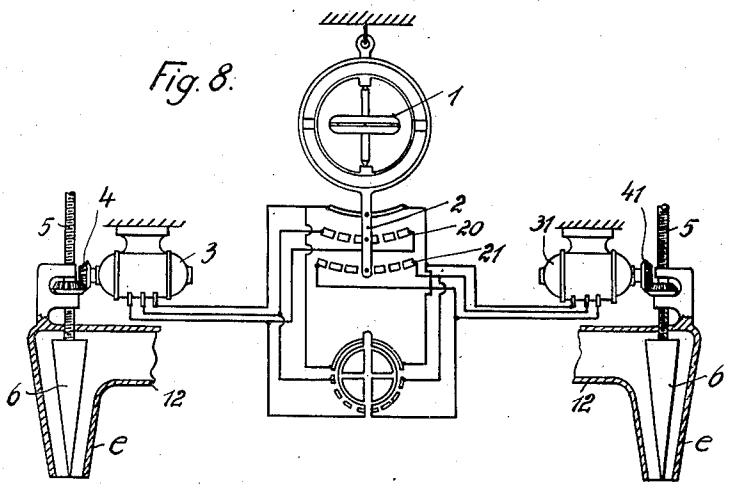

Fig. 9.

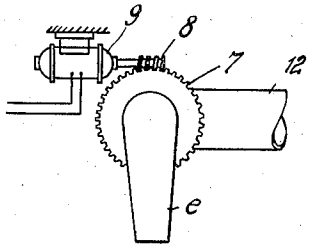

Fig. 10.

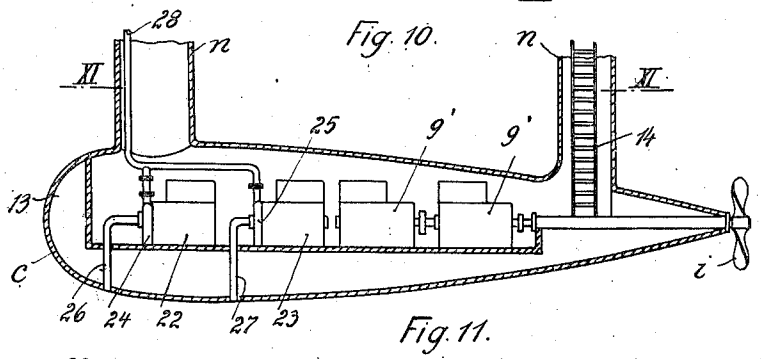

Fig. 11.

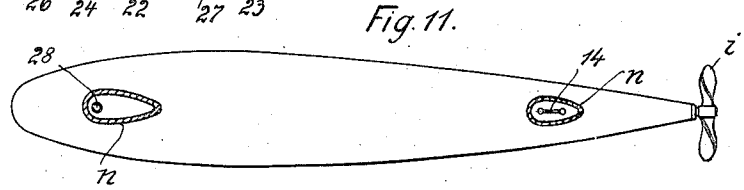

Inventor:
Fritz Bauer
by Kortschichaus
Atty.

Patented Dec. 29, 1931 1,838,354

UNITED STATES PATENT OFFICE

FRITZ BAUER, OF STUTTGART, GERMANY

AIRCRAFT

Application filed September 21, 1929, Serial No. 394,195, and in Germany July 30, 1929.

My invention relates to an air craft, and more particularly to an air craft which, like seaplanes, is adapted to move on or above a body of water. It is an object of my invention to provide a craft which as compared with ships, is able to develop a much higher speed, as compared with seaplanes, has a much larger radius, as compared with airships, is very small, so that its operation and mooring are facilitated, and the air resistance is reduced and, as compared with airplanes, has the advantage of very much increased reliability and safety.

To this end I equip my craft with means for pumping water from a body of water above which the craft is flying, and to eject the water through nozzles on the craft in order to raise the craft from the water and/or to propel it.

In a preferred embodiment of my invention I provide vertical, or substantially vertical, nozzles for raising, and horizontal, or substantially horizontal, nozzles for propelling and steering the craft. It will be understood that the reaction of the issuing jets is relied on for producing the desired effects, and that the craft may be steered by varying the action of the jets issuing at either side of its axis, or by ejecting water on one side of the axis only so that this side will lead. It is also possible to reduce the speed by means of the horizontal jets, and even to arrest the craft by their reaction. Similarly, the craft may be trimmed by varying the axis of the vertical jets.

The jets may be placed at various angles, or may be adjustable, so that a single nozzle may be operated for issuing a horizontal, vertical or inclined jet, or nozzles having a given angle may be operated selectively. Automatic means may be provided for keeping the craft in proper trim or for maintaining a given direction, for instance, the issuing jets may be so regulated by a gyroscope that the craft is kept in perfect trim and in perfect balance.

Preferably, the float is arranged at the end of the water pipe and preferably part of the cargo is carried on the float so that the power required for keeping in the air is reduced. Thus, heavy but comparatively small parts or supplies, the engine, the pump, fuel, oil or the like, will be carried in the float so that the craft is relieved of this weight, while cargo, passengers, luggage, mail, etc. are carried in the craft.

In the drawings affixed to this specification and forming part thereof various types of craft embodying my invention are illustrated diagrammatically by way of example.

In the drawings,

Figs. 1 and 2 are elevations showing a craft having a single suction pipe for pumping water into the craft, Fig. 1 showing the craft raised above, and Fig. 2 showing it floating on the water,

Fig. 3 is a plan view of this craft,

Fig. 4 is a plan view of a craft having two suction pipes,

Fig. 5 is an elevation of a craft having a telescoping suction pipe,

Fig. 6 is an elevation of a craft in which the pipe is arranged in a sort of keel extending into the water,

Fig. 7 is an elevation of a craft having two suction pipes,

Fig. 8 is a diagram showing means for regulating the free area of a pair of nozzles,

Fig. 9 is a diagram showing means for tilting one of the nozzles,

Fig. 10 is a diagram showing a power plant in the float of the unit illustrated in Fig. 7, and

Fig. 11 is a section on the line XI—XI in Fig. 10.

Referring now to the drawings, a is the preferably stream-lined body of the craft, g is a tractor propeller and h is a rudder.

Referring more particularly to Figs. 1 to 3, d is a joint, preferably of the universal type, on the lower part of the craft, b is a suction pipe connected with the joint d, c is a float at the free end of the suction pipe, and o is a nozzle extending to the rear of the float.

A power plant, not shown, is arranged in the body of the air craft and connected with vertical nozzles e, e and horizontal nozzles f, f through which the water from the suc-

tion pipe *b* is delivered in vertical and horizontal jets, as shown in Fig. 1. It will appear, that four vertical and two horizontal nozzles are provided, but obviously I may provide any number of nozzles and, instead of fixed horizontal and vertical nozzles I may provide nozzles which are adapted to be placed in vertical and horizontal position, as required, or may arrange the nozzles at various angles, as and for the purpose specified. By means of the vertical nozzles, or adjustable nozzles placed in vertical position, the craft is raised from the water and by means of the horizontal nozzles, or adjustable nozzles placed in horizontal position, it is propelled and steered by varying the direction in which the jets issue on either side of the craft, or by operating the nozzle or nozzles only on one side so that the side with the active nozzle or nozzles will lead, or by operating selectively nozzles arranged at various angles.

The nozzle *o* on the float may, or may not, be provided. It is supplied with water by a separate delivery pipe, not shown, which may be arranged centrally within the suction pipe *b*. The action of the propeller *g* may assist, or replace, that of the horizontal nozzles *f*, as regards propulsion and a similar relation exists between the nozzles and the rudder *h*, as regards steering.

i are hydraulic propellers by which the craft is operated when floating on the water, Fig. 2, and obviously the action of these propellers may also be assisted or replaced by the other propelling means provided.

When the pump, or the pumping plant, is arranged in the float *c*, the pipe *b* will be the delivery pipe through which water is supplied to the nozzles on the craft.

Obviously the float *c* and its connection with the suction or delivery pipe *b*, may be stream-lined. For large craft, the pipe *b* is equipped with a gangway, not shown, so that the parts or supplies in the float *c* are accessible from the craft, and obviously the unoccupied areas of the pipe *b* may be utilized for arranging gearings and other machinery, or the like.

The craft may be so designed that the joint *d* is within its body, and so that the float *c* and the pipe *b* may be concealed therein.

Referring now to Fig. 4, the pipe *b* and the float *c* have been subdivided into two pipes *b'*, each with a float *c'*.

Instead of a hinged connection *d* of the line *b* with the craft, I may provide a telescoping connection *m*, as shown in Fig. 5, or I may provide a keel *k* which extends to the low water level in all positions of the craft with respect to the body of water, as shown in Fig. 6, and is equipped with a suction pipe.

As shown in Fig. 7, two pipes *n* are provided at the front and at the rear of the float *c* which in the present instance is equipped with a propeller *i* at its rear end.

Any number of pipes may be provided between the craft and its float *c*.

Preferably the ends of the suction pipes are provided with screens for preventing access of foreign matter.

It will be understood from this description that the craft behaves like a normal ship when floating on the water and may be propelled like any such craft by its propellers *i* or the horizontal nozzles *f*. The speed obtained in this manner is obviously slow, but when the craft has been raised from the water it is only influenced by the air resistance of the body and by the comparatively small resistance of the float *c* in the water. In this manner high speed is obtained with the craft raised from the water level, while on the other hand its altitude above the level is limited by the necessity of keeping the float *c* in the water, so that even in case of a total failure of the means for ejecting water from the nozzles, there is no danger, as in this case the craft will gradually be lowered to the water level, and may still be operated like a ship.

A particular advantage is the possibility of keeping the craft stationary above the water by suitable operation of its nozzles, and of arresting it by the reaction of the issuing jets in the manner of a brake.

The details illustrated in Figs. 8–11 will now be described.

Referring first to Fig. 8, 1 is a gyroscopic regulator, with a contact arm 2, 20 and 21 are sets of contacts which are adapted to be controlled by the contact arm 2 and are connected with a motor 3 and a motor 31, respectively, for either nozzle *e*. Both nozzles are connected with a pipe 12, and 6 are needle valves for varying the effective area of each nozzle. The needle valves 6 are fitted on threaded spindles 5 which are rotated by bevel gearing 4 and 41 from the motors 3 and 31, respectively, so as to vary the free area of the nozzles.

Referring now to Fig. 9, the nozzle *e* is connected with the pipe 12 by means which permit the nozzle to rotate about its axis while maintaining its connection with the pipe 12. Such means may be a stuffing box of any suitable type in connection with a worm gear 7 on the nozzle *e*, a worm 8, and a motor 9 on the shaft of which the worm 8 is secured.

Referring now to Figs. 10 and 11, *c* is the float described with reference to Fig. 7, with its propeller *i* and the pipes *n* which connect the float with the body *a* of the craft, 9', 9' are engines which rotate the propeller *i* and 22, 23 are engines each of which is connected with a pump 24 and 25, respectively, for drawing water from suction pipes 26 and 27, respectively, and conveying it to the body *a*

through a delivery pipe 28 which may be connected with the pipe or pipes 12 of the several nozzles *e*. 13 is a fuel tank in the float *c*.

As will appear from Fig. 11 the pipes *n*, *n* are stream-lined in section. The space of the leading pipe *n* which is not occupied by the delivery pipe 26, may serve for communication and, if desired, a ladder may be provided in its free space, as shown for the trailing pipe *n* at 14.

I wish it to be understood that I do not desire to be limited to the exact details of construction shown and described for obvious modifications will occur to a person skilled in the art.

In the claims affixed to this specification no selection of any particular modification of the invention is intended to the exclusion of other modifications thereof and the right to subsequently make claim to any modification not covered by these claims is expressly reserved.

I claim:—

1. Air craft comprising a hull, reaction nozzles on said hull, a float, a pipe connecting said float with said hull and means for lifting water through said float and pipe and for ejecting it through said nozzles in closed cycle.

2. Air craft comprising a hull, reaction nozzles on said hull, a float, a pipe pivotally connecting said float with said hull and means for lifting water through said float and pipe and for ejecting it through said nozzles in closed cycle.

3. Air craft comprising a hull, adjustable reaction nozzles on said hull, a float, a pipe connecting said float with said hull and means for lifting water through said float and pipe and for ejecting it through said nozzles in closed cycle.

4. Air craft comprising a hull, downwardly directed reaction nozzles on said hull, a float, a pipe connecting said float with said hull and means for lifting water through said float and pipe and for ejecting it through said nozzles in closed cycle.

5. Air craft comprising a hull, downwardly directed and rearwardly directed reaction nozzles on said hull, a float, a pipe connecting said float with said hull and means for lifting water through said float and pipe and for ejecting it through said nozzles in closed cycle.

6. Air craft comprising a hull, fixed downwardly directed and a pair of rearwardly directed reaction nozzles on said hull, a float, a pipe connecting said float with said hull and means for lifting water through said float and pipe and for ejecting it through said nozzles in closed cycle.

7. Air craft comprising a hull, an air propeller and reaction nozzles on said hull, a float, a pipe connecting said float with said hull and means for lifting water through said float and pipe and for ejecting it through said nozzles in closed cycle.

8. Air craft comprising a hull, reaction nozzles on said hull, a float, a pipe connecting said float with said hull and means in said float for lifting water through said float and pipe and for ejecting it through said nozzles in closed cycle.

9. Air craft comprising a hull, reaction nozzles on said hull, a float, a pipe connecting said float with said hull, means for lifting water through said float and pipe and for ejecting it through said nozzles in closed cycle and means for varying the operative condition of said nozzles.

10. Air craft comprising a hull, reaction nozzles on said hull, a float, a pipe connecting said float with said hull, means for lifting water through said float and pipe and for ejecting it through said nozzles in closed cycle and gyratic means for varying the operative condition of said nozzles.

In testimony whereof I affix my signature.

FRITZ BAUER.