# United States Patent [19]

**Jakubauskas**

[11] **3,917,921**

[45] **Nov. 4, 1975**


[54] **SLIDE ACTUATED SWITCH**


[75] Inventor: **Alexander J. Jakubauskas**, Chicago, Ill.

[73] Assignee: **Illinois Tool Works Inc.**, Chicago, Ill.



[22] Filed: **Sept. 11, 1974**

[21] Appl. No.: **505,179**

[52] **U.S. Cl.** ..... **200/333**; 29/203 B; 29/622; 200/293

[51] **Int. Cl.**[2] ..... **H01H 9/02**

[58] **Field of Search** ..... 200/333, 304, 293; 29/622, 29/203 B



[56] **References Cited**

UNITED STATES PATENTS

| | | | |
|---|---|---|---|
| 2,795,144 | 6/1957 | Morse | 200/333 X |
| 3,296,404 | 1/1967 | Stevens | 200/302 |
| 3,527,914 | 9/1970 | Spacek | 200/333 |
| 3,778,577 | 12/1973 | Fromknecht et al. | 200/302 |



*Primary Examiner*—Robert K. Schaefer
*Assistant Examiner*—William J. Smith
*Attorney, Agent, or Firm*—Robert W. Beart; Glenn W. Bowen



[57] **ABSTRACT**

A switch in which the U-shaped slide actuator that is employed for each switching stage of the switch fits over the contacts of the switching stage so as to slide back and forth in order to operate the switching stage is disclosed. At each switching stage one of the leads is L-shaped with a contact area, while the other is L-shaped with an S-shaped contact section. In assembly of the switch, a plurality of such leads are formed on a single stamped sheet and the base of the switch is split into two halves, one half of which is molded over one set of leads; and the other half of which is molded over the other set of leads. The leads are then cut away from the remainder of the stamped sheets and the two halves of the base are secured together. A cover may be snapped onto the top of the switch so that automatic insertion equipment can pick up the switch by suction for automatic insertion of the leads of the switch into a printed circuit board.


**2 Claims, 9 Drawing Figures**

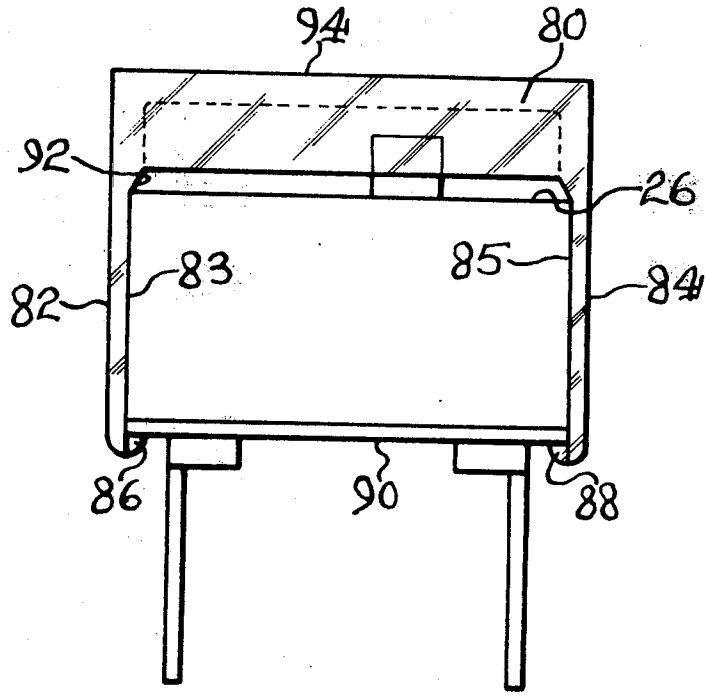

Fig. 1.

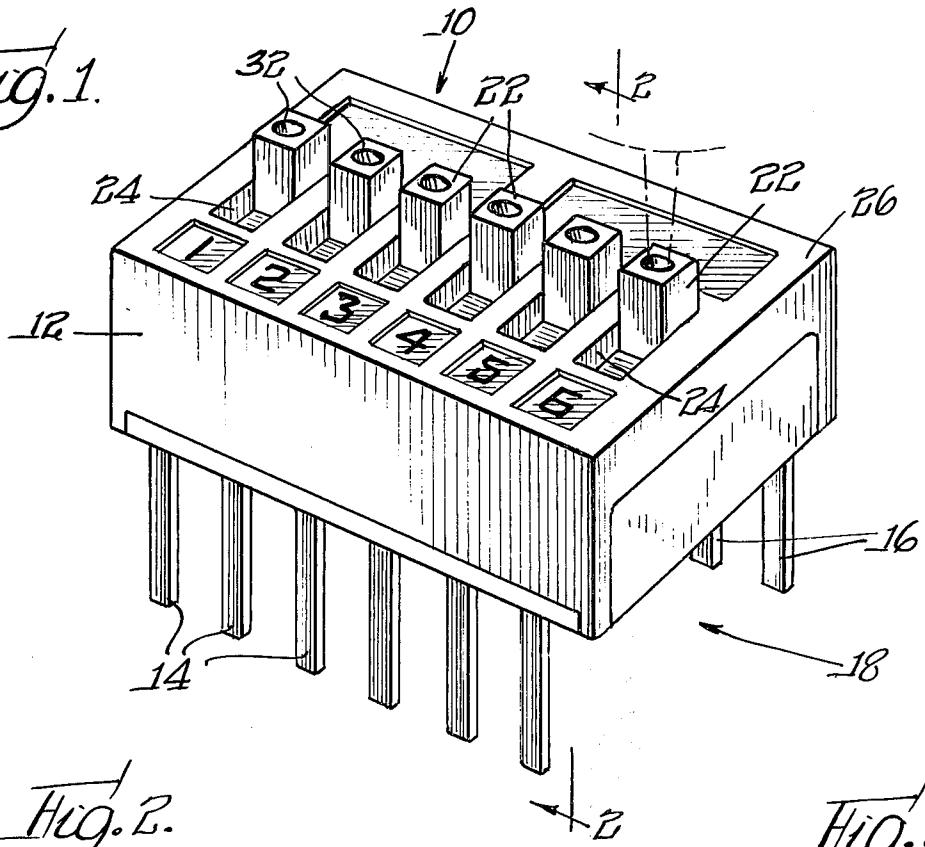


Fig. 2.

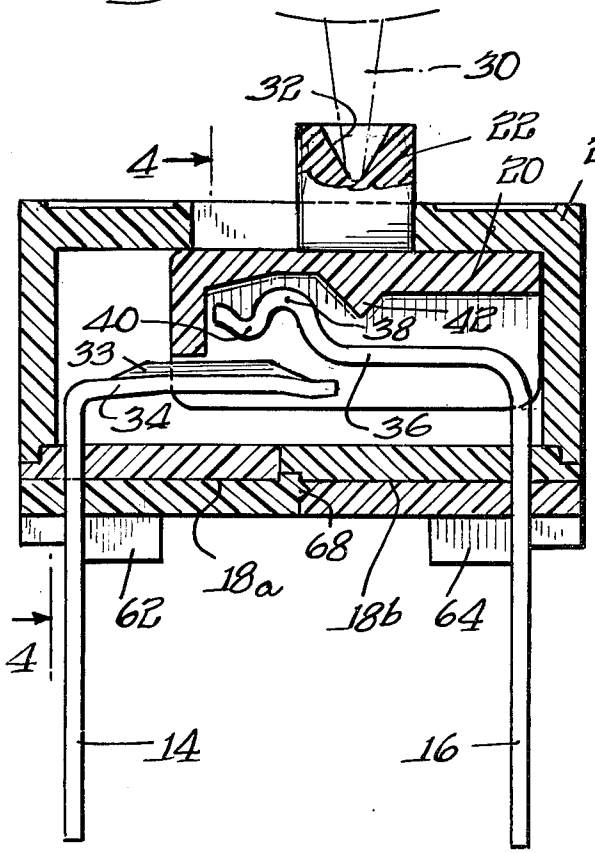


Fig. 3.

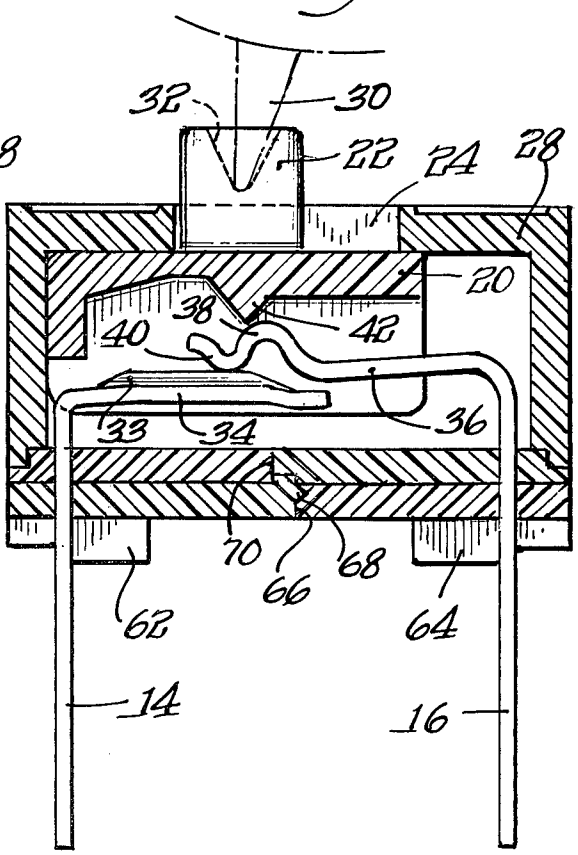

Fig. 4.

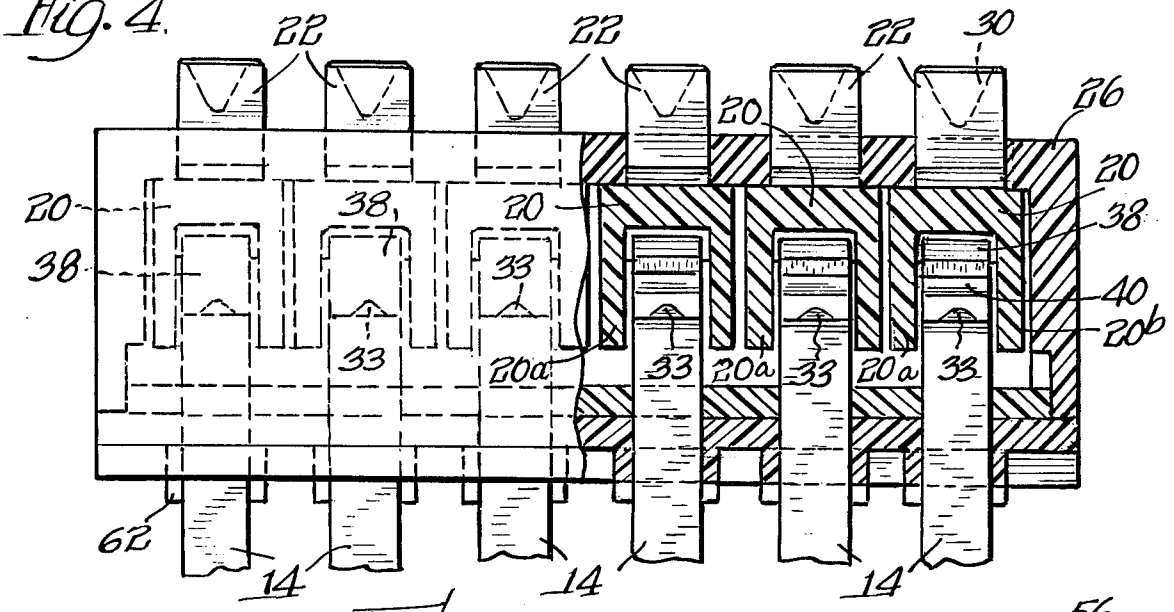


Fig. 5.

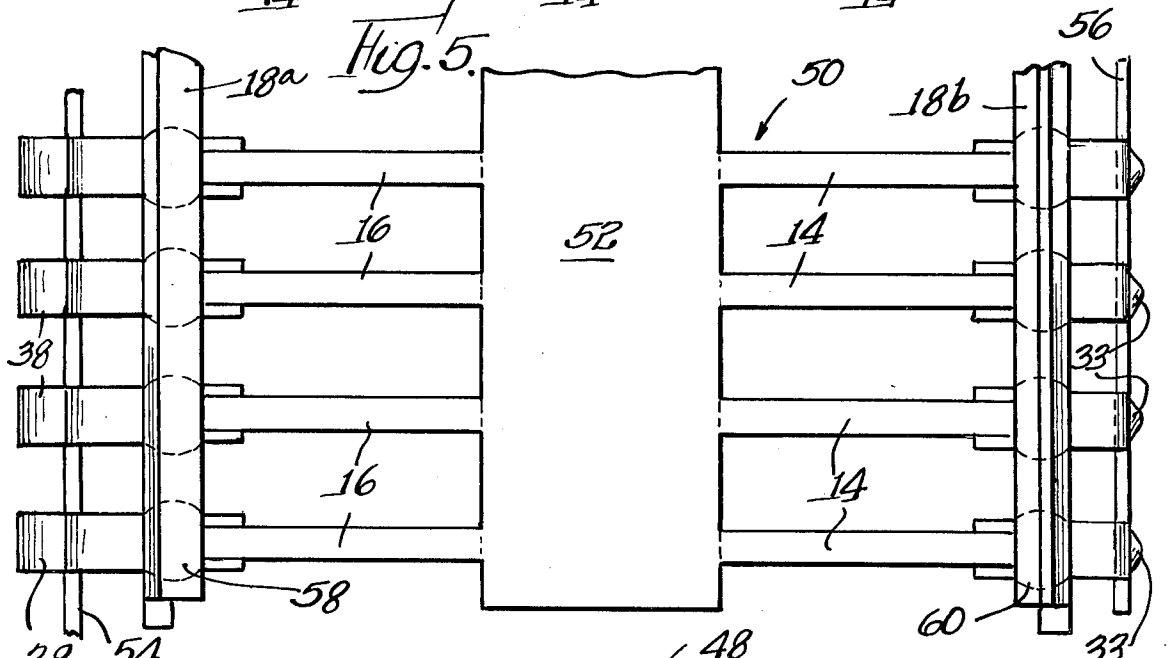


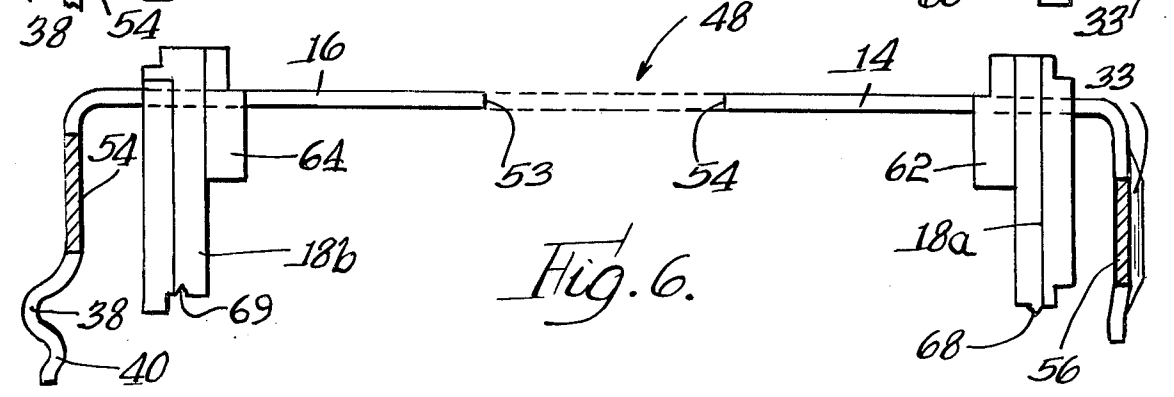


Fig. 6.

Fig. 7

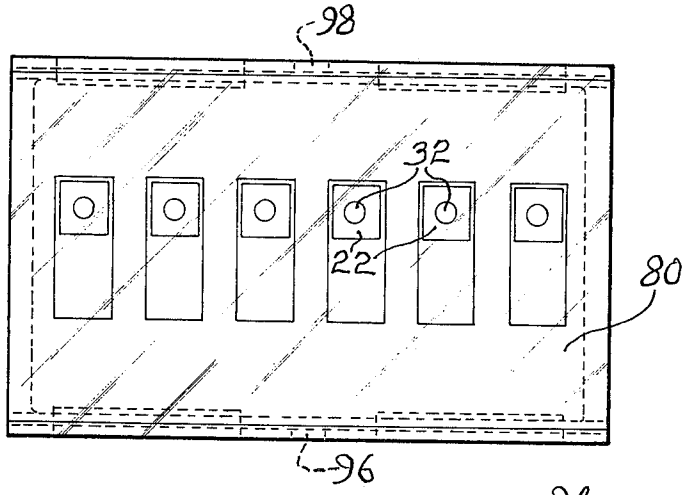


Fig. 8

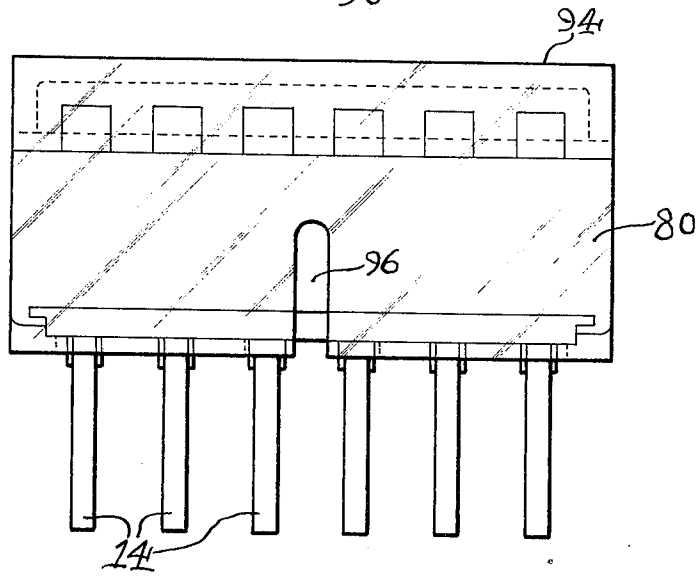


Fig. 9

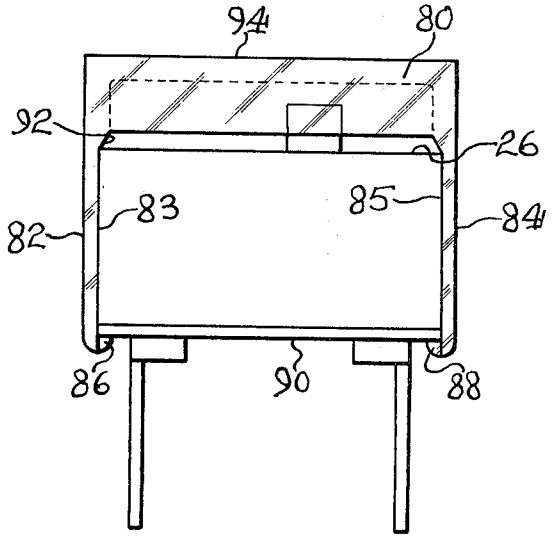

# SLIDE ACTUATED SWITCH

## BACKGROUND OF THE INVENTION

In order to provide microminiature electrical switches with a high reliability at a relatively low cost, a minimum number of parts must be utilized. In a switch constructed in accordance with the present invention, the size of the switch may be maintained very small, although the switch of the present invention may be utilized for much larger applications, if desired. Small size is maintainable in the switch by using a slide actuator, which except for a small extending actuating knob, is housed completely within the housing of the switch. Another factor that assists in maintaining reliability and keeping the size of the switch to a minimum is that the switch utilizes a simple protuberance on the slide actuator for operating the switch. In addition, no spring members are employed in the switch other than the leads.

Although the design of the switch of the present invention may be utilized for a single switching stage, it is especially advantageous for use as a multiple-stage switch, especially in view of its construction which makes it adaptable to a novel method of assembly. In accordance with this assembly method, each pair of L-shaped leads are initially joined to a plate member on a stamped sheet of metal. The base is split into two halves which are each molded over one set of leads. The leads are then cut and the two base halves are placed together and ultrasonically welded or secured by other means to form the completed base structure. A top housing member having apertures in it for guiding the slide actuating member back and forth which fits over the base member to complete the structure of the switch.

The switch disclosed herein is especially adapted for use on a printed circuit board program board for data processing equipment. This type of switch must be small in size and easily actuatable. The switch of the present invention fulfills these requirements. Although, automatic insertion equipment used to insert microcircuit components of similar size and shape into printed circuit boards is ineffective with switches of this type due to a large extent because of the air leakage path provided in the top of these switches around the sliding actuators. The switch of the present invention may be picked up and utilized with this equipment because of the addition of a snap-on cover which fits over the top of the switch.

### Description of the Drawings

FIG. 1 is a perspective view of a multi-stage embodiment of the present invention;

FIG. 2 is a cross-sectional side view of one switch section constructed in accordance with the present invention with the contacts open;

FIG. 3 is a cross-sectional side view of one switch section constructed in accordance with the present invention with the contacts closed;

FIG. 4 is a partial cross-sectional end view showing the position of the slide actuators with respect to the contacts for the switch of FIG. 1;

FIG. 5 is a top view of a multiple-lead stamped sheet and base assembly, with the two halves of the base being molded on the leads prior to construction of the switch;



FIG. 6 is a side view of the multiple-lead and base assembly of FIG. 5;

FIG. 7 is a top view of the switch with the snap-on cover utilized;

FIG. 8 is a side view of the switch with the snap-on cover utilized; and

FIG. 9 is an end view of the switch with the snap-on cover utilized.

### Technical Description of the Invention

Referring to FIG. 1, there is shown an electrical switch **10** constructed in accordance with the present invention that has a number of switching sections which are encased in the same housing **12.** Each switching section of the switch **10** has a resilient first lead **14** and a resilient second lead **16,** the terminal ends of which extend from the base **18** and the upper ends of which form the contact areas for the particular switching stage. Also associated with each switching stage is a slide actuator **20** which has an actuating knob **22** that extends upwardly through an elongated aperture **24** in the top surface of a top housing member **28** for the switch. Large size versions of the switch **10** of FIG. 1 may be actuated by hand; but if the switch is very small, it may be actuated by a driven operating member **30** that is shaped to fit in a small indentation **32** made in the top of the actuating knob **22.**

The leads **14,16** are generally L-shaped and the lead **14** has a contact area **33** on its upper leg **34** while the lead **16** has a contact area **40** on its upper leg **36.** The contact area **40** is actually a downward bend which, along with the upward bend **38,** forms an S-shaped contact section. The contact area **40** contacts the contact area **33** of the lead **14** when the switch is closed. The slide actuator **20** has a general U-shaped configuration with sidewalls **20a** and **20b** that project over the legs **34,36** of the leads **14,16.** The actuator **20** is thereby guided in its back and forth motion by the aperture **24** and by the legs **34,36.** The actuation of the switch **10** is achieved by interaction of a downwardly projecting actuating member **42** formed on the slide **20** which contacts the upward bend **38** to force the downward bend **40** into contact with the contact area **33** when the switch is closed.

When the slide actuator **20** is positioned to the right, as shown in FIG. **2,** the downwardly projecting actuating member **42** is not in contact with the bend **38;** and, therefore, the normally open contact leads **14,16** are not closed. However, when the slide actuator **20** moves to the left, as shown in FIG. **3,** the actuating member **42** comes into contact with the bend **38** forcing the contact leads **14, 16** together to close the switch. In order to cam the actuating member **42** downwardly when the slide actuator is moved toward the left, the upper surface **26** of the housing member **28** is provided with a sloping wall **28** on its under portion, which engages a slight wedge **46** on the slide actuator **20.**

A multiple-stage version of the described switch may be constructed by initially forming a plurality of lead sections **50** on a single stamped sheet metal member **48;** with the base **18** being formed in two separate halves **18***a*, 18*b*, as shown in FIG. **5.** The plurality of leads **14,16** are then bent downwardly, as shown in FIG. **6** and the base halves **18***a*, 18*b* are molded onto the leads **14, 16,** respectively. The leads **14,16** are initially interconnected by the central plate **52** of the stamped member **48** and by the bars **54,56.** As shown

in FIG. 6, the plate 52 and the leads 14,16 then have a general overall C-shaped configuration. Following molding of the base members 18*a*, 18*b* onto the leads 14, 16, the bars 54,56 are removed and the plate 52 is severed along the lines 53,55 in order to separate the individual switching stages or sections of the switch. When the leads 14,16 are molded into the base halves 18*a*, 18*b*, it is desirable that they be formed with enlarged sections 58,60 in order to firmly secure the leads into the base halves.

After the plate 52 and the bars 54,56 have been severed, the base halves 18*a*, 18*b* are supported on a support member (not shown) by the flat surfaces 62,64, with the lefthand edge 66 of the base half 18a being in contact with the righthand edge 70 of the base half 18*b* so that the projection 68 on the base half 18b projects into a corresponding aperture 69 on the base half 18*b*. The base halves 18*a*, 18*b* are then ultrasonically welded or secured together by other suitable means. The housing member 28 is then placed over the assembly and snapped into place so as to form a complete housing assembly.

The switch 10 of the present invention is preferably of a shape and size that is substantially the same as multi-lead microcircuit component packs. Many of these circuit packs are inserted by automatic insertion equipment into printed circuit boards by means of a vacuum pick-up. More efficient use of a programmable switch of a similar size and shape could, thus, be achieved if these switches could be picked up by the suction pick-ups that are used to transport the microcircuit packs so as to achieve automatic insertion of the leads of these switches in the appropriate apertures of the printed circuit boards. However, mechanically actuable programmable switches generally have apertures around their actuators that create leakage air paths that interfere with reliable suction pick up by automatic machines.

In order to overcome this difficulty, a cover 80 constructed of plastics or other suitable material is designed to snap on the switch 10 of the present invention. The cover 80 has resilient legs 82,84 which contact the sides 83,85 of the switch and have feet 86,88 that grip the bottom 90 of the housing of the switch. The cover 80 may abut the top surface 26 of the housing member 28, or it may have a shoulder 92 formed thereon to hold it slightly off the surface 26. Since vacuum pick will be achieved by suction applied to the top, preferably flat, surface 94 of the cover 80 which covers the underlying apertures 24, the slight opening provided at the ends of the switch by the shoulder 92 will prevent pick-up of the switch by a pick-up probe. Slot 96 may be provided approximately midway along the length of the legs 82,84 to increase the flexibility of the legs for easier snapping of the cover 80 on the switch 10, and also to provide for easier removal of the cover from the switch.

The invention is claimed as follows:

1. An electrical switch and cover assembly comprising a housing, a first lead having a first contact area, a second lead having a second contact area which overlaps said first contact area, an electrically insulated slide actuator slidable back and forth in said housing and having a projection thereon which in a first position of the slide actuator is not in contact with either said leads and in a second position of said slide actuator is in contact with said second lead so as to force said second contact area into contact with said first contact area, an aperture in a surface of said housing, an actuating member on said slide actuator which projects through said aperture to allow for external actuation of said switch, a cover for covering said aperture in said surface of said housing so as to substantially seal off leakage air paths associated with said aperture when a suction pick-up means is placed adjacent said apertured surface having snap-on holding means for temporarily securing said cover on said switch which fits over the top of said switch and comprises a pair of resilient legs that contact the sides of the switch and which have feet that grip the bottom of the switch.

2. An electrical switch and cover assembly comprising switching means, a housing for said switching means, a plurality of contact leads positioned to be insertable into the apertures of a printed circuit board, an aperture in the surface of said housing, an actuator for actuating said switching means that projects through said aperture, a cover for covering said aperture in said surface of said housing so as to substantially seal off leakage air paths associated with said aperture when a suction pick-up means is placed adjacent said aperture surface having snap-on holding means for temporarily securing said cover on said switch which fits over the top of said switch and comprises a pair of resilient legs that contact the sides of the switch and which have feet that grip the bottom of the switch.

* * * * *