July 22, 1969 D. L. MIHALICH 3,456,463

FIRE HYDRANT CAP AND KEY

Filed Feb. 7, 1968

4 Sheets-Sheet 1

FIG. 1

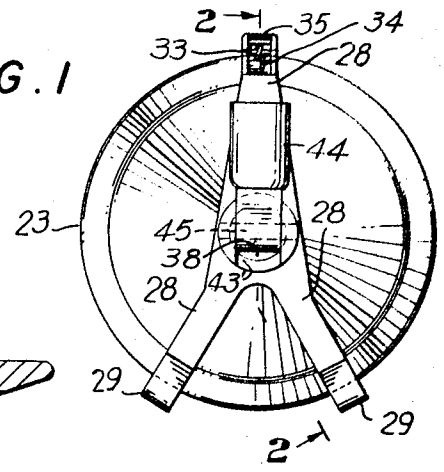

FIG. 2

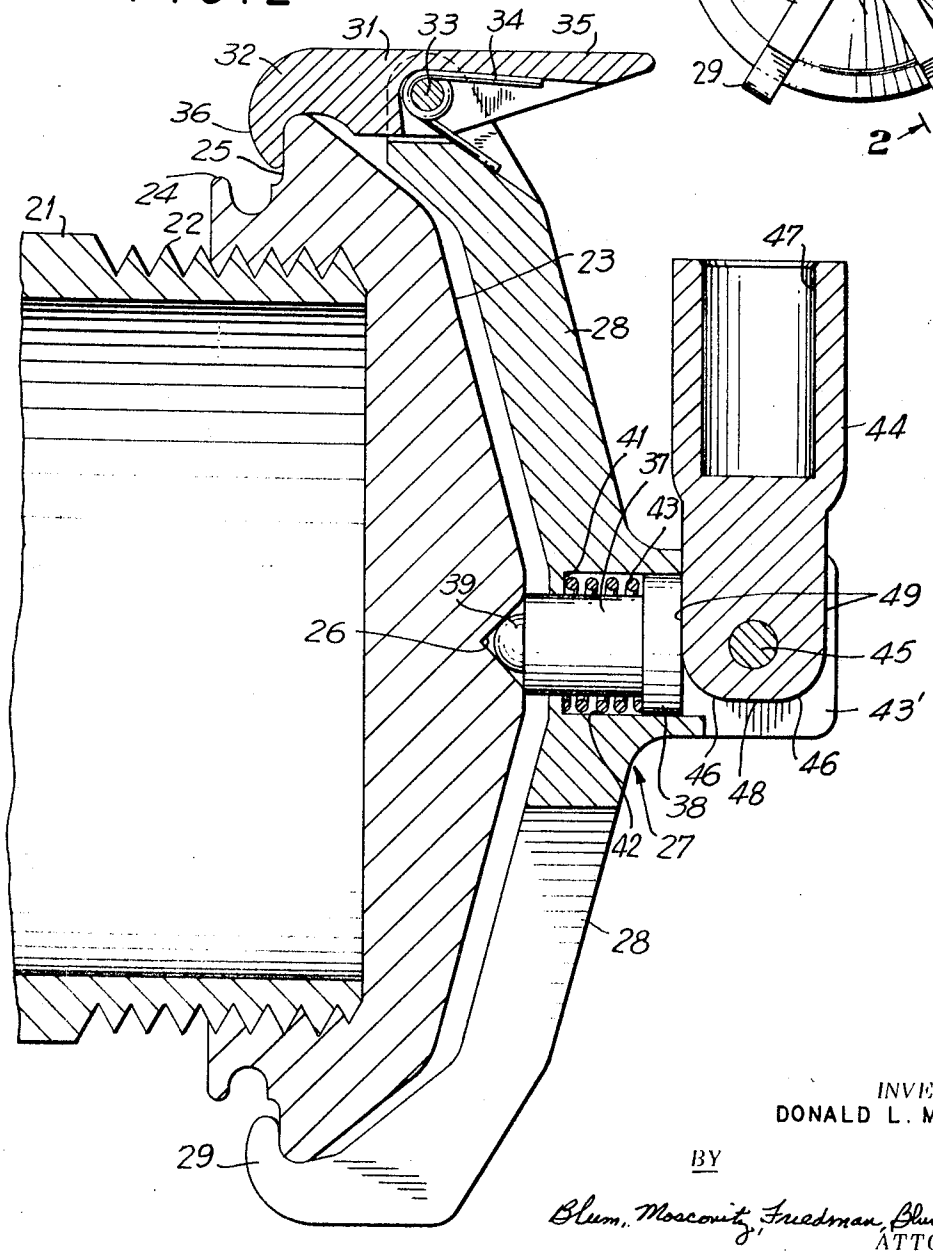

INVENTOR.
DONALD L. MIHALICH

BY

Blum, Moscovitz, Friedman, Blum & Kaplan
ATTORNEYS

July 22, 1969 D. L. MIHALICH 3,456,463

FIRE HYDRANT CAP AND KEY

Filed Feb. 7, 1968 4 Sheets-Sheet 2

FIG. 3

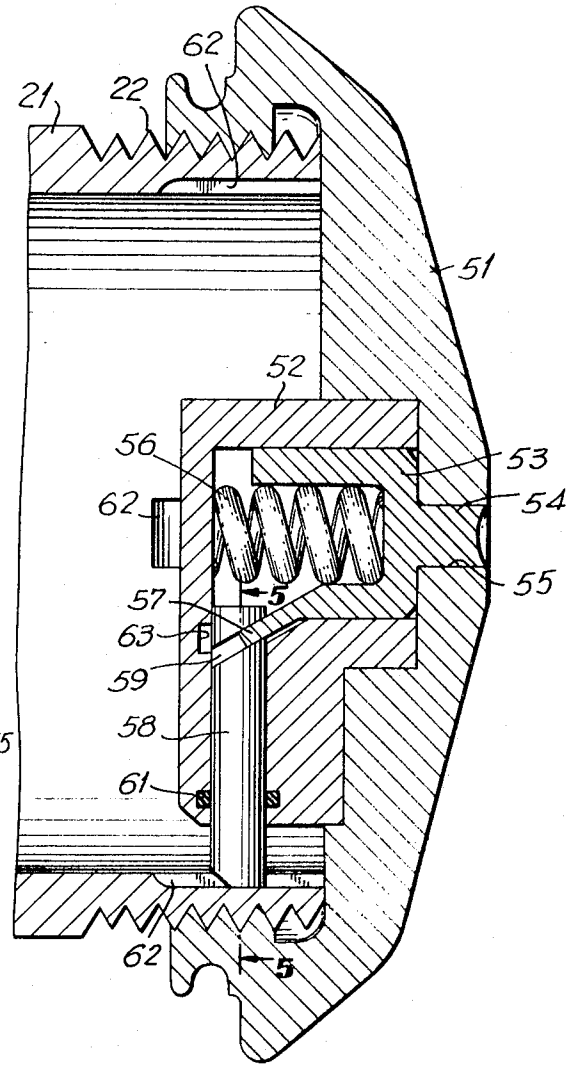

FIG. 4

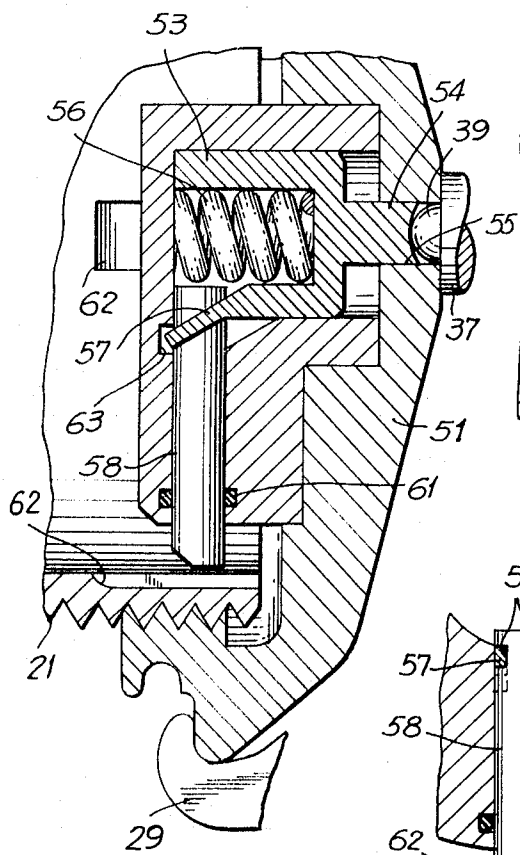

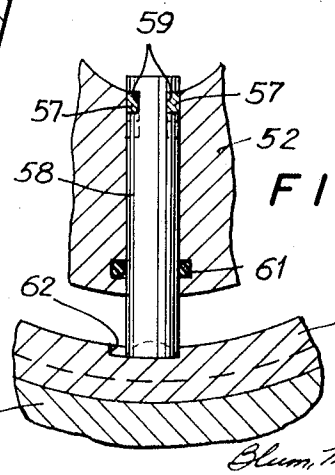

FIG. 5

INVENTOR.
DONALD L. MIHALICH

BY

Blum, Moscovitz, Friedman, Blum & Kaplan
ATTORNEYS

July 22, 1969 D. L. MIHALICH 3,456,463

FIRE HYDRANT CAP AND KEY

Filed Feb. 7, 1968 4 Sheets-Sheet 3

FIG. 6

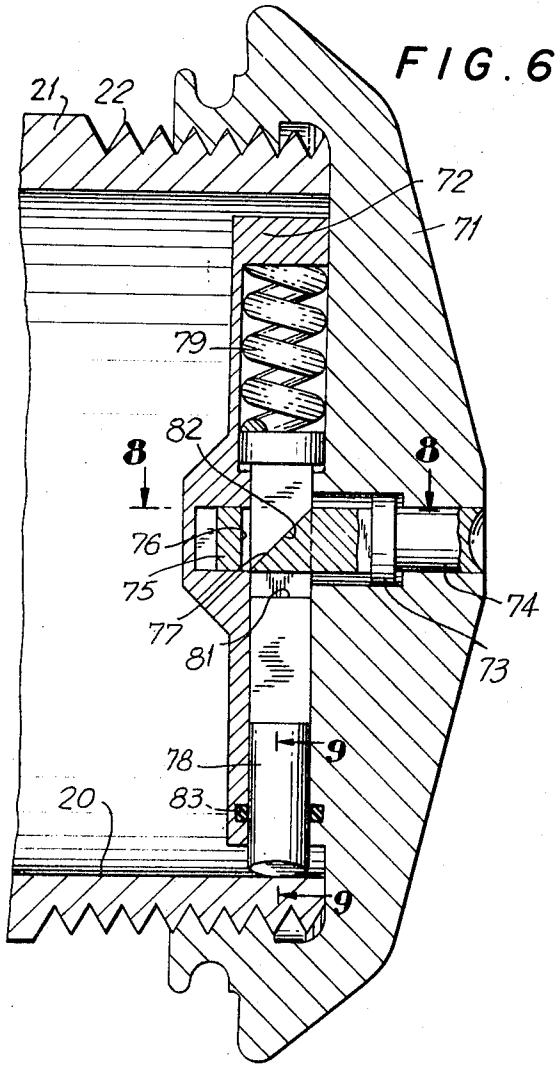

FIG. 7

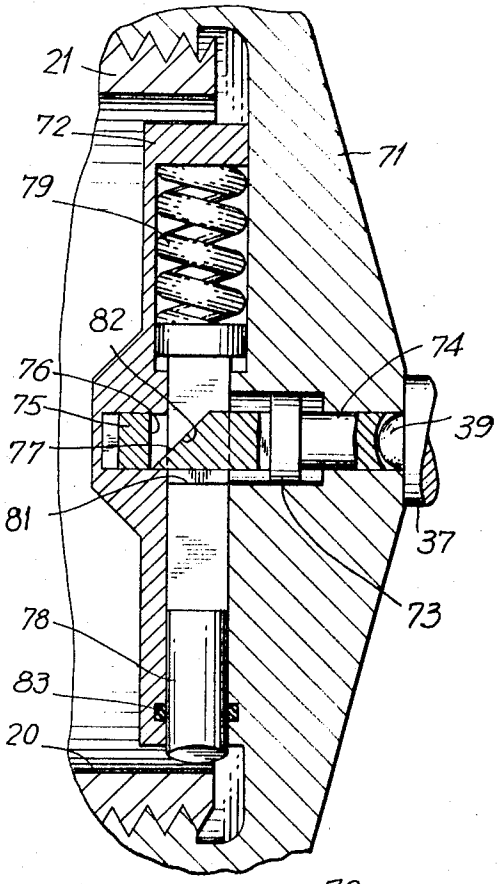

FIG. 8

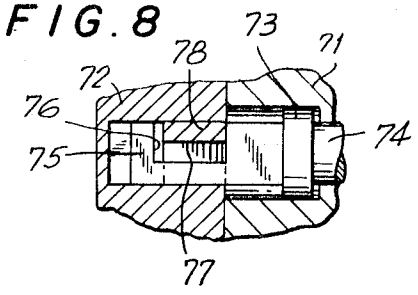

FIG. 9

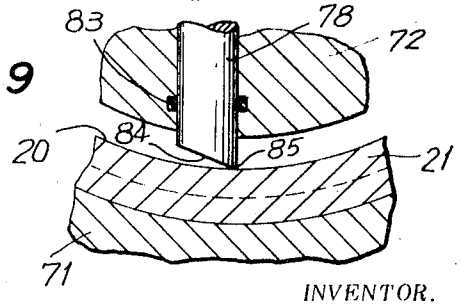

INVENTOR.
DONALD L. MIHALICH

BY

Blum, Moscovitz, Friedman, Blum & Kaplan
ATTORNEYS

July 22, 1969 D. L. MIHALICH 3,456,463

FIRE HYDRANT CAP AND KEY

Filed Feb. 7, 1968 4 Sheets-Sheet 4

FIG. 10

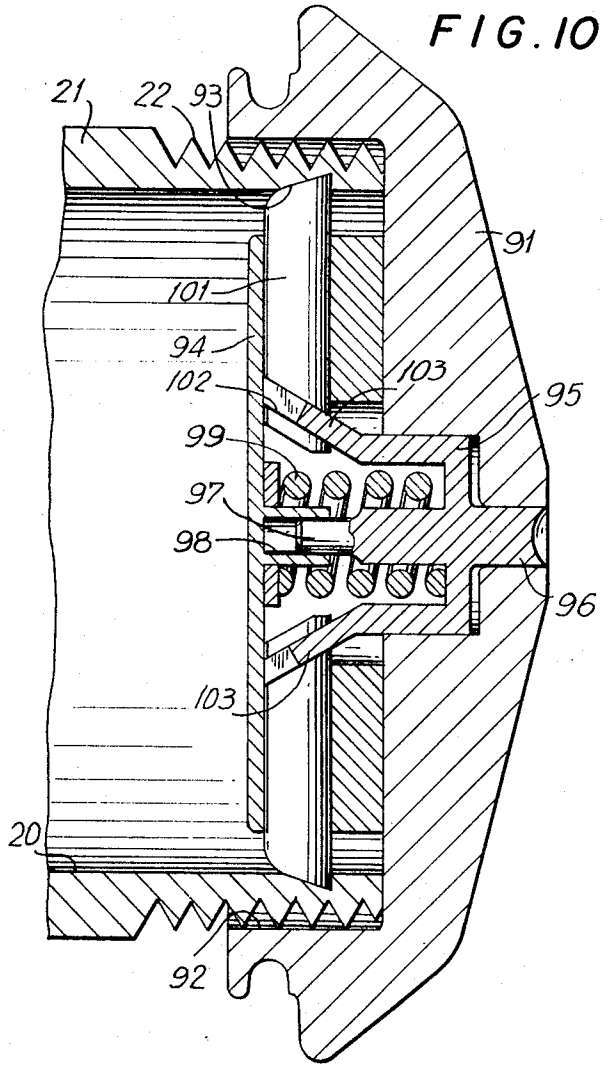

FIG. 11

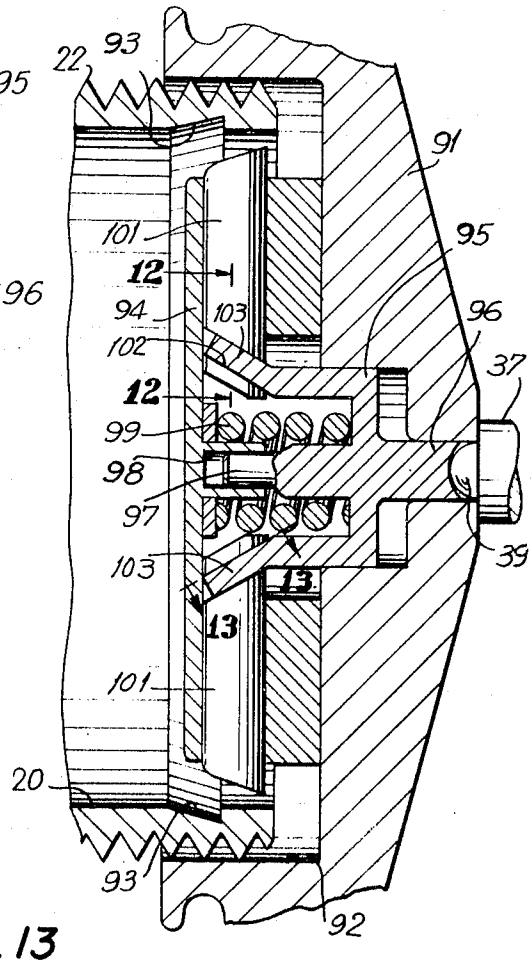

FIG. 12

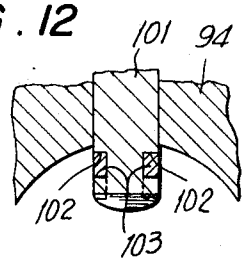

FIG. 13

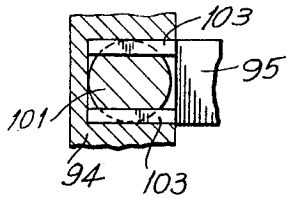

INVENTOR.
DONALD L. MIHALICH

BY

Blum, Moscovitz, Friedman, Blum & Kaplan
ATTORNEYS

United States Patent Office 3,456,463 Patented July 22, 1969

3,456,463

FIRE HYDRANT CAP AND KEY

Donald L. Mihalich, Brooklyn, N.Y., assignor to Lock Cap Corp., New York, N.Y., a corporation of New York

Filed Feb. 7, 1968, Ser. No. 703,632
Int. Cl. A62c 39/00
U.S. Cl. 70—168 9 Claims

ABSTRACT OF THE DISCLOSURE

A cap for a fire hydrant outlet with a smooth outer surface which prevents removal of the cap with standard tools or wrenches and a key especially adapted for gripping and removing the cap.

Background of the invention

The usual type of fire hydrant is provided with a plurality of threaded outlets to which hoses may be connected. A cap is mounted over each outlet for closing off the outlets and a cap is removed when a hose is to be connected thereto. The fire hydrant is also proivded with a valve operated externally of the fire hydrant by a standard wrench and in order to draw water from the fire hydrant, it is necessary to both open the valve and remove a cap from one of the outlets.

Unauthorized use of fire hydrants during hot weather is a common occurrence and such uses are wasteful of water and cause a drop in water pressure in the system which feeds the fire hydrant. Unauthorized uses have generally been possible since, with the prior art constructions, the fire hydrant valve can be operated and one or more caps removed by means of tools and wrenches commonly available to members of the general public.

Summary of the invention

Generally speaking, in accordance with the invention, specially designed fire hydrant caps are provided which have smooth external surfaces which cannot readily be gripped by tools and wrenches available to the general public and special keys are provided for the caps so that firemen can remove the caps when required. The special keys will not be commonly available hardware items and thus can be made available to Fire Departments only, thereby substntially cutting down on the unauthorized use of fire hydrants.

Accordingly, it is an object of this invention to provide a cap for a fire hydrant outlet which cannot be removed using standard tools or wrenches and to provide a special key by which the cap may be removed.

Another object of the invention is to provide a cap for a fire hydrant outlet which locks on to the outlet and can be removed only by means of a special key.

A further object of the invention is to provide an improved key for removing a fire hydrant cap having a smooth outer surface.

Still other objects and advantages of the invention will in part be obvious and will in part be apparent from the specification.

The invention accordingly comprises the features of construction, combinations of elements, and arrangement of parts which will be exemplified in the constructions hereinafter set forth, and the scope of the invention will be indicated in the claims.

Brief description of the drawings

For a fuller understanding of the invention, reference is had to the following description taken in connection with the accompanying drawings, in which:

FIG. 1 is an end elevational view of a fire hydrant cap and key constructed in accordance with a perferred embodiment of the instant invention; FIG. 2 is a partial sectional view, at an enlarged scale, taken along line 2—2 of FIG. 1;

FIG. 3 is a view similar to FIG. 2, with the removal key omitted, of a cap constructed in accordance with a second embodiment of the instant invention;

FIG. 4 is a partial sectional view of the apparatus of FIG. 3 in a released position with a removal key partially shown;

FIG. 5 is a partial sectional view taken along line 5—5 of FIG. 3;

FIG. 6 is a view similar to FIG. 3 showing a further embodiment of the instant invention;

FIG. 7 is a partial view of the apparatus of FIG. 6 with the locking mechanism in a cap release position, with the cap removal key being partially shown;

FIG. 8 is a partial sectional view taken along line 8—8 of FIG. 6;

FIG. 9 is a partial sectional view taken along line 9—9 of FIG. 6;

FIG. 10 is a view similar to FIG. 3 showing yet another embodiment of the instant invention;

FIG. 11 is a partial view of the apparatus of FIG. 10 showing the locking members in cap removal position and showing a portion of the removal key;

FIG. 12 is a partial sectional view taken along line 12—12 of FIG. 11; and

FIG. 13 is a partial sectional view taken along line 13—13 of FIG. 11.

Description of the preferred embodiments

Referring now to FIGS. 1 and 2, a fire hydrant outlet 21 has an externally threaded end 22. The outlet and threaded end are standard with the fire hydrants currently in use with the size of the outlet depending on ultimate factors of water volume and pressure. The usual multiple outlet fire hydrant has at least two sizes of outlets and the instant invention is applicable to outlets, regardless of the size. Threaded over outlet 21 is a dome shaped cap 23 having an axially extending skirt 24 extending from an annular shoulder 25 which acts as a gripping surface, as will be hereafter explained. An indent 26 is provided in the central outer surface of the dome shaped cap.

The key for removing the cap is indicated generally at 27 and includes three arms 28, two of which terminate in hook ends 29 which bear on annular shoulder 25 when the key is in position on the cap. Pivoted to the end of the third leg 28 is a lever 31 having a hook end 32 for bearing on annular shoulder 25. The lever 31 is pivoted to arm 28 by means of a pivot pin 33 and a spring 34 acts between the lever and arm 28 to bias hook end 32 inwardly or toward hook ends 29. Lever 31 extends beyond pivot pin 33 away from hook end 32 to provide a handle 35 through which lever 31 may be rotated against the biasing action of spring 34 in order to permit removal of key 27 from the cap. The outer end of hook end 32 is rounded as at 36 to provide a bearing surface which will bear against the dome shaped surface of cap 23 and cam lever 31 in a clockwise direction as shown in FIG. 2 when it is desired to mount the key on the cap after hook ends 29 have been placed in the position shown in FIG. 2. In other words, the key may be snapped onto the cap and removed therefrom by rotating lever 31 through handle 35. By providing at least three legs 28 on the key, the key will remain on the cap as long as is desired.

Slidably mounted in the center of the key at the junction of arms 28 is a pin 37 having a shoulder 38 at one end and a dome 39 at the other end. Surrounding pin 37

and bearing between shoulder 38 and a shoulder 41 at the bottom of a bore 42 in the key is a spring 43 biasing the pin in a direction to withdraw same into bore 42. A pair of plates 43' extend upwardly from the center of the key and receive therebetween a lever 44 pivoted to the plates by means of a pin 45. The lower corners of lever 44 are rounded to provide a cam surface 46 adapted to bear against the outer surface of pin 37 above shoulder 38. A bore 47 is provided in lever 44 for insertion of a rod to provide a mechanical advantage. The cam surface at the lower end of lever 44 as indicated at 48 is closer to the center of pin 45 than the surfaces indicated at 49 whereby a camming operation of pins 37 is effected by a rotation of lever 44 about pin 45. When surface portion 48 is against the pin, the pin may withdraw into bore 42 by means of spring 43 thereby eliminating pressure against cap 23 by dome 39. In this position, the key may be mounted on or removed from the cap. Once the key has been mounted on the cap, lever 44 is rotated to bring either of surfaces 49 into engagement with the outer surface of pin 37 thereby driving and forcing dome 39 against the cap and applying a gripping force to the cap through dome 39, hook ends 29 and hook end 32. As a result of the camming action, a substantial locking force can be applied to the cap and through a bar inserted in bore 47, the key and cap can be rotated to unscrew the cap or to screw the cap on to the fire hydrant outlet if it has been previously removed. With the key dismounted, the cap is nothing but a smooth surfaced dome which cannot be gripped by tools or wrenches normally available to members of the general public. The cap can be removed only by means of a key such as the key described above. If desired, one or more of the inner surfaces of the hook ends can be serrated to improve the gripping action where the hook ends bear against annular shoulder 25.

Referring now to FIGS. 3 through 5, a cap 51 having the general dome shaped configuration of the cap previously described, has a locking device incorporated therein which must be released before the cap can be removed using key 27. A support block 52 is secured to the interior of cap 51 and has a release plunger 53 slidably mounted therein. A neck portion 54 extends outwardly through a bore 55 in the cap and the release plunger is biased outwardly by means of a spring 56. The release plunger includes a pair of bifurcated, inclined fingers 57 which receive therebetween a lock pin 58 slidably mounted in support block 52. The lock pin is provided with a pair of oppositely disposed grooves 59 which receive fingers 57. The lock pin has a generally circular cross-sectional configuration and an O-ring 61 mounted in the support block seals around the lock pin to prevent water from traveling along the lock pin and into the support block. The internal wall of fire hydrant outlet 21 is provided with a plurality of axially extending grooves 62 for receiving the end of lock pin 58.

The locked position of the cap is shown in FIGS. 3 and 5 wherein the cap is threaded onto the outlet and lock pin 58 is biased outwardly to be received in one of grooves 62. As shown in FIG. 5, relative rotation between the cap and the fire hydrant outlet is prevented by engagement of lock pin 58 in groove 62. Pin 58, in the FIGS. 3 and 5 position is biased outwardly by spring 56 acting on release plunger 53 and the cooperation between inclined fingers 57 and grooves 59.

When it is desired to remove the cap, a key 27 similar to the key described in connection with FIGS. 1 and 2 is mounted on cap 58 with portions of the key being shown in FIG. 4. When pin 37 is advanced by the camming action of lever 44, dome 39 acts against neck portion 54 to depress release plunger 53 against the action of spring 56 as shown in FIG. 4. The depression of the release plunger advances the bifurcated inclined fingers 57 in the axial direction thereby causing lock pin 58 to be withdrawn from groove 62 as appears in FIG. 4. A pocket 63 may be provided in support block 52 to permit entry of the ends of fingers 57 when the release plunger is depressed. After lock pin 58 has been withdrawn as shown in FIG. 4, cap 51 may be freely rotated by use of the key which grips same to remove the cap. Replacement of the cap is accomplished by mounting the key on the cap so that lock pin 58 is in its withdrawn position, threading the cap onto the fire hydrant outlet and rotating same until the cap is securely in position and lock pin 58 is aligned with one of grooves 62 and thereafter removing the key permits the release plunger to be biased outwardly by the action of spring 56 causing lock pin 58 to be advanced into groove 62.

With a cap constructed as shown in FIGS. 3 through 5, the cap cannot be removed merely by gripping the surface thereof and thus even if an unauthorized user were able to obtain a tool that would grip the surface of the cap, he would be unable to remove the cap unless he could also effect a withdrawal of the lock pin.

Another embodiment of a cap having a lock pin is shown in FIGS. 6 through 9. In this construction, the lock pin will wedge itself into the inside surface of the fire hydrant outlet thereby eliminating the need for the grooves in the wall of the outlet as required by the FIGS. 3 through 5 construction. Thus, the cap of the FIGS. 6 through 9 construtcion can be mounted on current fire hydrant outlets.

Cap 71 has a support block 72 mounted internally thereof with a release plunger 73 slidably mounted within the cap and support block. The release plunger includes a neck portion 74 exposed through a cetntral opening in the dome shaped cap and a body portion 75 cut-away as at 76 to provide an inclined cam surface 77. A radially directed lock pin 78 is slidably mounted in support block 72 and biased outwardly by means of a spring 79. Lock pin 78 crosses and overlaps release plunger 73 and is cut-away as at 81 to provide a cam surface 82 which engages with cam surface 77 in sliding contact therewith.

Lock pin 78 projects toward the interior wall 20 of fire hydrant outlet 21 through an O-ring seal 83. Lock pin 78 has an inclined outer end 84 which defines a sharp edge 85 for making contact with the interior wall 20 of the fire hydrant outlet. See FIG. 9. When the cap is on the fire hydrant outlet as shown in FIGS. 6 and 9, spring 79 biases the lock pin into engagement with the interior wall of the outlet. Sharp edge 85 tends to bite into the surface of the interior wall thereby arresting rotation of the cap in the counter-clockwise (removal) direction shown in FIG. 9. Biting action is aided by the fact that fire hydrants are fabricated by casting and have a generally rough interior wall. Due to the incline 84, rotation of the cap in the tightening (clockwise) direction is not impeded.

In order to remove the cap shown in FIGS. 6 through 9, a key similar to that shown in FIGS. 1 and 2 is mounted on the cap and pin 37 is cammed against the surface of the cap as the key securely grips the cap. Dome 39 depresses release plunger 73 thereby moving cam surface 77 inwardly and forcing realtive movement of cam surface 82 to retract lock pin 78 against the action of spring 79 and withdraw sharp edge 85 from locking engagement with the interior wall of the fire hydrant outlet. Once the lock pin has been withdrawn, the key can be used to rotate the cap and unthread it from the outlet. For replacement of the cap, the key is used to grip the cap and retract the lock pin. Once the cap has been tightly threaded onto the fire hydrant outlet uisng the key, the key is removed thereby permitting the lock pin to be advanced into locking engagement with the interior wall of the outlet by means of spring 79.

The construction just described has advantages similar to the FIGS. 3 through 5 construction in that a special key must not only be able to grip the smooth surface, dome shaped cap but must also be able to depress and release the locking device. The construction shown in FIGS. 6

through 9 has the added advantage that the interior surface of the fire hydrant outlet need not be provided with grooves thus making the cap operable on standard outlets and permitting the cap to be locked in substantially any position.

The cap disclosed in FIGS. 10 through 13 is adapted for use with an internally grooved fire hydrant outlet with the cap construction eliminating the need for threading the cap on to the outlet. Thus, the internal wall of cap **91** is devoid of threads as indicated at **92**. The interior wall **20** of the outlet is provided with a groove **93**.

A support block **94** is secured to cap **91** and slidably mounted between the cap and the support block is a release plunger **95**. The release plunger has a neck portion **96** exposed through the center of the dome shaped cap and a guide pin **97** slidably received in a tube **98** carried by the support block whereby the release plunger is mounted for sliding movement in a direction axially of the fire hydrant outlet. A spring **99** surrounds tube **98** and acts against release plunger **95** to bias the release plunger outwardly. A plurality of lock pins **101** are slidably mounted within support block **94** radially of the central longitudinal axis of the cap which is coincident with the sliding axis of the release plunger. In the embodiment disclosed, four lock pins are provided but the number may be varied as desired. Each lock pin is provided, at the rear end thereof, with a pair of inclined grooves **102** disposed in parallel relationship on opposite sides of the lock pin (see FIG. 12). For each lock pin, the release plunger is provided with a pair of bifurcated inclined fingers **103**, one finger being received in each of grooves **102**. The bifurcated fingers span the lock pin as shown in FIG. 13.

The locked position of cap **91** is shown in FIG. 10 in which the cap is fitted over the fire hydrant outlet and lock pins **101** are received in groove **93**. The lock pins are held in the outward position by the cooperation between inclined fingers **103** and inclined grooves **102** and the outward biasing of the release plunger bias spring **99**. When it is desired to remove cap **91**, a key such as the key shown in FIGS. 1 and 2 is mounted on the cap and pin **37** through dome **39** depresses release plunger **95** to effect a withdrawal of lock pins **101** to the FIG. 11 position whereby the lock pins are removed from groove **93** and the cap may be removed from the fire hydrant outlet by pulling same in the axial direction. The cap is shown in a partly removed position in FIG. 11.

The invention described above relates to a cap and key arrangement or system which will substantially reduce the unauthorized use of fire hydrants. One embodiment of a removal key and several embodiments of caps have been discloesed with each cap having a smooth, dome shaped outer surface to prevent it from being gripped by commonly available tools and wrenches and a shoulder for mounting of the key thereon and gripping of the cap by means of the key.

It will thus be seen that the objects set forth above, among those made apparent from the preceding description, are efficiently attained and, since certain changes may be made in the above constructions without departing from the spirit and scope of the invention, it is intended that all matter contained in the above description or shown in the accompanying drawings shall be interpreted as illustrative and not in a limiting sense.

What is claimed is:

1. A cap and key for a fire hydrant, said cap comprising a substantially dome shaped element having a smooth outer surface, an annular shoulder having an outer surface portion on said dome shaped element, the outer surface portion of said annular shoulder facing substantially oppositely from the smooth outer surface of said dome shaped element, and a bearing surface on said smooth outer surface of said dome shaped element at substantially the center thereof, said key comprising a plurality of arms for spanning the smooth outer surface of said dome shaped element, hook means at the end of each arm for engagement with the outer surface portion of the annular shoulder, a pin slidably mounted centrally of said arms, said pin having a bearing surface for engagement with the bearing surface of said dome shaped element, and cam means acting on said pin for locking said key onto said cap.

2. The combination as claimed in claim **1** wherein one of said arms includes a lever, said hook means of said one arm forming part of said lever, means pivoting said lever to said one arm, and spring means acting between said lever and said one arm for biasing said hook means on said lever in a direction toward the other of said hook means.

3. The combination as claimed in claim **1** wherein said key is provided with a central portion, said arms radiating outwardly from said central portion, said pin being slidably mounted in said central portion, said cam means being pivoted to said central portion in engagement with said pin and including a lever for operation thereof.

4. The combination as claimed in claim **1** wherein an indent is provided in said cap within the bearing surface thereof and said bearing surface of said pin includes a projection for extending into said indent.

5. The combination as claimed in claim **4** and further including a release plunger slidably mounted in said cap and having a portion thereof exposed through said indent and engageable by said projection on said pin, at least one lock pin mounted in said cap and slidable with respect thereto in a direction substantially perpendicular to the direction of a slidable mounting of said release plunger and means cooperating between said lock pin and said release plunger for effecting movement of said lock pin away from its locking position upon depression of said release plunger by said projection on said pin in said key.

6. The combination as claimed in claim **5** wherein said last named means includes at least a pair of bifurcated inclined fingers on said release plunger and oppositely disposed inclined grooves in said lock pin receiving, in slidable relationship, said bifurcated inclined fingers.

7. The combination as claimed in claim **6** and further including spring means acting on said release plunger for biasing said release plunger outwardly toward the smooth outer surface of said dome shaped element.

8. The combination as claimed in claim **5** wherein said last named means includes means defining a cam surface on said release plunger and means defining a cam surface on said one lock pin, said cam surfaces being in sliding engagement, one with another, for movement of said one lock pin away from its locking position when said release plunger is depressed by engagement with said projection on said pin in said key.

9. The combination as claimed in claim **8** and further including spring means acting on said lock pin for biasing said lock pin for movement in a locking direction.

References Cited

UNITED STATES PATENTS

1,473,408	11/1923	Richardson	292—258 X
1,837,881	12/1931	Modra	70—162 X
3,379,209	4/1968	Spiselman	137—296

RICHARD E. MOORE, Primary Examiner

EDWARD J. McCARTHY, Assistant Examiner

U.S. Cl. X.R.

137—296; 220—55