Nov. 19, 1940. A. A. MARTIN 2,222,317

HAIR CUTTING INSTRUMENT

Filed April 3, 1937 2 Sheets-Sheet 1

Fig. 1.

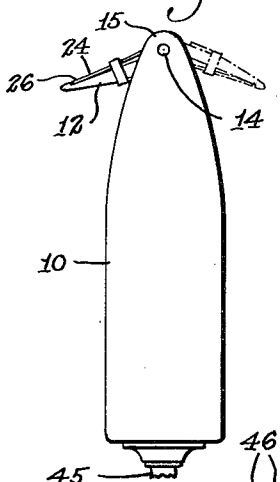

Fig. 2.

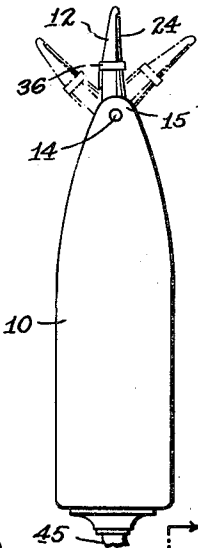

Fig. 5.

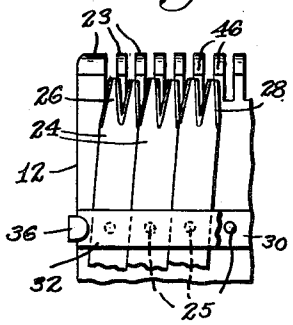

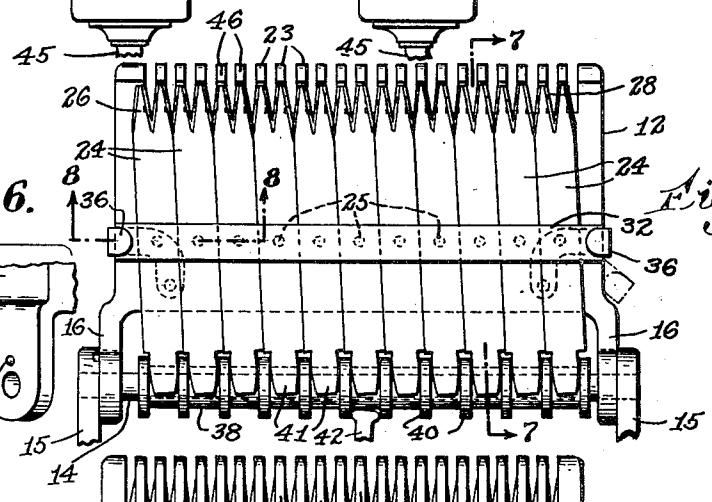

Fig. 6.

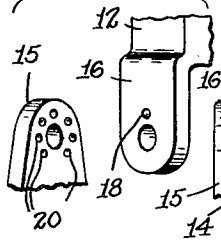

Fig. 3.

Fig. 4.

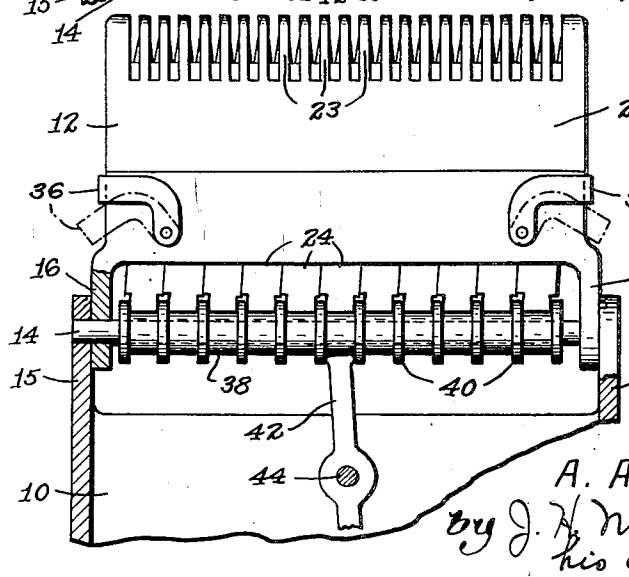

Inventor
A. A. MARTIN
by J. H. McCready,
his attorney

Nov. 19, 1940. A. A. MARTIN 2,222,317

HAIR CUTTING INSTRUMENT

Filed April 3, 1937 2 Sheets-Sheet 2

Fig. 7.

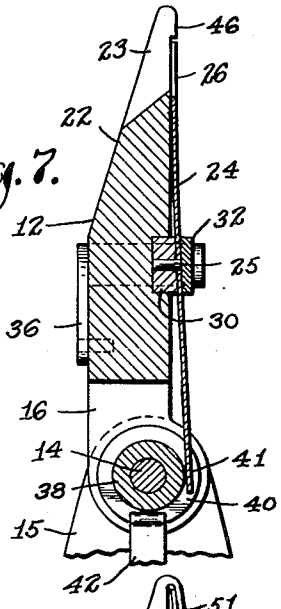

Fig. 8.

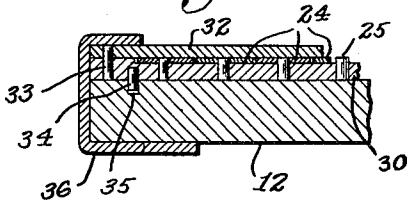

Fig. 9.

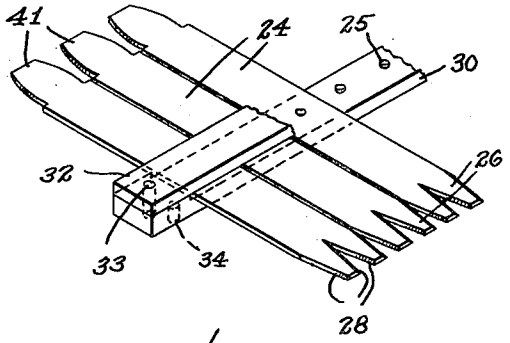

Fig. 10.

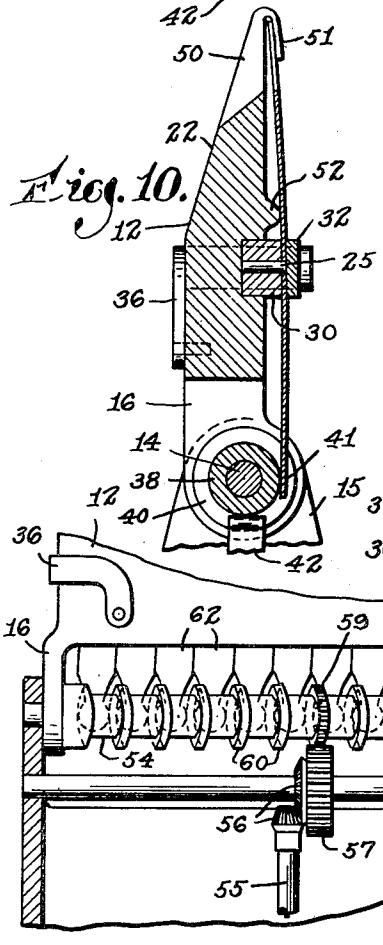

Fig. 11.

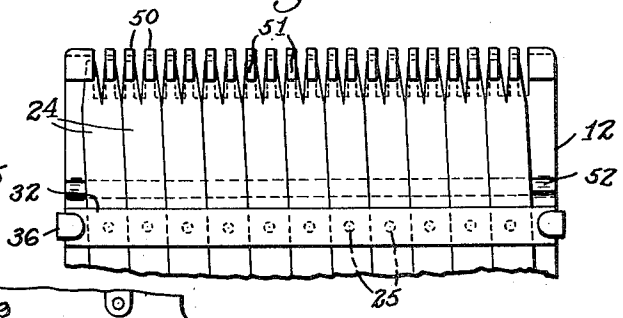

Fig. 12.

Inventor
A. A. MARTIN
by J. K. McCready,
his attorney

Patented Nov. 19, 1940

2,222,317

UNITED STATES PATENT OFFICE

2,222,317

HAIR CUTTING INSTRUMENT

Angus A. Martin, Dorchester, Mass.

Application April 3, 1937, Serial No. 134,823

13 Claims. (Cl. 30—43)

This invention relates to hair cutting instruments of the clipper type wherein a plurality of cooperating teeth or shearing edges engage and sever the hair therebetween. Hair cutting clippers operating on this principle have been known and in use for years, and closer cutting instruments commonly known as "dry shavers" have more recently come into use. While these latter instruments cannot sever the hair at the skin surface as is done with the razor employing a single continuous cutting edge, they do, by employing relatively thin guard teeth, sever the hair closely adjacent to such surface. It will be understood that it is desirable to sever the hair as closely as possible since the character of the shave depends upon this approximation. One object of my invention is the production of an improved instrument of this nature which will shave closer than other like instruments heretofore known.

These clipper type instruments employ a stationary toothed member and cooperating therewith is a toothed member arranged to have a relative shearing movement. In accordance with the preferred embodiment of my invention, the movable shearing member comprises a plurality of relatively thin, normally flat and resilient sheet metal blades having shearing edges adjacent to their free ends for cooperating with the stationary teeth, and one arrangement is such that the blades engage against the surface being shaved and sever the hair very closely thereto.

My improved shearing blades are furthermore constructed in the form of a compound blade unit and the instrument is arranged to permit ready and convenient insertion and removal of this unit. The movable shearing element of my improved instrument is therefore not only constructed most economically from blade stock and adapted to give a relatively close shave, but this element can also be conveniently removed for cleaning and can be replaced with a new element at little expense whenever necessary or desirable.

A further feature of my invention resides in so adjustably mounting the blade carrying head on the body of the instrument that the head can be placed in different angular positions to serve the convenience of the user. The instrument is furthermore constructed to serve, at the option of the user, either for clipping or shaving. In one position of the head the blade carrying face thereof is exposed for engagement with the face of the user for shaving and in another position the other face of the head is exposed for engaging with a surface to be clipped. Means, preferably including a motor carried by the instrument, is provided for operating the shearing blades transversely of the stationary teeth, and, in the preferred form of the invention as herein illustrated, the blades are mounted for pivotal shearing movement, a further form of the invention being disclosed in my U. S. Letters Patent No. 2,217,760 dated October 15, 1940.

These and other features of the invention will be best understood and appreciated from the following description of a preferred embodiment thereof selected for purposes of illustration and shown in the accompanying drawings in which,

Fig. 1 is a side elevation of a hair cutting instrument comprising my invention,

Fig. 2 is a like view showing the cutting head in another position,

Fig. 3 is a fragmentary face view of the shaving side of the head,

Fig. 4 is a like view of the clipping side of the head,

Fig. 5 is a fragmentary view of Fig. 3 showing the blades in another position,

Fig. 6 is a fragmentary view showing a detent form holding the head in different positions of adjustment,

Fig. 7 is a sectional view taken on line 7—7 of Fig. 3.

Fig. 8 is a fragmentary section view taken on line 8—8 of Fig. 3,

Fig. 9 is a fragmentary perspective view of the compound blade unit,

Fig. 10 is a view like Fig. 7 but showing a modified form of the invention,

Fig. 11 is a fragmentary face view of Fig. 10,

Fig. 12 is a fragmentary view of a modified form of blade operating mechanism.

Referring first to the form of my invention illustrated in Figs. 1–9, 10 indicates a body member on which is supported a cutting head or comb plate 12. The head is mounted for pivotal adjustment on a pintle 14 carried by and extending between two spaced lugs 15 projecting from the front end of the member 10, the two supporting lugs 16 of the head being in contact with the inner faces of the lugs 15. The head is held in various positions of pivotal adjustment, indicated by broken lines in Figs. 1 and 2 by means of a detent 18 carried by one of the lugs 16 and cooperating with depressions 20 in the adjacent lug 15. The front face of the head 12 is substantially flat while the rear face is bevelled off at 22 to comb teeth 23 formed on the forward and free

end of the head. Cooperating with the comb teeth are a plurality of blades 24 pivoted at 25 and having their forward ends 26 pressed into contact with the comb teeth. The blades are adapted to be oscillated on the pivots 25 in a manner causing their ends to move across the comb teeth and shear the hair therebetween.

For various reasons hereinafter described, I prefer to construct the blades 24 from sheet metal stock similar to that used in flexible safety razor blades and I furthermore prefer to mount all the blades in a holder and in a manner providing a blade unit which can be readily placed on and removed from the head 12. Each blade is substantially of rectangular outline and has its forward end engaged to provide two shearing teeth at 26 and the opposed edges of these teeth are bevelled at the outer face of the blade at 28 to provide shearing edges therealong at the inner face of the blade which contacts with the comb teeth 23.

The blade unit comprises a bar 30 carrying pivot pins 25 over which the blades are engaged. The blades are located closely adjacent to each other transversely of the bar and are held in place by a second bar 32 therefor and secured to the first bar as by rivets 33. The blade unit is located in proper position on the head 12 by pins 34 projecting outwardly of the bottom face of the bar 30 and engaging within holes 35 in the head. Any convenient means may be provided for holding the blade unit in such position, such as pivoted latches 36 carried by the head and movable to the full line position indicated in Fig. 3.

As a convenient means for oscillating the blades with the head 12 located in its different positions of adjustment, I provide a sleeve 38 on the pintle 14. This sleeve is grooved annularly to provide a plurality of spaced collars 50 integral therewith and between each two of which projects a tooth 41 on the rear end of a blade. The sleeve may be reciprocated by a lever 42 pivoted on the body 10 at 44 and having its forward end engaging within a groove in the sleeve. The lever is preferably operated by an electric motor carried in the body member and driven by current passing through a guard 45.

It will now be apparent that oscillation of the lever 42 will function from the sleeve 38 to give the blade teeth 26 a shearing motion across the comb teeth whereby any hair passed thereinto will be sheared by the cutting edges formed by the bevels 28. In using the device for shaving, the head will be most conveniently adjusted to the full line position of Fig. 1. In this position the blades are exposed for surface engagement with the section to be shaved. It will be noted that the ends 26 of the blade teeth are somewhat short of the ends of the comb teeth 23 and that the comb teeth have lateral projections 46 on their ends adjacent to and shielding the ends of the comb teeth. The blades are of thin sheet metal and these projections are of a like thickness.

The blades 24 are normally flat and as illustrated in Fig. 7, the latches 36 hold the blade unit in such position that the ends 26 of the blades are held in resilient flat engagement against the cooperating surface of the comb teeth. As the exposed surface of the projections 46 and blades are passed over the section being shaved, the hairs pass into the spaces between the teeth and are cleanly sheared by the rapidly oscillating blades. It will be apparent that the closeness of the shave depends upon the thickness of the element between the skin and the shearing edges and upon how closely the skin can approximate such edges. In this respect, attention is called to the fact that in my improved device, not only is this element (the blades 24), very thin but furthermore the bevels at 28 permit the skin to be pressed very closely adjacent to such edges, thereby providing for a relatively close shave.

While my improved razor is constructed primarily for dry shaving, it can with equal facility be used with lather or the like if desired. This use is particularly facilitated by my novel blade unit construction and the removable mounting thereof on the head. When the shaving operation is completed or whenever it is desired to clean the razor, the latches 36 can be displaced and the blade unit freely removed from the head. Furthermore, should the cutting edges become dull or the blades be objectionable for any other reason a new blade unit can be substituted at no inconvenience and at little expense.

A further and important feature of my novel device is that it is equally adapted to shaving and clipping purposes. When it is desired to use the same for clipping, the head 12 is adjusted to the position shown in full lines in Fig. 2 and the beveled rear surface 22 is engaged with the surface to be clipped. In this case the hair being clipped passes through the relatively thick comb teeth (Fig. 7) and the hair stubble left is relatively long. It will be understood that other positions of adjustment of the head 12 may be desired by different users and that the several depressions 20 provide for these different positions of adjustment.

In Figs. 10 and 11 I have illustrated a somewhat modified form of the invention. In this case the comb teeth 50 project laterally of the comb plate and from thence rearwardly with the ends 51 of the teeth overhanging one face of the comb plate. The blade unit is constructed in like manner as that illustrated in Fig. 9 except that the blades are mounted in the holder with the bevels 28 facing the bar 30, reversely from that illustrated in Fig. 9. When the blade unit is mounted on the head (Fig. 10) the blades engage against a rib 52 which causes the blade ends 26 to be pressed resiliently into flat contact with the ends 51 of the comb teeth. In shaving with this form of the device the surfaces of the teeth 51 and blades will be placed against the skin and the closeness of the shave will depend substantially on the thickness of the teeth at 51. As illustrated in Figs. 7 and 10, the blade holding frame 30 is partially seated in a recess formed within and extending across one face of the comb plate rearwardly of the comb teeth whereby locating and holding the frame in proper position on the comb plate.

It will be understood that I have herein illustrated certain applications or forms of my invention and that these specific forms may be considerably modified within the scope of the claims appended hereto. For example, I might oscillate the blades by a rotary drive from the motor instead of a reciprocating or oscillating drive. Such a rotary drive is illustrated in Fig. 12 wherein a sleeve 54 is mounted against longitudinal movement on the pintle 14 and is rotated from the motor through a shaft 55, bevel gearing 56 and a spur gearing 57 on a shaft 58. The spur gearing is in mesh with the spur gearing teeth 59 on one of the collars 60. The collars 60 are shaped to provide face cam paths therebetween and the rear

ends 61 of the blades 62 are located in these paths and are rounded off to engage against the cam faces. The arrangement is such that rotation of the sleeve causes the blades to oscillate on their pivots, as will be clearly apparent.

Having thus described my invention what I claim as new and desire to secure by Letters Patent of the United States is:

1. A hair cutting instrument comprising a body member, a comb plate carried thereby and having comb teeth along one edge, blade means including a plurality of sheet metal blades in a metal holder and having teeth on their forward ends, releasable means carried by the comb plate and engaging the holder for removably supporting the blade means on the comb plate with the blade teeth positioned adjacent to the comb teeth, means providing pivots at the holder about which the blades can oscillate, and power driven means arranged to oscillate the blades about the pivots whereby moving the blade teeth transversely of the comb teeth, said blades and holder being removable from the comb plate as a unit.

2. A hair cutting instrument comprising a body member, a comb plate carried thereby and having comb teeth along one edge, blade means including a plurality of sheet metal blades arranged side by side in a common plane between two holder bars, the blades having teeth on their forward ends, releasable means cooperating with the bars for removably supporting the blade means on the comb plate with the blade teeth positioned adjacent to the comb teeth, means providing pivots about which the blades can oscillate relative to and between the bars, and means including a motor carried by the body member arranged to oscillate the blades about the pivots whereby moving the blade teeth transversely of the comb teeth, said blades and holder bars being removable from the comb plate as a unit.

3. A hair cutting instrument comprising a body member having two spaced lugs on one end thereof, a comb plate mounted for pivotal adjustment on and between the lugs and having comb teeth along its front edge, a plurality of blades mounted on the comb plate and having teeth cooperating with the comb teeth, means mounting the blades for pivotal movement on the comb plate, and means including a motor carried by the body member and intermediate driving means extending along the axis of pivotal adjustment of the comb plate arranged to oscillate the blades on the pivots and move the blade teeth transversely of the comb teeth.

4. A compound blade unit for use in hair cutting instruments, comprising a plurality of flexible sheet metal blades arranged side by side in a common plane, a holder having opposed faces supporting the blades therebetween in such arrangement as a unit, and means mounting the blades for individual pivotal movement on the holder, said unit being self-contained independently of said instruments and being adapted to be mounted thereon and cooperate with fixed comb teeth carried thereby.

5. A compound blade unit for use in hair cutting instruments, comprising a plurality of sheet metal blades arranged side by side in a common plane, two bars extending transversely of and supporting the blades in such arrangement therebetween, and pivot pins carried by one of the bars and supporting the blades for individual pivotal movement, said unit being self-contained independently of said instruments and being adapted to be mounted thereon and cooperate with fixed comb teeth carried thereby.

6. A hair cutting instrument comprising a body member, a comb plate carried thereby and having comb teeth along one edge, a plurality of sheet metal blades having cutting teeth on their forward ends, a frame supporting the blades for pivotal movement in a common plane, releasable means engaging the frame and removably supporting it together with the blades as a unit on the comb plate with the cutting teeth in cooperation with the comb teeth, and power driven means for oscillating the blades about the pivots whereby moving the blade teeth transversely of the comb teeth.

7. A hair cutting instrument defined in claim 6 in which the frame is seated immovably in and against the walls of a locating and holding recess extending across and within one face of the comb plate rearwardly of the comb teeth.

8. A hair cutting instrument comprising a body member, a comb plate carried thereby and having comb teeth along one edge, said teeth projecting laterally of the comb plate and from thence rearwardly with the rearwardly projecting ends of the teeth overhanging one face of the comb plate and forming fixed shearing teeth, resilient blade means mounted on the comb plate and having shearing teeth located beneath the fixed shearing teeth, means holding the blade means with its shearing teeth in resilient engagement with the fixed shearing teeth, and power driven means arranged to move the blade teeth back and forth in shearing relation to and transversely of the fixed shearing teeth.

9. The hair cutting instrument defined in claim 8 in which the blade means comprises a plurality of blades pivotally mounted in a frame releasably carried on the comb plate and wherein the power driven means is arranged to oscillate the blades on their pivots.

10. A hair cutting instrument comprising a body member, a comb plate having comb teeth along one edge, blade means mounted on the front face of the comb plate and having teeth cooperating with the comb teeth, means mounting the comb plate for pivotal adjustment on the body member for movement to two positions respectively wherein the blade means faces free space independently of the instrument for engagement with a surface for shaving and wherein the rear face of the comb plate faces free space independently of the instrument for engagement with a surface for clipping, said pivotal adjustment being about an axis located at and along the edge of the comb plate opposite to said one edge thereof, driving means extending along the axis of the pivotal adjustment of the comb plate and having engagement with the blade means, and means including a motor arranged to operate the driving means in a manner moving the blade teeth back and forth transversely of the comb teeth.

11. A hair cutting instrument comprising a body member, a cutting head having shearing teeth disposed along the forward end thereof and pivotally connected rearwardly of the teeth with the forward end of the body member to permit rotary adjustment of the head about the pivot axis to and from two positions in which the head is substantially in longitudinal alignment with the body member and disposed at an angle thereto respectively, movable shearing teeth cooperating with the first-named teeth, a pintle at and extending along the pivot axis, means including an element movably mounted on the pintle for giving

the movable shearing teeth shearing movement relative to the first-named teeth, and means for driving the element.

12. The instrument defined in claim 11 in which the said element is mounted for reciprocation along the pintle and in which the last-named means includes an arm pivoted intermediate its ends on the cutting head and providing a driving connection from the element to the movable shearing teeth.

13. A hair cutting instrument comprising a body member, a cutting head having shearing teeth and pivotally connected rearwardly of the teeth with the forward end of the body member to permit rotary adjustment of the head about the pivot axis to a plurality of positions relatively angular to the body member, means for supporting the head in its adjusted positions, movable shearing teeth cooperating with the first-named teeth, a pintle at and extending along the pivot axis, an element mounted for reciprocation on and along the pintle and grooved annularly, and means extending into the grooving thereof from the body member for reciprocating the element and from the head for transmitting the reciprocation to the movable shearing teeth.

ANGUS A. MARTIN.