R. T. RANDALL.

RERAILER.

APPLICATION FILED JAN. 25, 1918.

1,262,560.

Patented Apr. 9, 1918.

2 SHEETS—SHEET 2.

Fig. 2.

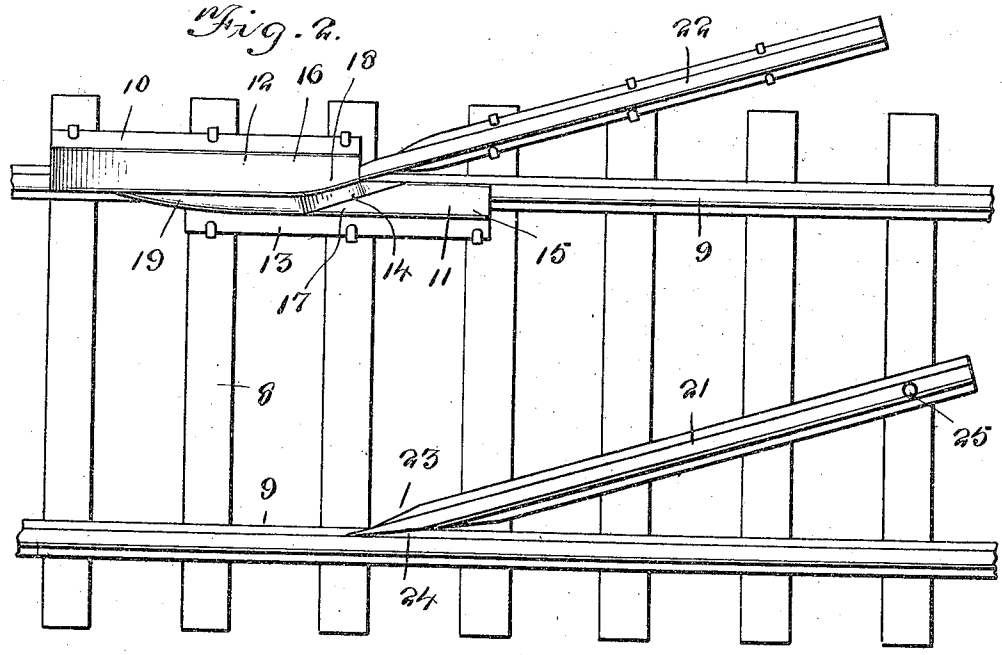

Fig. 4.

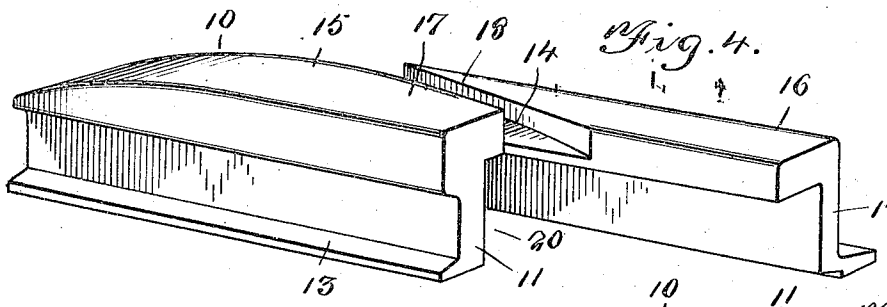

Fig. 6.

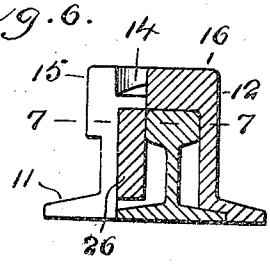

Fig. 7.

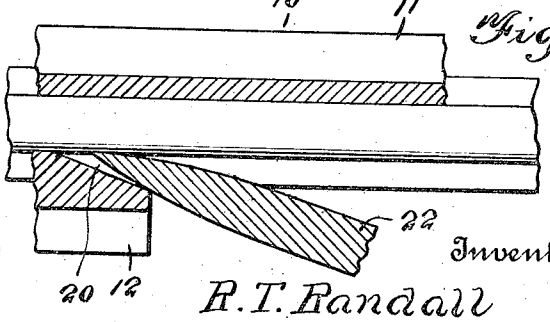

Witness
E. R. Ruppert.

Inventor
R. T. Randall

By Victor J. Evans

Attorney

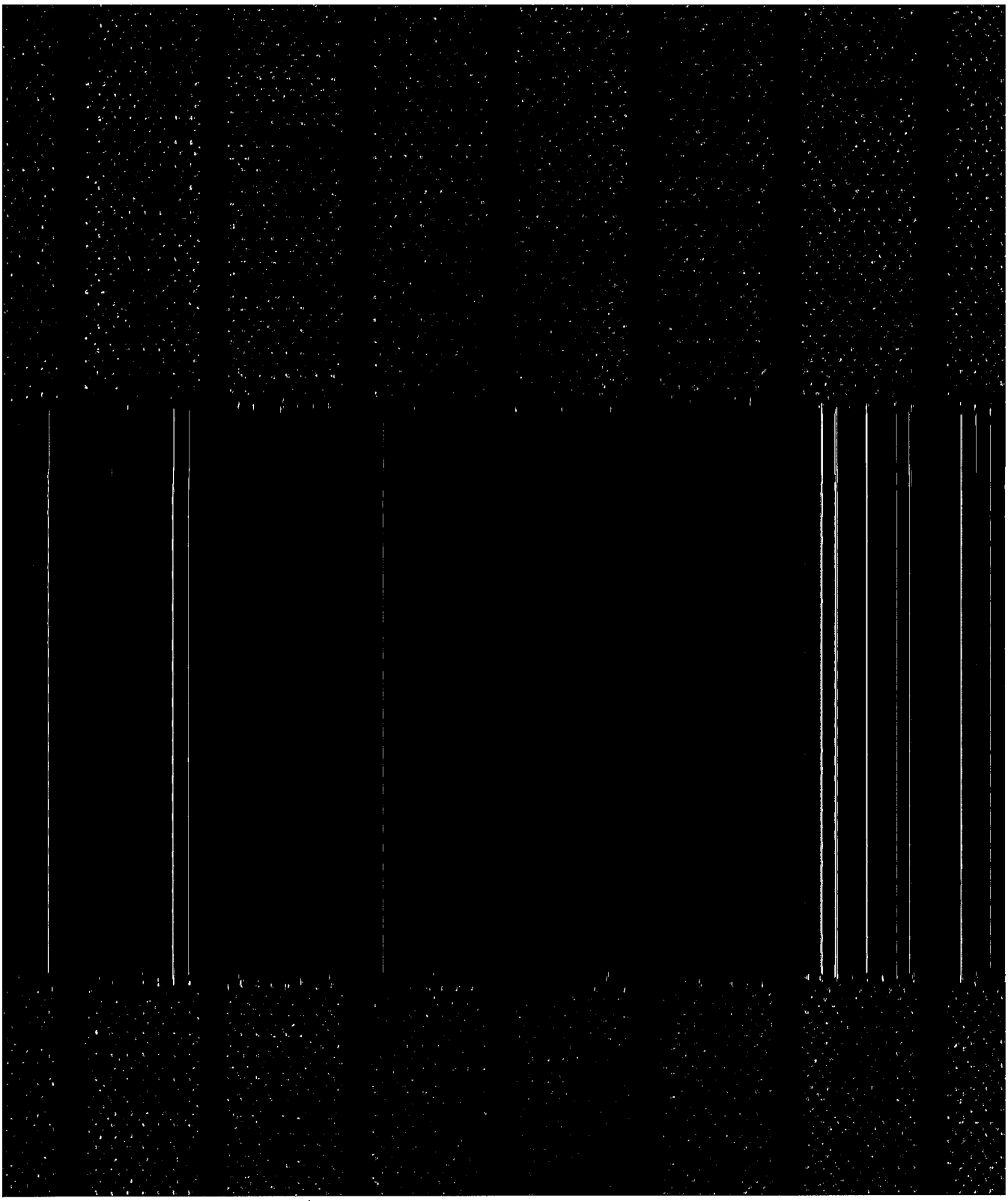

UNITED STATES PATENT OFFICE.

FRED H. REAM, OF KANSAS CITY, MISSOURI.

UNIVERSAL JOINT.

1,262,561. Specification of Letters Patent. Patented Apr. 9, 1918.

Application filed April 12, 1916. Serial No. 90,758.

To all whom it may concern:

to its closed end. Studs 3, are fixed in the

tion when taken in connection with the drawings, that the simplicity and advantages as well as the operation of the device will be perfectly apparent to those skilled in the art to which such inventions appertain, the derailed car wheels being arranged to travel over the re-railing car rails 21 and 22 so that the flanges of one of the wheels may be directed by the rerailing rail 21 against the inner face of the head of one of the track rails 9, and the bearing surface of the said wheel positioned upon the said track. In a like manner, the flanges of the opposite wheels will be directed by the re-railing rail 22 causing the flanges of the said wheels to pass between the inclined confronting ends of the heads 15 and 16 of the block 10, over the web 14 and following the contour from the inner end and inner face of the head 16 of said wheels will travel over the extension 19 and over the rounded tread surface of the head 16 on to the second track rail 9.

Having thus described the invention, what I claim is:

1. In a rerailing device for railroad rolling stock, a block, said block comprising spaced sides each provided with a head, and designed to be arranged over one of the track rails, one of said heads having a straight bearing surface, the other head having its bearing surface rounded from its inner to its outer end and its said inner end terminating inwardly of the outer end of the first mentioned head, both of the heads having their confronting faces arranged at a similar angle, a web connecting the angular ends of the heads below the tread surface of the heads, a latch on the side of one of the heads forming a continuation of the web, and rerailing rails each having its inner end arranged at an angle whereby one of the said rails may be positioned against one of the track rails, and the other rerailing rail may be positioned between the sides of the block at the inner end of one of the said sides.

2. In a car replacer, a rerailing block comprising a member including a member channeled longitudinally from the under face thereof to provide two spaced sides and a head for each of the sides, and the channeled portion of the block designed to be received over a rail, each of the heads terminating approximately equi-distant from the center of the block and having their confronting sides inclined in the same direction, a horizontally straight web connecting the heads at the said inclined portions thereof, one of the sides having its inner end beveled to provide a pocket between the same and the side of the rail, and rerailing rails, one of which being pivotally connected to one of the ties and the other having a reduced end received in the referred to pocket.

3. In a car replacing device, a block which is channeled longitudinally from its under face to provide two spaced sides, the inner corners of which are depressed longitudinally and the outer corners of which are flanged outwardly whereby the block may be arranged over a rail to rest on the base flanges thereof and on the ties supporting the rail, each of the sides being formed with an inwardly flanged head, one of the heads presenting a straight surface and the other head being rounded from its inner to its outer end, each of the heads terminating approximately equi-distant from the center of the block, said heads, at the confronting portions thereof being inclined in the same direction, a horizontally straight web connecting the said heads at the beveled portions thereof, a flange providing an extension for the said web on the inner face of the rounded head, the side having the rounded head having its inner edge beveled providing a pocket between the said side and one of the sides of the rail, rerailing rails each comprising a member inclined from its inner to its outer end and its inner end beveled in opposite directions whereby to contact with the sides of the rails and be arranged at an angle with respect to the said main rails, one of said rerailing blocks having its inner end reduced whereby to be received in the referred to pocket, and a pivot member securing the other rail to one of the ties.

In testimony whereof I affix my signature.

RITCHARD T. RANDALL.

Copies of this patent may be obtained for five cents each, by addressing the "Commissioner of Patents, Washington, D. C."