Oct. 1, 1963 S. HAMMER 3,105,417

METHOD FOR PRODUCTION OF REINFORCED BAGS, TOBACCO POUCHES, ETC., OF SYNTHETIC FOIL

Filed Nov. 18, 1960

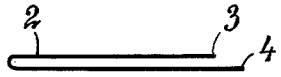

Fig. 2.

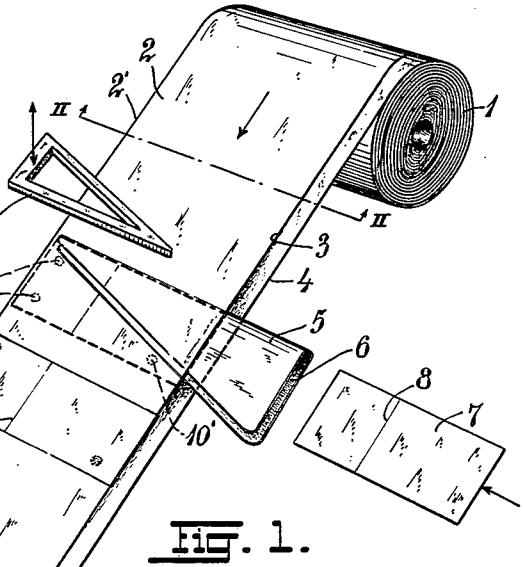

Fig. 1.

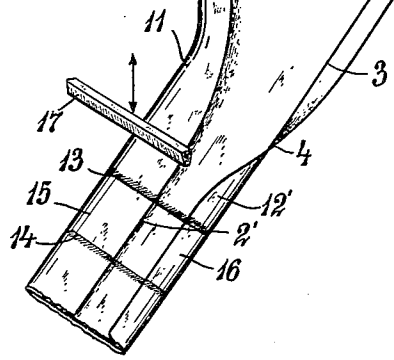

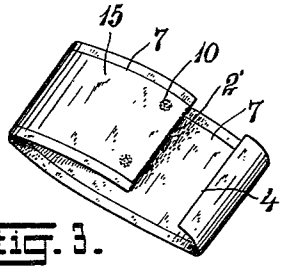

Fig. 3.

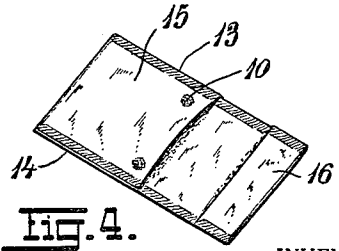

Fig. 4.

INVENTOR.
Steffen Hammer

BY

Watson, Cole, Grindle & Watson
Attys.

United States Patent Office

3,105,417
Patented Oct. 1, 1963

3,105,417

METHOD FOR PRODUCTION OF REINFORCED BAGS, TOBACCO POUCHES, ETC., OF SYNTHETIC FOIL

Steffen Hammer, P.O. Box 6598, Oslo, Norway

Filed Nov. 18, 1960, Ser. No. 70,340
Claims priority, application Norway Nov. 21, 1959
1 Claim. (Cl. 93—35)

The invention relates to a method for producing reinforced bags, tobacco pouches or similar objects of the type produced from synthetic foil stiffened by an inserted sheet of paper, carton etc.

Such packings has of recent years been extensively used i.a. for packing of tobacco, the packing being in the form of a tobacco pouch.

The invention has for its object to provide a method by which the production of such tobacco pouches etc. can be made at desired speed and with substantial lower percent of waste as compared with earlier known methods.

According to the invention this object is obtained by suitable means for fixing the sheets which are used for stiffening of the synthetic foils from which the tobacco pouch etc. is made, thereby preventing displacement during the subsequent steps of the production. Such displacement results in that the welding seams along the edges of the finished product were unequal and often so deficient that they did not give a sufficiently strong interconnection.

The fixing of the inserted sheets in relation to the foil web can be made according to the invention by different means. According to a preferred method the fixing is accomplished by spot welding. The fixing, however, also may be carried out by pressure-sensitive stitching-together or other convenient securing means.

For better understanding of the invention the same will be further described below with reference to the drawing, where the method steps according to the invention are diagrammatically shown.

In the drawing:

FIG. 1 is a perspective view of a double folded foil web formed into a tobacco pouch stiffened by an inserted paper-sheet,

FIG. 2 is a section along the line II—II in FIG. 1,

FIG. 3 is a perspective view showing a tobacco pouch blank just before the welding thereof, and

FIG. 4 is a perspective view showing the finished tobacco pouch.

The numeral 1 shows a supply, for example plastic foil, rolled up as a roll of a continuous web which is folded together as clearly seen from FIG. 2. The one web half is thus folded down on the other, but in such a way that the edge 3 of the wab 2 protrudes somewhat shorter as compared with the edge 4.

The web 2 is led forward past an inserting member 5, consisting of a thin bent metal plate, the bent edge of which faces against the supply of the web. The inserting member is arranged between the two web portions, and stiffening sheet 7 of paper, etc., is led into the opening 6 in the member 5 and is pushed in place between the web portions. The sheet 7 is preferably provided with a folding line 8, the object of which will be further explained in the following.

After the sheet 7 has been inserted in place between the web halves, as shown by dotted lines in FIG. 1 a welding electrode 9 is brought down against the webs and the sheet, and produces for instance three spot welding areas 10'. The sheet and the web halves thereby are mutually exactly fixed in relation to each other during the subsequent folding and welding operation.

At 7' in the drawing is shown a stiffening sheet secured between the two web halves by means of the welding

spots 10. The one short side of the sheet then rests firmly against the folded edge 2', while the other short side substantially registers with the edge 3 of the shorter web half.

The further stages in the production of the tobacco pouch consists folding the web with the inserted sheets, said folding being carried out along the folding line 8' of the sheets. Such a folding line on the sheets is not necessary, but will assist to obtain an exact folding, and to obtain the fold exactly on the desired location.

Simultaneously with said folding, indicated at 11 on FIG. 1, the wider edge 4 is folded over the shorter edge 3, as shown at 12 in the drawing. When both of these folds are made, the web will look approximately as shown in the perspective view of FIG. 3, illustrating a cut off piece of the web with inserted stiffening sheet. In this folded form the web is subjected to the action of a transverse welding electrode 17. By forward feeding of the web and intermittently bringing down the electrode 17, by exact adjustment the welding electrode, transverse welding seams will be provided immediately along the longer edges of the stiffening sheet 7. By means of a following cutting mechanism (not shown) the blanks are severed to form finished tobacco pouches as shown in FIG. 4.

As mentioned the drawing is only schematic and the various elements assisting in the folding of the edges of the web and actuating the welding electrodes etc. in synchronized sequence are not shown. Such elements either do not form essential parts of the invention since they are known per se.

A finished tobacco pouch according to FIG. 4 will be exact in its form due to the fact that already from the start of the productioin the inserted sheet is fixed in place, so that the welding seams 13 and 14 will extend with the same width along the edges of the inserted stiffening sheet 7. If it should have been possible for the sheet 7 to become displaced, one of these marginal edges could easily have been narrower, than the other, so that the tobacco pouch takes on unfavourable appearance or one of the welding seams even could produce a deficient seam that it would have a tendency to burst.

The method described sets forth further advantages. Thus only one single transverse welding electrode is necessary, one of the short sides of the finished pouch obtained by the folding edge 2' and the other side being produced by folding of the protruding edge 4. By the finishing welding operation this edge is secured down to the flap part of the tobacco pouch, as clearly seen from FIG. 4. Thereby said edge is held firmly in place without the necessity of any welding seam along the same and at the same time there is, however, produced a small pocket 16, which with advantage may be used for keeping cigarette paper.

In the example shown the web for the production of the bags is formed as a double folded continuous foil web, fed from a supply roll 1. It is, however, possible to arrange the apparatus for such production so that the bags are produced from a single plastic foil web by which suitable folding elements are imparted the shape shown in FIG. 2.

I claim:

A method for the production of flat, double-walled, reinforced tobacco pouches or the like with a closing flap, comprising the steps of continuously feeding a double-folded web of thermo-plastic artificial foil with an open side, inserting stiffening sheets of paper or carton material between the two folds of thermo-plastic artificial material through the open side in spaced relationship relative to each other with the sheet inserted in contact with a folded edge of the web and in correct position in relation to the web parts between which the sheets are

inserted, spot welding each stiffening sheet to the folded web, welding the edges of the plastic material together along the edges which are outside the contours of each stiffening sheet in the space between adjacent sheets, and finally folding the plastic material and severing from the web to form the finished bag.

References Cited in the file of this patent

UNITED STATES PATENTS

1,990,637	Daller	Feb. 12, 1935
2,260,064	Stokes	Oct. 21, 1941
2,294,220	Albertson	Aug. 25, 1942
2,301,771	Billeb	Nov. 10, 1942
2,668,769	Schlienz	Feb. 9, 1954
2,820,497	Rusch	Jan. 21, 1958
2,854,186	Williams	Sept. 30, 1958
2,896,516	Tilton	July 28, 1959
2,957,394	Williams	Oct. 25, 1960

FOREIGN PATENTS

829,215	Great Britain	Mar. 2, 1960