Aug. 4, 1959 C. O. SCHMIDT, JR 2,897,537

HIDE PULLER

Filed June 8, 1956 6 Sheets-Sheet 1

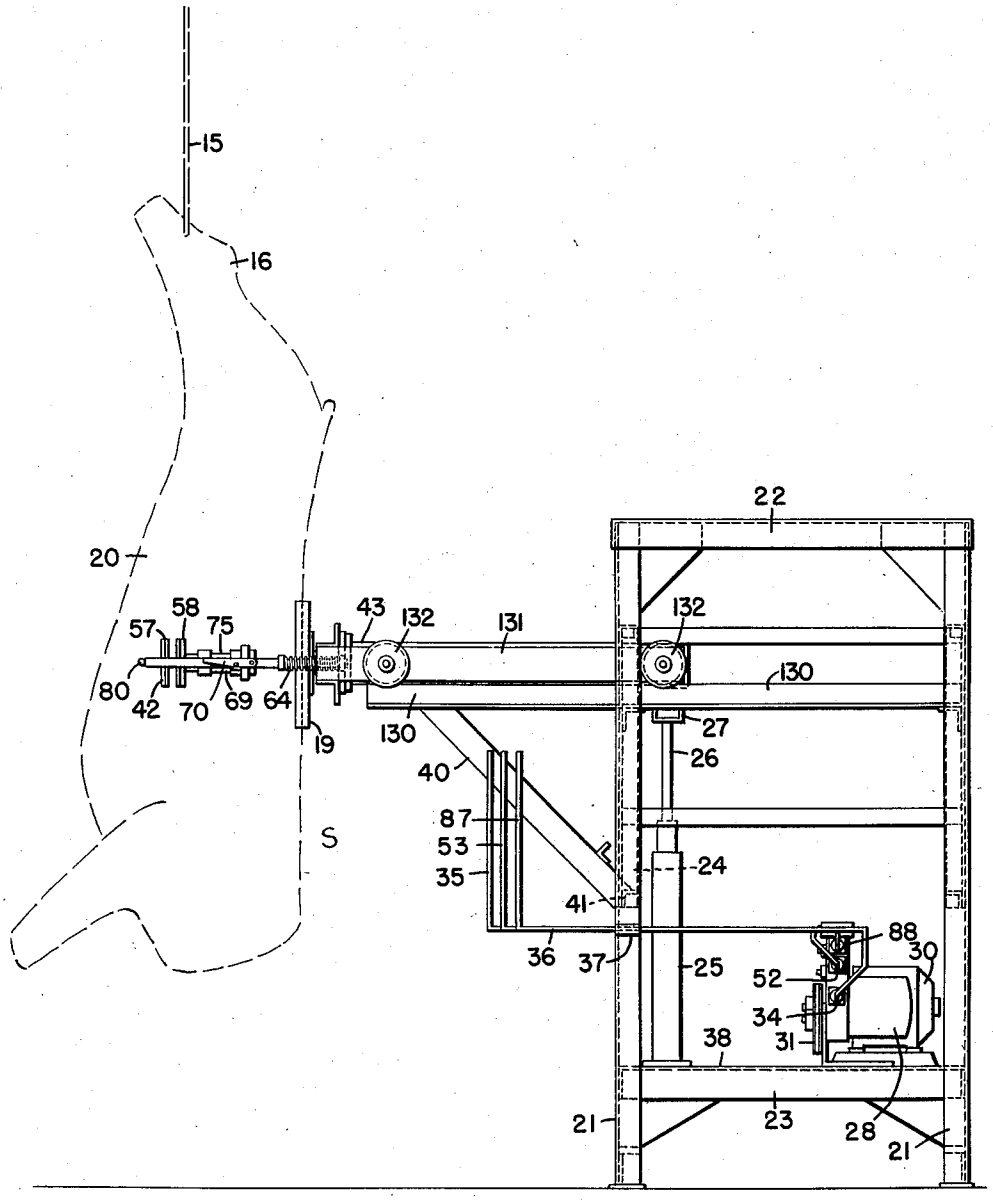

Fig. 1

INVENTOR.
CARL OSCAR SCHMIDT, JR.
BY
J. Warren Kinney, Jr.
ATTORNEY

Aug. 4, 1959 C. O. SCHMIDT, JR 2,897,537

HIDE PULLER

Filed June 8, 1956 6 Sheets-Sheet 2

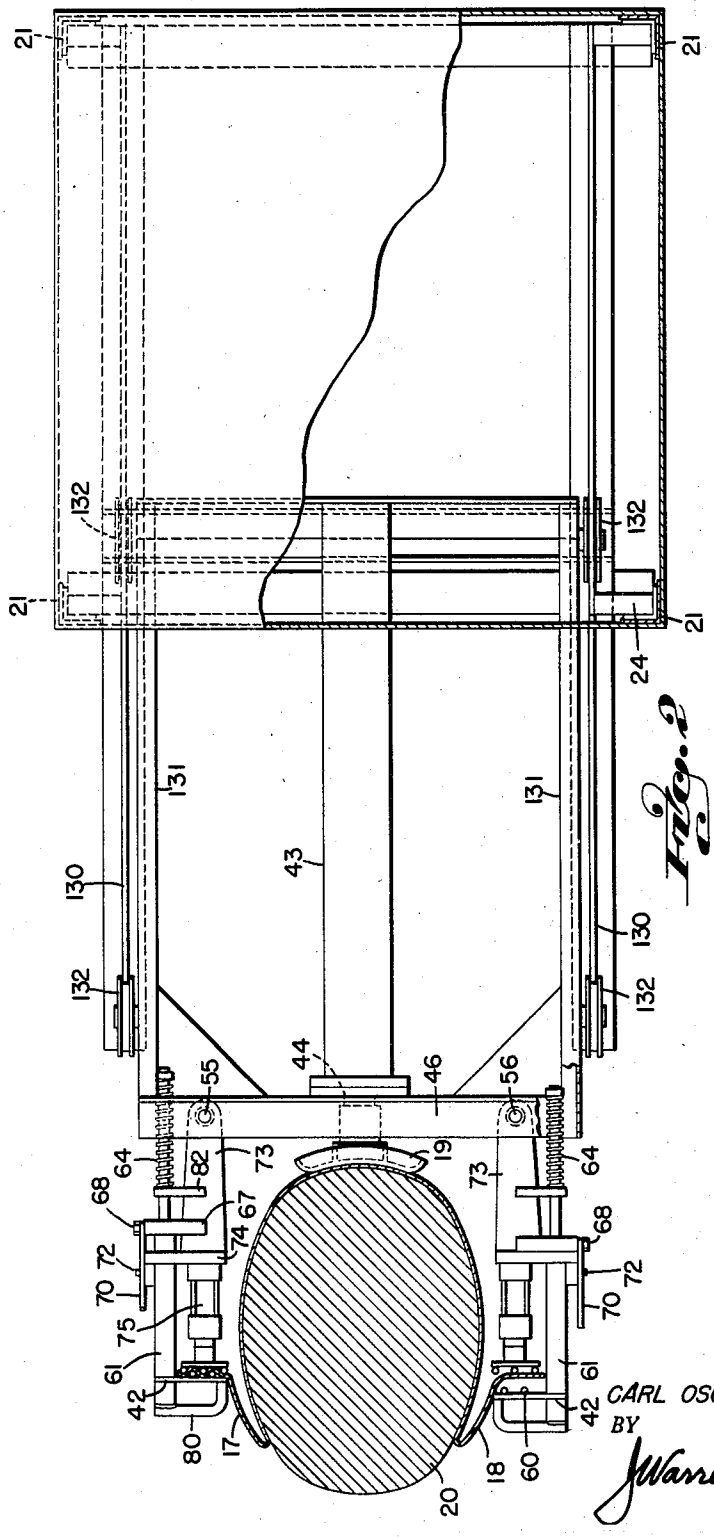

Fig. 2

INVENTOR.
CARL OSCAR SCHMIDT, JR.
BY
J. Warren Kinney, Jr.
ATTORNEY

Aug. 4, 1959 C. O. SCHMIDT, JR 2,897,537

HIDE PULLER

Filed June 8, 1956 6 Sheets-Sheet 3

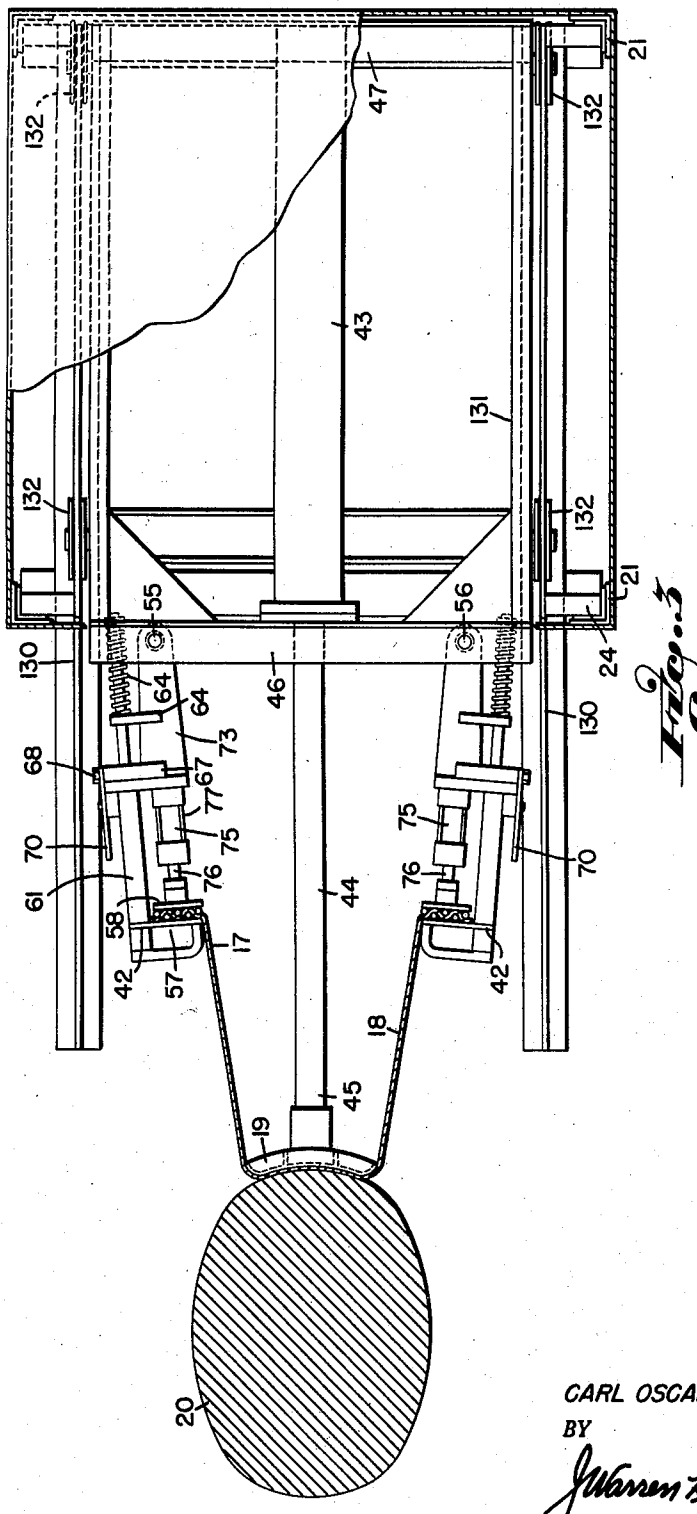

Fig. 3

INVENTOR.
CARL OSCAR SCHMIDT, JR.
BY
J. Warren Kinney, Jr.
ATTORNEY

Aug. 4, 1959 C. O. SCHMIDT, JR 2,897,537

HIDE PULLER

Filed June 8, 1956 6 Sheets-Sheet 4

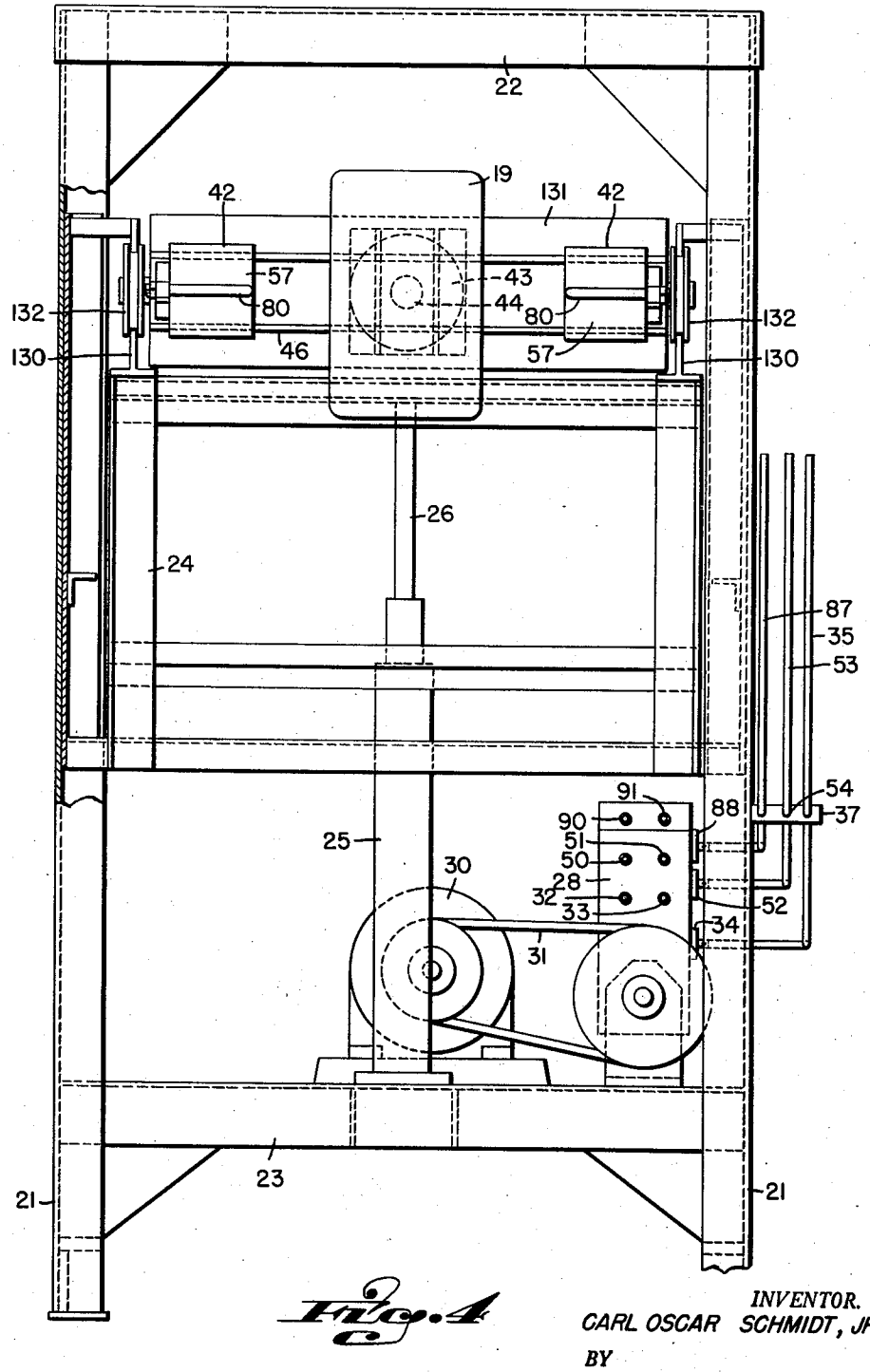

Fig. 4

INVENTOR.
CARL OSCAR SCHMIDT, JR.

BY

J. Warren Kinney, Jr.
ATTORNEY

Aug. 4, 1959 C. O. SCHMIDT, JR 2,897,537

HIDE PULLER

Filed June 8, 1956 6 Sheets-Sheet 5

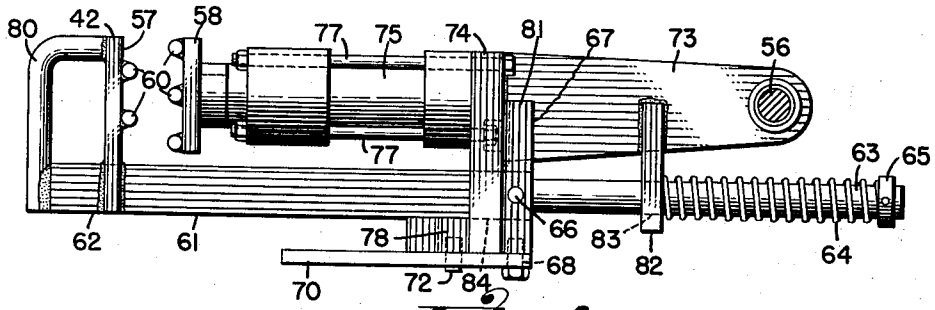

Fig. 5

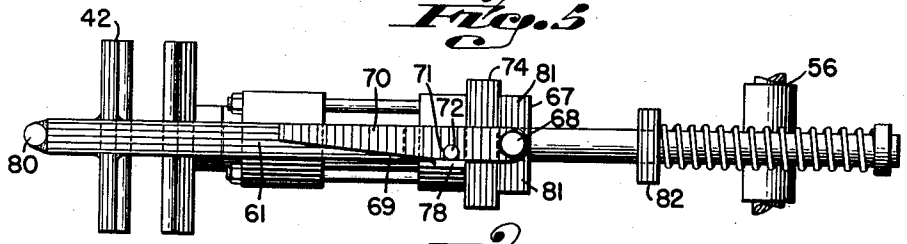

Fig. 6

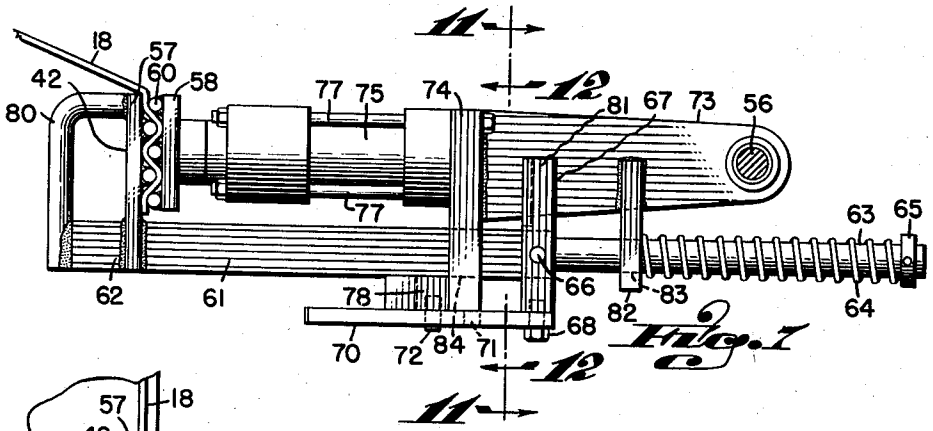

Fig. 7

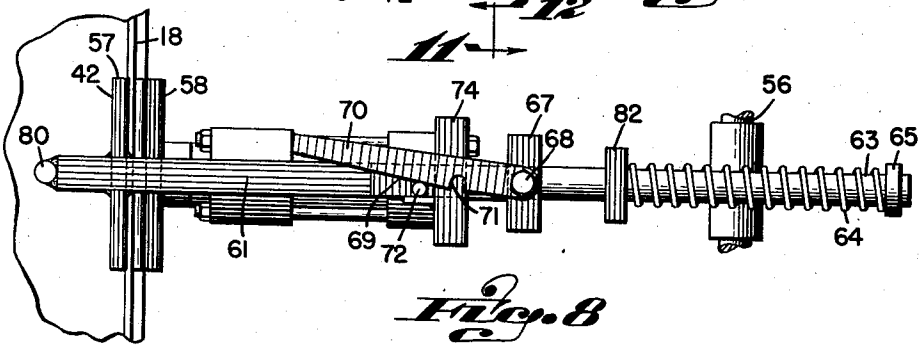

Fig. 8

INVENTOR.
CARL OSCAR SCHMIDT, JR.
BY
J. Warren Kinney Jr.
ATTORNEY

Aug. 4, 1959 C. O. SCHMIDT, JR 2,897,537

HIDE PULLER

Filed June 8, 1956 6 Sheets-Sheet 6

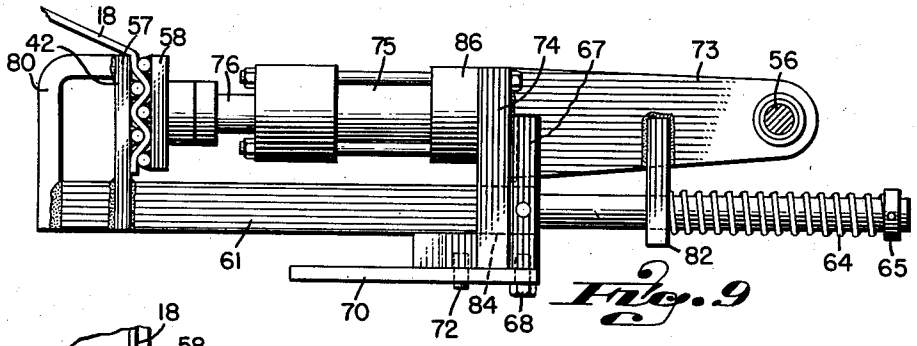

Fig. 9

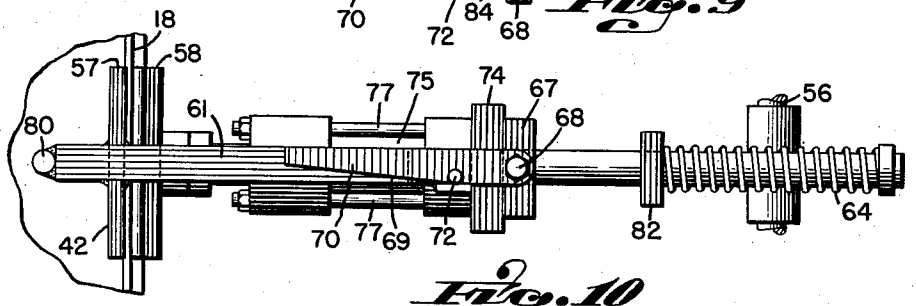

Fig. 10

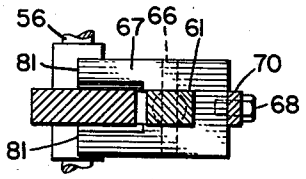

Fig. 11

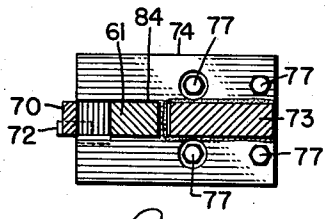

Fig. 12

INVENTOR.
CARL OSCAR SCHMIDT, JR.
BY
J. Warren Kinney Jr.
ATTORNEY

United States Patent Office

2,897,537

Patented Aug. 4, 1959

2,897,537

HIDE PULLER

Carl Oscar Schmidt, Jr., Wyoming, Ohio, assignor to The Cincinnati Butchers' Supply Company, Cincinnati, Ohio, a corporation of Ohio

Application June 8, 1956, Serial No. 590,166

9 Claims. (Cl. 17—21)

This invention relates to a hide stripping apparatus, such as may be employed in modern meat packing plants. In the stripping of hides from meat animals, care is exercised to ensure the production of hides in perfect condition, that is, without rips, marks, or defacements which would depreciate the value of the hides in the manufacture of leather and the like.

An object of the invention is to provide improved apparatus for the stripping of hides, operating with speed and effectiveness to produce saleable hides in the best possible condition, without the employment of highly skilled labor.

Another object is to provide a hide stripping apparatus of improved design, which is comparatively simple and inexpensive to manufacture, yet highly effective and reliable in its function of producing uninjured high quality hides at a production rate of operation.

A further object of the invention is to provide an apparatus of the character stated, which is designed for operation with great facility and effectiveness and with due regard for the safety and well-being of the operator.

These and other objects are attained by the means described herein and illustrated upon the accompanying drawings, in which:

Fig. 1 is a side elevational view of the apparatus of the present invention, shown in extended position for bracing a carcass preparatory to stripping of the hide therefrom.

Fig. 2 is an enlarged top plan view of the Fig. 1 disclosure, partly broken away and in cross-section showing the hide grippers in two different stages of operation.

Fig. 3 is a view similar to Fig. 2, on the same scale, showing the condition of the apparatus upon completion of the stripping operation as performed by the apparatus.

Fig. 4 is a front elevational view of the apparatus slightly enlarged over Fig. 3, and partly broken away.

Figs. 5 and 6 are further enlarged top and side elevational views, respectively, of a hide gripper shown in open-jaw position, parts being shown in cross-section.

Figs. 7 and 8 are top and side elevational views, respectively, similar to Figs. 5 and 6, and on the same scale, showing the hide gripper in a preliminary gripping condition.

Figs. 9 and 10 are top and side elevational views, respectively, similar to Figs. 5 and 6, and on the same scale, showing the hide gripper in a final gripping condition.

Fig. 11 is a cross-sectional view taken on line 11—11 of Fig. 7.

Fig. 12 is a cross-sectional view taken on line 12—12 of Fig. 7.

In the modern meat packing plant, it is customary to hang the carcasses from an overhead moving conveyor, and thereby bring the carcasses one by one to various stations or locations at which different degrees of finishing are performed until finally the meat and the by-products are processed to commercial form. While suspended from the overhead conveyor, the carcasses are spaced apart a distance sufficient to allow for certain manipulations individually, as may be necessary in carrying the process to completion. One of the manipulations is that of stripping the hide from the carcass, and this operation concerns the present invention.

Fig. 1 shows a carcass 20 suspended, as above explained, by means of a chain or other hanger 15 applied to a hind leg 16 in customary manner. The hanger is one of many depending in spaced relation from any ordinary moving conveyor of the overhead type, designed to advance the carcasses past various stations at which some phase of finishing work is performed upon each carcass. At the stripping station, S, or perhaps in advance thereof, the carcass is to be prepared for machine stripping, by a workman who manually loosens the hide from all the legs, slits the hide along the belly from end to end, and preliminarily severs the side from the animal at opposite sides of the slit to provide the flaps 17 and 18 shown upon Fig. 2. The carcass is thusly prepared for introduction to the hide stripping apparatus. The stripping operation involves, briefly, grasping the hide flaps 17 and 18 and pulling them toward and beyond the backbone, while the backbone is supported against a back rest 19 as in Fig. 3. That much of the hide which remains attached to the carcass, beneath the back rest, is to be detached manually after the carcass is released from the hide stripping apparatus.

The foregoing explanation reveals generally the stripping process and the function of the stripping apparatus. Follows now a detailed description of the apparatus as disclosed in the accompanying drawings.

The apparatus or machine comprises a main upright frame which conveniently may be constructed of four vertical angle iron members 21 braced with upper horizontal members 22 and lower horizontal members 23. The vertical members may furnish guide means for a sub-frame 24 which is shiftable vertically within the confines of the main frame, to various elevations as may be determined by the operator. Movements of the sub-frame may be under the control of a hydraulic cylinder 25 of the double-acting type, the piston rod 26 of which may be securely attached to a fixed brace 27 of the sub-frame. From the foregoing, it will be understood that fluid under pressure introduced to one end or the other of the hydraulic cylinder 25 by conventional means not shown will result in elevating or lowering movements of the sub-frame 24 to any extent determinable by the operator of the machine.

Pressure of fluid, which may be a liquid such as oil, may be generated in a pump unit of any approved type indicated generally by the reference character 28, and powered by an electric motor 30 which drives the unit through a pulley and belt arrangement 31, or otherwise. In Fig. 4, the characters 32 and 33 indicate pipes or tubes which are to have connection with the upper and lower ends of cylinder 25, as will be understood, for delivering and exhausting fluid at opposite ends of the cylinder to actuate the piston rod 26. Movement of fluid in opposite directions through the pipes or tubes 32 and 33 may be governed by a slide valve 34. The valve may be reciprocated axially within unit 28 by manipulating a lever 35, the shaft 36 of which is rotatably supported in a journal block 37 carried by the main frame of the machine, so that by rocking the control lever 35 to the right or left in Fig. 4, the slide valve may be selectively positioned to deliver fluid under pressure to either of the pipes or tubes 32 or 33. At an intermediate position of the control lever, shown in Fig. 4, the valve would be neutralized so as to preclude movement of fluid to or from the cylinder 25, thereby maintaining a given elevation of the sub-frame 24.

With respect to the fluid pressure unit, its control valves and levers, and the manner of powering same, the understanding is that no novelty is claimed therein per se, wherefore it is expected that any desired workable modifications or substitutions may be resorted to in this connection. It is desirable, of course, to locate any control levers such as **35** within easy reach of the operator at the front of the machine. The elements mentioned may be supported upon a platform **38** of the main frame, which supports also the cylinder **25**.

Incorporated in the structure of the sub-frame **24** is a pair of spaced parallel rails or tracks **130—130** upon which may ride a shiftable carriage **131**, the carriage being provided with flanged wheels **132**. The carriage rails extend forwardly of the main frame, to permit shifting of the carriage from a retracted position inside the frame, to the extended position of Fig. 1 wherein the carriage is laterally projected relative to the frame. These two positions are shown also upon Figs. 3 and 2, respectively. To reinforce the rails, Fig. 1 shows inclined bracing means **40** having opposite ends fixed to the outer extremities of the rails, and to the sub-frame at the location **41**. As will be apparent, the rails move bodily with the sub-frame and the bracing means, in the vertical direction, so that the elevation of the rails and carriage **131** with respect to floor level, may be varied by operation of the hydraulic means **25—26**. By this means, it is possible to easily adjust the back rest **19** and hide gripper **42** to properly engage any carcass regardless of size or length, or its distance above floor level, while hanging from the overhead conveyor.

The carriage **131** includes means for projection and retraction of the back rest **19** relative to the carriage, in directions parallel to the rails **130**. Such means may comprise a hydraulic cylinder **43** of the double-acting type, having a piston rod **44** which supports the back rest **19** at its free or forward end **45**. The body of the cylinder is substantially horizontal, and may be fixedly secured in any suitable manner to the forward and rear cross-beams **46** and **47** of the carriage. Thus, the cylinder is shiftable always with the carriage, whereas the piston rod may be extended or retracted relative thereto. It may here be noted that the carriage is free-floating upon the rails **130**, the piston rod **44** being capable of reciprocation relative to its cylinder without necessarily moving the carriage.

Pressure of fluid available at the motor-driven unit **28** is to be piped by means of flexible tubing (not shown) to the opposite ends of cylinder **43**, for actuating the piston rod **44**. For the purpose of maintaining clarity in the drawings, the various flexible tubes have been omitted from the drawings, since by mere explanation the needed connections can be clearly and unequivocally understood. For example, by referring to Fig. 4, it can readily be appreciated that fluid lines **50** and **51** at the pressure unit would connect to opposite ends of the double-acting cylinder **43**, for supplying and exhausting fluid under pressure to move the piston rod selectively in forward or reverse direction, at the will of the operator. Fluid flow through the lines **50** and **51** may be controlled by a slide valve **52**, to be reciprocated transversely of the unit **28** by rocking the control lever **53** about its bearing pivot **54**. Thus, swinging the lever **53** to the right, in Fig. 4, may shift the valve to cause movement of the piston rod **44** in one direction, whereas swinging the lever to the left may cause movement of the piston rod in the opposite direction. The intermediate position of the lever, shown in Fig. 4, may enforce closing of the valve to preclude flow of fluid through both lines 50 and 51, to maintain a static position of the piston rod when necessary.

From the foregoing, it will be understood that the carriage **31** in Fig. 2 may be advanced manually along the rails toward the carcass **20** until the back rest **19** abuts the backbone; then the grippers may be applied to the hide flaps **17** and **18** to firmly grip the flaps. With the elements thusly related, the operator will manipulate the control lever **53**, causing the piston rod **44** to project from cylinder **43** and tending to push the carcass away from the machine; however, since the carcass cannot be so moved because of its weight and the resistance imposed by the holding effect of grippers **42**, projection of the piston rod **44** will necessarily be translated into a backing-up or retracting movement of carriage **131**, until as shown in Fig. 3, the carriage has been quite fully retracted. Since the grippers **42** are attached to the carriage, they will retract also, to strip the hide from the carcass to the extent indicated upon Fig. 3. Subsequent retraction of piston rod **44**, and release of the hide from the grippers, will permit the carcass to be carried away from the machine by the overhead conveyor, to a subsequent station at which the hide will be finally and completely severed from the backbone area of the carcass as a separate operation.

When a succeeding carcass is conveyed to the machine, the carriage with its back rest **19** retracted is again manually advanced until the back rest strikes the carcass at the backbone area, whereupon the grippers are attached to the hide flaps and the piston rod extends outwardly from the cylinder, as before explained, to repeat the stripping operation.

Attention is now directed to the grippers **42**, of which two are shown mounted upon the forward beam of the carriage by means of pivotal connections **55** and **56**, which permit free swinging movement of the grippers bodily in a horizontal plane. As the grippers are identical, an explanation of one will suffice for the other also. With reference to Fig. 5, the gripper is seen to comprise a primary jaw **57** and a secondary jaw **58**, which may be brought together as in Figs. 7 and 9 for grasping and holding a hide **18**. The jaws may be provided with transverse co-operative bars **60** arranged in staggered relationship to best hold the hide by folding it, as in Fig. 7, rather than by penetrating or piercing it and thereby reducing the value of the hide.

The primary jaw **57** is securely fixed, as by welding, to one end **62** of a slide bar **61**. At the opposite end **63** the slide bar carries an encircling compression spring **64**, the outermost end of which spring abuts a collar **65** or equivalent stop member fixed to the extremity of bar end **63**. At a point intermediate the ends of slide bar **61**, there is fixed by means of a pin **66** or equivalent fastener, a transverse bifurcated guide block **67** which carries a pivot member **68** rockingly supporting a latch member or lever **70**. At a location removed from the pivotal mounting **68**, the latch member has formed therein a transverse notch **71** adapted to engage and disengage a latch pin **72**, as will presently be explained.

The body element of the gripper may comprise a mounting bracket **73** having at one end the pivot means **56**, and at its opposite end a relatively heavy transverse plate **74** welded or otherwise joined at right angles to the bracket member **73**. This plate furnishes a base or mount for a single-acting hydraulic cylinder **75** the piston rod **76** of which carries the secondary grip jaw **58**. The cylinder may be secured to plate **74** in any suitable manner, as by means of bolts **77** passing through the plate and the heads of the cylinder. The plate **74** may be furnished with an extending boss **78**, from which projects the fixed latch pin or part **72** to be engaged by lever **70**. The cylinder **75**, slide bar **61**, bracket member **73** and latch lever **70** are all arranged in substantial parallelism in the gripper assembly. The jaws **57** and **58** are disposed transversely to the slide bar and cylinder **75**, and are parallel to one another. A loop bar **80** welded or otherwise fixed to the slide bar and to the jaw **57** reinforces the jaw and provides a handle to be grasped in manipulating the gripper.

The slide bar **61** is mounted for limited reciprocation, without rotation, relative to mounting plate **74**, and

means to preclude rotation of the bar relative to the plate, is hereinafter described. Accordingly, the upstanding arms 81—81 of the bifurcated guide block 67 are adapted to embrace loosely, and slidingly, the opposite faces of bracket 73 to enable shifting of block 67 from the Fig. 5 position to the Fig. 7 position, as the slide bar reciprocates relative to plate 74. In its axial movement, the slide bar 61 may be supported by an apertured bearing lug 82 welded or otherwise fixed to bracket 73, the aperture 83 thereof being slidingly receptive of the round section of the slide bar. As will be understood, the compression spring 64 acts constantly against collar 65 and lug 82, to urge the slide bar to the right, or to position for closing the jaws 57 and 58.

A second bearing or channel 84, provided in plate 74, slidably supports the bar 61 at a distance from bearing lug 82. As indicated upon Fig. 12, the bearing 84 may be rectangular in form to accommodate the angular shape of the slide bar forwardly of block 67. The opposite ends of slide bar 61 are made round and rectangular in cross-section only by preference, and not of necessity, and it will readily be understood that the structure would be operative irrespective of the cross-sectional shape of the bar. It is necessary only that the slide bar be supported for reciprocation, without rotation, relative to the bracket member 73.

Referring now particularly to Figs. 5 and 6, it may be noted that the jaws are open, and slide bar 61 is advanced in the direction of handle brace 80 with the spring 64 under compression. The parts are to be so held in a cocked relationship, by the latch lever 70 in the manner best indicated upon Fig. 6. As long as the latch lever notch 71 is engaged with pin 72, the jaws will be held open as shown, with spring 64 under compression.

If it be desired to apply the gripper to a hide 18, as in Figs. 7 and 8, the operator need only insert a margin of the hide between the jaws 57 and 58, and trip the latch lever 70 upwardly as shown in Fig. 8, to release the pin 72. This frees the slide bar and permits spring 64 to draw the slide bar 61 to the right, or to closing position of the gripper jaws. The cam edge 69 of the latch lever will thereupon rest on pin 72, with the notch 71 disposed to one side and out of engagement with the pin. The relationship of parts thusly established may be referred to as the preliminary gripping condition, as distinguished from a final or full gripping condition of the device, depicted by Figs. 9 and 10.

To produce the final or full gripping condition above mentioned, and as shown by Figs. 9 and 10, the operator of the machine manipulates a control lever which effects delivery of fluid under pressure to the rear end 86 of hydraulic cylinder 75, thereby to project the piston rod 76 and jaw 58 for increasing the gripping force at the jaws. The force of piston rod advancement is sufficient to shift the slide bar 61 to the left, in opposition to the force of spring 64, until finally the latch lever notch 71 reaches pin 72 and drops into registry therewith. Once the latch lever engages the pin 72, the mechanism is cocked for a subsequent operation. Under the conditions above explained, the full power of piston rod 76 is delivered to the gripping jaws, thus placing them in what may be termed the full or final gripping condition.

Now, if the fluid pressure in the cylinder of Fig. 9 is relieved, the jaw 58 will be retracted by the piston rod, while the jaw 57 remains static as held by engagement of the latch 70. The hide therefore will be released, and the gripper elements will be found disposed in the original cocked relationship depicted by Figs. 5 and 6, ready for subsequent reception of a hide flap. The cocked condition of the gripper is shown in Fig. 2 near the hide flap 18, whereas at the hide flap 17 the gripper is shown in the preliminary gripping position just prior to actuation of the hydraulic cylinder. In the latter condition, the latch means 70 is disengaged, as in Fig. 8. It will be appreciated from the foregoing explanation that a preliminary gripping of the hide is effected simply and instantly by the mere tripping of lever 70 while the operator inserts the hide flap between the gripper jaws. The operator then is free to move to the side of the machine for manipulating the several control levers 35, 53 and 87.

It may here be noted that the gripper cylinders at opposite sides of the carcass are of the single-acting type, with spring-return action. That is, fluid under pressure entering the rear of the cylinder, at 86 of Fig. 9, will project the piston rod 76 in opposition to the force of a spring within the cylinder, which tends always to retract the piston rod. Accordingly, as long as fluid pressure is kept applied to the piston within the cylinder, the rod will hold the jaw 58 against the hide flap 18 with a force dependent upon the pressure of fluid delivered to the cylinder. Immediately upon relief of fluid pressure within the cylinder, by draining the fluid back to the unit 28, the spring within the cylinder will act to retract the piston rod 76 and the clamp jaw 58 associated therewith.

In line with the above explanation, the apparatus may be provided with a third slide valve 88, Fig. 4, which controls flow of fluid through the pipes or tubes 90 and 91 of pressure unit 28, by manipulation of control lever 87 in substantially the manner previously recited in explaining the function of levers 35 and 53. Flexible tubes, not shown, lead from the two hydraulic cylinders 75 and are coupled to the pressure unit at 90 and 91. The arrangement may be such that swinging the control lever 87 to shift the valve 88 in one direction, will supply fluid under pressure to the gripper cylinders 75 for closing the jaws to final position. On the other hand, swinging the same control lever in the opposite direction will relieve the cylinders 75, and permit their enclosed springs to open the jaws and release the hide flaps. This arrangement is very simple and easily understood, requiring no detailed disclosure.

The operation of the device is as follows: A carcass such as 20, hanging from a conveyor, is brought to the front of the machine. Then, as depicted by Figs. 1 and 2, the carriage may be manually projected along the rails 30 to place the back rest 19 against the spinal area, while the grippers 42, 42 assume positions at opposite sides of the carcass. The grippers are adjustable to the size of the carcass, by reason of the pivotal mountings on the carriage at 55 and 56. The jaws of the grippers will be found open or separated, but spring-cocked as in Fig. 5, enabling the operator to insert a hide flap into the jaws of each gripper and then manually trip the latch levers 70—70 to preliminarily hold the hide flaps.

The next step in the procedure is to manipulate the control lever 87 for actuating the gripper cylinders 75 in unison, to fully grip the hide flaps while re-cocking the grippers as previously explained. Then the operator may manipulate the second control lever 53 to activate cylinder 43, for projecting the piston rod, displacing the carriage as in Fig. 3, and stripping the major portion of the hide from the carcass. Finally, said control levers 53 and 87 would be restored to normal position by the operator, for retracting the carriage piston 44 and opening the jaws of the gripper, to free the carcass from the apparatus and permit transfer thereof to a subsequent operating station for final stripping.

It should here be noted that release of the carcass from the stripping apparatus leaves all parts of the apparatus in condition for immediate reception of another carcass, without requiring any preliminary re-setting or conditioning of the apparatus. Upon release of a carcass, the carriage and its piston rod and back rest, as well as the grippers, are all conveniently disposed automatically for a subsequent operation. However, it is possible in some instances that the operator may wish to elevate or lower the back rest 19 to accommodate a carcass which is

not of average proportions, or one which is suspended at an unusual elevation from the conveyor, and in such circumstances the operator would simply manipulate the control lever **35** to either elevate or lower the carriage sub-frame **24** until the back rest assumes the desired position. In the neutral position of said control lever, its associated slide valve **34** will preferably close the fluid lines to the elevating cylinder **25** and thereby maintain any selected elevation of the sub-frame.

In the light of the foregoing explanation, the invention should be seen to present many advantages over prior kindred devices intended for the same general line of service. The instant device possesses important manufacturing advantages due to the simplicity thereof, and in actual usage it contributes substantially to uniformity and regularity in the stripping procedure, with great savings of time and effort realized. The device is durable, reliable, and serviceable, and meets all requirements for uninterrupted production operation economically and with maximum safety. Finally, it will be appreciated that the apparatus as disclosed is subject to various modifications and changes in structural details, within the scope of the claims appended hereto.

What is claimed is:

1. Apparatus for stripping from a conveyor-suspended animal carcass a hide partially severed at the belly to provide opposed flaps of hide to be grasped and pulled, said apparatus comprising in combination, a main frame, a freely shiftable carriage slidably mounted on said main frame so as to be reciprocable transversely of the direction of conveyor travel toward and from the backbone of the animal, a back rest on the carriage to abut the backbone, and means on the carriage shiftably supporting the back rest for movement in substantial parallelism with the line of carriage movement, a pair of hide grippers mounted on the carriage for movement in unison therewith, said grippers being spaced apart to flank the carcass and grip the hide flaps at opposite sides of the carcass, and means on the carriage for providing relative movement between the back rest against the backbone and said carriage while the carriage adjusts itself to the position of the carcass, and the grippers hold the hide flaps, for stripping the hide from the carcass.

2. Apparatus for stripping from a conveyor-suspended animal carcass a hide partially severed at the belly to provide opposed flaps of hide to be grasped and pulled, said apparatus comprising in combination, a main frame, a carriage slidably mounted on said main frame so as to be reciprocable horizontally, and transversely of the direction of conveyor travel, toward and from the backbone of the animal, a back rest on the carriage to abut the backbone, a pair of hide grippers mounted on the carriage for movement in unison therewith, said grippers being spaced apart to flank the carcass and grip the hide flaps at opposite sides of the carcass, and means on the carriage effecting progressive relative movement between the carriage and the back rest while the carriage adjusts itself to the position of the carcass, for stripping the hide from the carcass.

3. Apparatus for stripping from a conveyor-suspended animal carcass a hide partially severed at the belly to provide opposed flaps of hide to be grasped and pulled, said apparatus comprising in combination, a main frame, a carriage slidably mounted on said main frame so as to be free to shift transversely of the direction of conveyor travel and adjustable as to elevation, and reciprocable toward and from the backbone of the animal, a back rest on the carriage and shiftable therewith, and means on the carriage shiftably supporting the back rest for movement in substantial parallelism with the carriage movement, a pair of hide grippers mounted on the carriage for movement in unison therewith, said grippers being spaced apart on the carriage to flank the carcass and grip the hide flaps at opposite sides of the carcass, and means on the carriage for providing relative movement between the back rest against the backbone and said carriage while the carriage adjusts itself to the position of the carcass, and the grippers hold the hide flaps, for stripping the hide from the carcass.

4. Apparatus in accordance with claim 3, wherein the grippers are pivoted upon the carriage for swinging movement in a plane transverse to the backbone.

5. Apparatus for stripping from a conveyor-suspended animal carcass a hide partially severed at the belly to provide opposed flaps of hide to be grasped and pulled, said apparatus comprising in combination, a main upright frame including vertical guide means, a sub-frame movable along said guide means to selected elevations relative to the main frame, and means for elevating and lowering the sub-frame, track means on the sub-frame within the confines of the main frame and having a section projecting laterally beyond the main frame, a freely shiftable carriage reciprocable along the track means and said projecting section of the sub-frame, transversely of the direction of conveyor travel and toward and from the backbone of the animal, a back rest to abut the backbone, and means on the carriage shiftably supporting the back rest for movement in substantial parallelism with the carriage movement, a pair of hide grippers pivotally mounted upon the carriage at opposite sides of the back rest for swinging movement parallel to the plane of carriage movement, said grippers being spaced apart sufficiently to flank the carcass and grip the hide flaps at opposite sides of the carcass, and means on the carriage for providing relative movement between the back rest against the backbone and said carriage while the grippers hold the hide flaps, for stripping the hide from the carcass.

6. Apparatus in accordance with claim 5, wherein the relative movement of the back rest exceeds in extent the length of the hide grippers.

7. Apparatus for stripping from a conveyor-suspended animal carcass a hide partially severed at the belly to provide opposed flaps of hide to be grasped and pulled, said apparatus comprising in combination, a main upright frame including vertical guide means, a sub-frame movable along said guide means to selected elevations relative to the main frame, and means for selectively elevating and lowering the sub-frame bodily, track means on the sub-frame within the confines of the main frame and having a section extending laterally beyond the main frame, a freely shiftable carriage movable along the track means transversely of the direction of conveyor travel, to positions interiorly and exteriorly of the main frame, and toward and from the backbone of the suspended animal, a back rest to abut the backbone, and means on the carriage shiftably supporting the back rest for movement in substantial parallelism with the lateral direction of carriage travel, a pair of hide grippers mounted upon the carriage, said grippers being spaced apart sufficiently to flank the carcass and grip the hide flaps at opposite sides of the carcass, and means on the carriage for providing relative movement between the back rest against the backbone and said carriage while the grippers hold the hide flaps, and the carriage adjusts itself to the position of the carcass, for stripping the hide from the carcass.

8. Apparatus for stripping from a suspended animal carcass a hide partially severed at the belly to provide opposed flaps of hide to be grasped and pulled, said apparatus comprising in combination, a main upright frame, vertical guide means on said frame, a subframe movable along said guide means to selected elevations relative to the main frame, means including a double-acting hydraulic cylinder for elevating and lowering the sub-frame, a fluid pressure generator, and valve means controlling fluid flow to and from the cylinder, track means on the sub-frame extending laterally beyond the main frame and toward the suspended carcass, a freely shiftable carriage movable along the track means, a back rest to abut

the backbone, means including a second double-acting hydraulic cylinder fixed on the carriage, and having a piston rod extending in the direction of the track means, said piston rod having a free end carrying the back rest and movable therewith toward and from the backbone, and valve means controlling fluid flow to and from said second cylinder, a pair of hide grippers mounted upon the carriage, including hydraulically operated jaws and valve means controlling said jaws, the grippers being spaced apart sufficiently to flank the carcass and grip the hide flaps at opposite sides of the carcass upon actuation of the gripper jaws.

9. Apparatus in accordance with claim 8, wherein is included means on the main frame to support the fluid pressure generator and a series of control levers for the valve means thereof.

References Cited in the file of this patent

UNITED STATES PATENTS

1,822,501	Onsrud	Sept. 8, 1931
1,827,258	Payzant	Oct. 13, 1931
2,461,466	Coad	Feb. 8, 1949
2,494,138	De Moss	Jan. 10, 1950
2,496,394	Hincks	Feb. 7, 1950
2,509,991	Schenke	May 30, 1950
2,530,085	Shaff	Nov. 14, 1950
2,696,633	Hincks	Dec. 14, 1954

FOREIGN PATENTS

667,670	Germany	Dec. 6, 1938