(No Model.) 4 Sheets—Sheet 1.

C. G. PARKER.

MACHINE FOR FILING AND SETTING SAWS.

No. 456,276. Patented July 21, 1891.

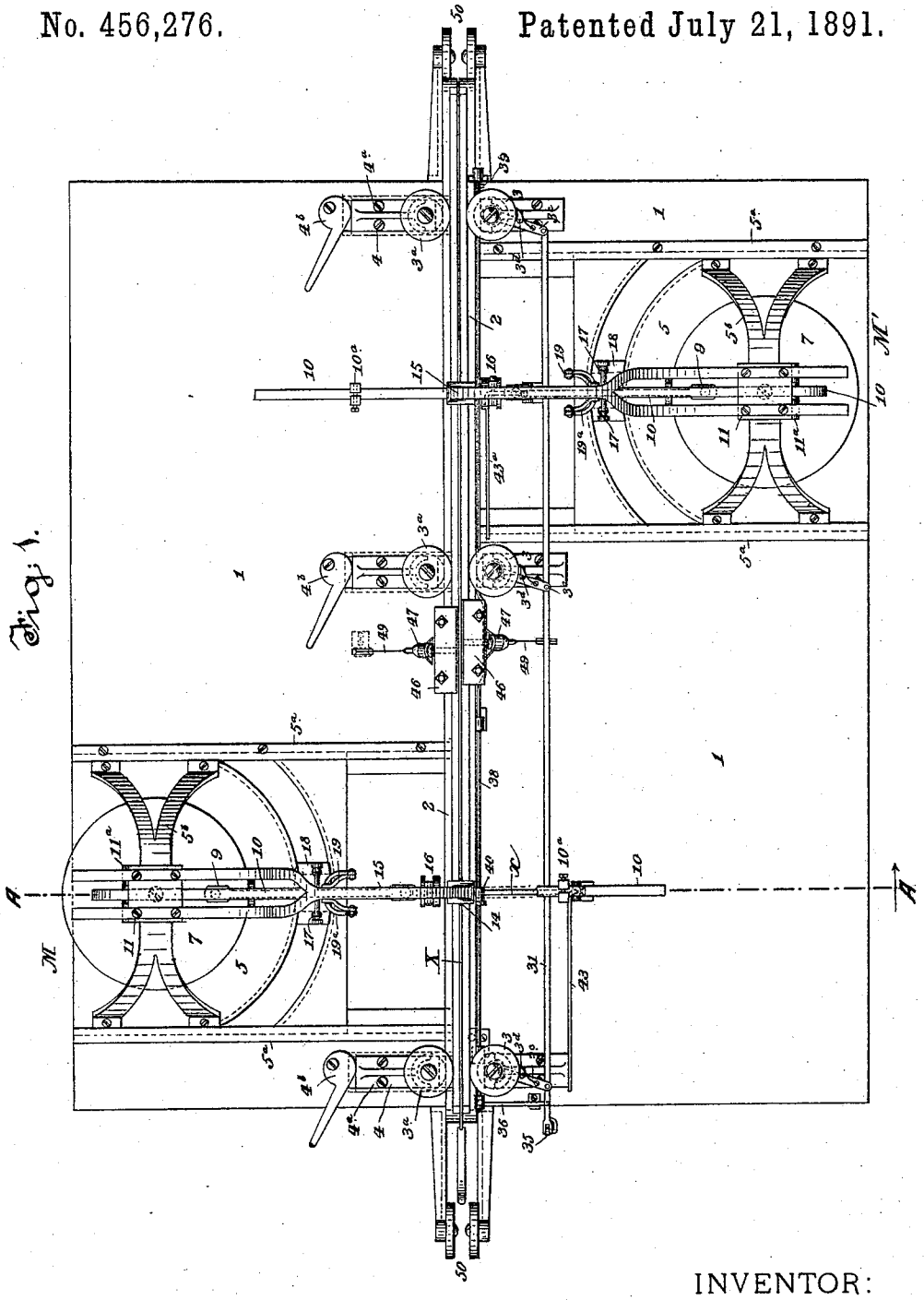

Fig. 1.

INVENTOR:

Charles G. Parker

By Henry Connett

Attorney.

WITNESSES:

John A. Rennie

J. H. Ashbridge

THE NORRIS PETERS CO., PHOTO-LITHO., WASHINGTON, D. C.

(No Model.) 4 Sheets—Sheet 2.

C. G. PARKER.

MACHINE FOR FILING AND SETTING SAWS.

No. 456,276. Patented July 21, 1891.

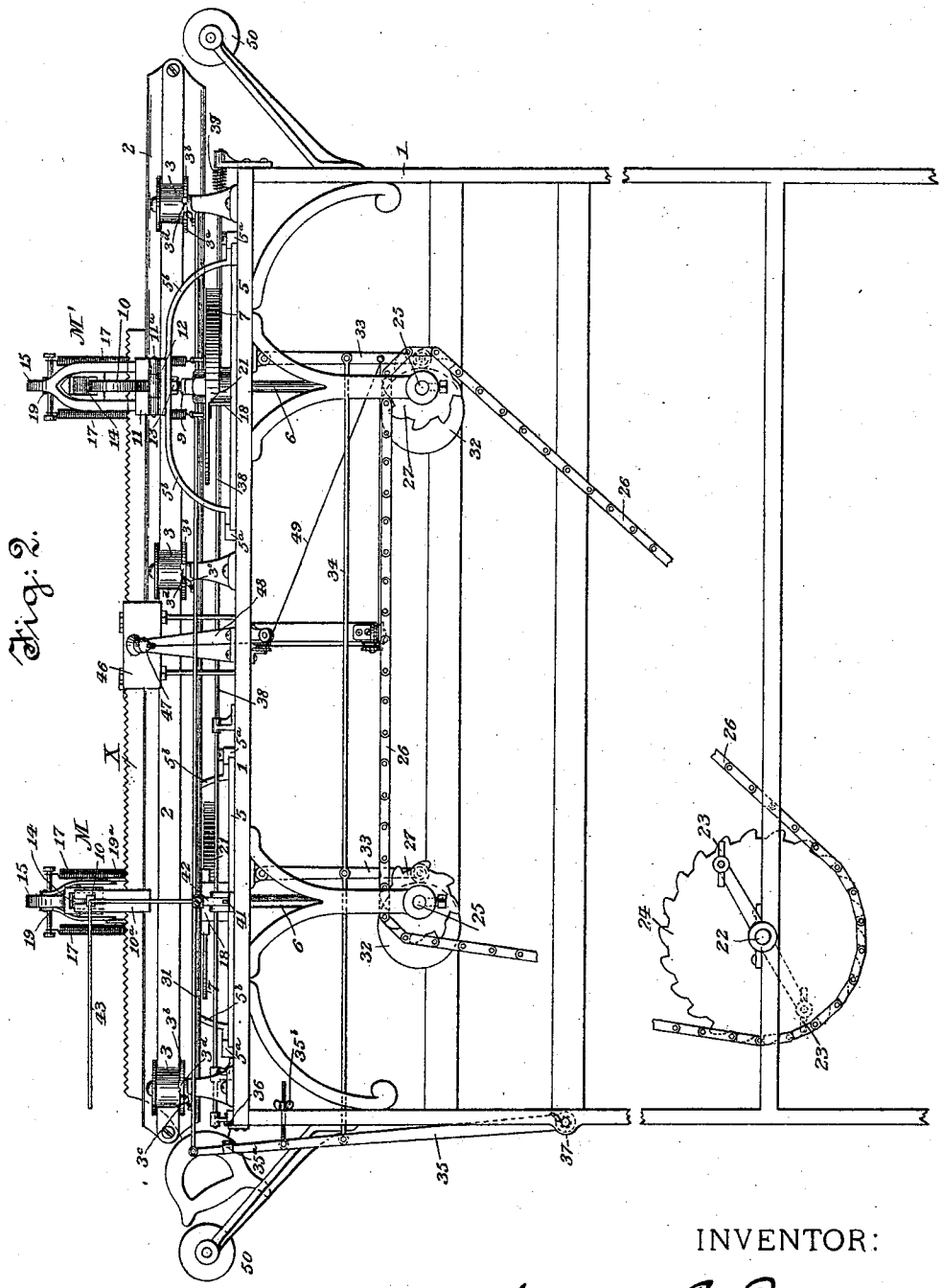

Fig: 2.

INVENTOR:

Charles G. Parker

By Henry Connett

Attorney.

WITNESSES:

John A. Rennie

J. H. Caplinger

THE NORRIS PETERS CO., PHOTO-LITHO., WASHINGTON, D. C.

(No Model.) 4 Sheets—Sheet 3.

C. G. PARKER.

MACHINE FOR FILING AND SETTING SAWS.

No. 456,276. Patented July 21, 1891.

Fig. 3.

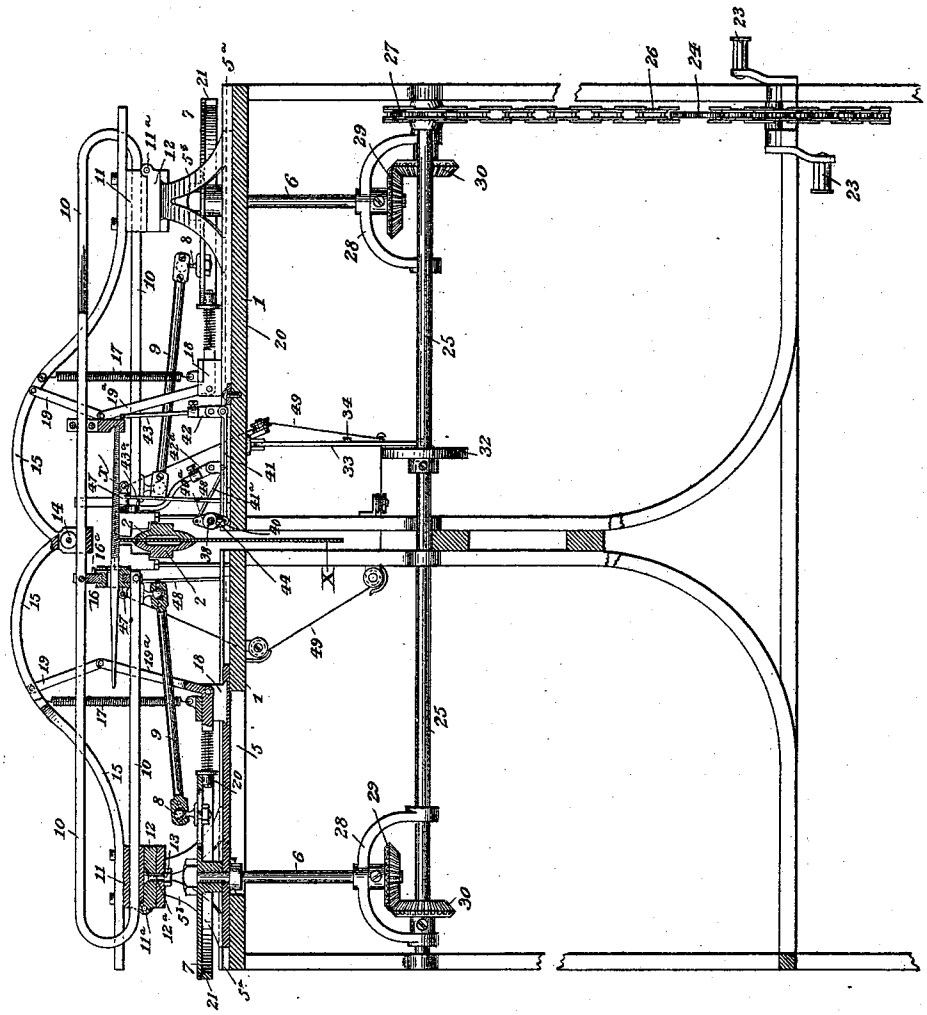

INVENTOR:

Charles G. Parker

By Henry Connett

Attorney.

WITNESSES:

John A. Rennie.

H. Hopkinson

THE NORRIS PETERS CO., PHOTO-LITHO., WASHINGTON, D. C.

(No Model.) 4 Sheets—Sheet 4.

C. G. PARKER.

MACHINE FOR FILING AND SETTING SAWS.

No. 456,276. Patented July 21, 1891.

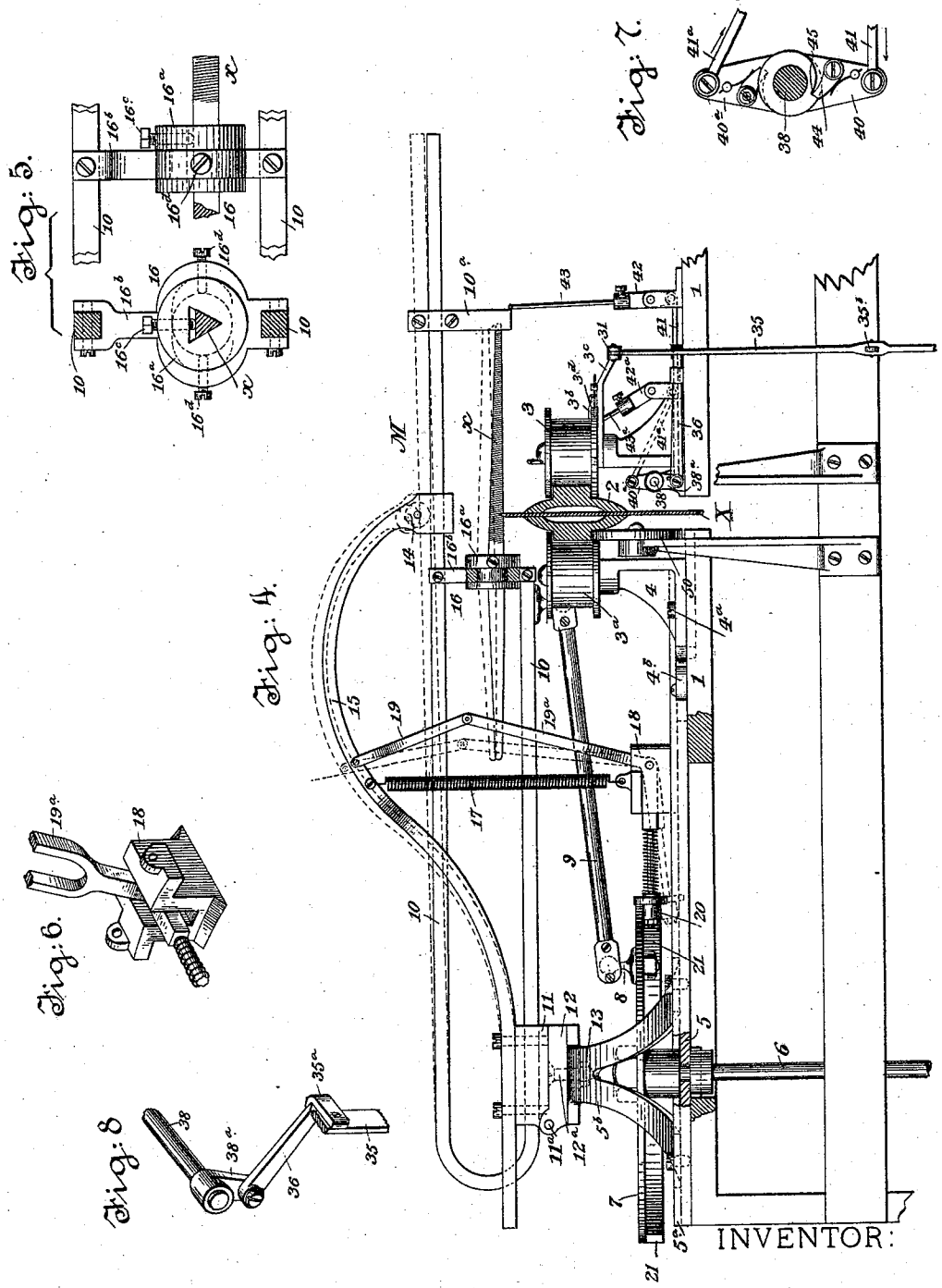

INVENTOR:

Charles G. Parker

By Henry Connett

Attorney.

WITNESSES:

John A. Rennie

J. L. Caplington

THE NORRIS PETERS CO., PHOTO-LITHO., WASHINGTON, D. C.

UNITED STATES PATENT OFFICE.

CHARLES G. PARKER, OF BROOKLYN, ASSIGNOR OF ONE-THIRD TO LAURA PARKER GOODWIN, OF NEW YORK, N. Y.

MACHINE FOR FILING AND SETTING SAWS.

SPECIFICATION forming part of Letters Patent No. 456,276, dated July 21, 1891.

Application filed March 12, 1891. Serial No. 384,791. (No model.)

To all whom it may concern:

Be it known that I, CHARLES G. PARKER, a citizen of the United States, and a resident of Brooklyn, Kings county, New York, have invented certain Improvements in Machines for Filing and Setting Saws, of which the following is a specification.

My invention relates to that class of machines adapted for filing and setting saws wherein the saw is fed along and the file and set are operated automatically.

The object of the invention is in part to simplify and cheapen the construction, and in part to adapt the machine to the filing and setting of hand-saws, such as are used by carpenters.

My machine, as herein illustrated, is, in fact, especially designed for use in the carpenter-shop, where the amount of work required of such a machine will not be excessive nor of a greatly-varied character, and where the cost of the machine is an important consideration. The invention is adapted, however, for embodiment in machines for filing and setting saws of any kind.

In the accompanying drawings, which serve to illustrate my invention, Figure 1 is a plan of a double-file machine embodying my invention, and Fig. 2 is a side elevation of the same. Fig. 3 is a transverse vertical section in the broken plane, indicated by line A A in Fig. 1. Fig. 4 is a view of one of the filing mechanisms M on a scale about double that of the principal figures. Fig. 5 shows the file-holder in front and side elevation detached, and on a scale about double that of the principal figures. Figs. 6, 7, and 8 are detail views that will be hereinafter described.

Before minutely describing my invention I will say that it comprises a frame or table to support the mechanism, a clamp for the saw, means for feeding the saw-clamp along over the table intermittently, each feeding impulse being equal to the space occupied by two teeth of the saw in the clamp, a double saw-set adapted to set two adjacent teeth of the saw simultaneously, said set being actuated through the medium of the clamp-feeding mechanism, two like saw-filing mechanisms adapted to file the teeth of the saw at two different points simultaneously from opposite sides, said mechanisms being so constructed that the file may be made to move in a path at various degrees of obliquity with the plane of the saw, and means whereby the reciprocating file-carriage acts to set the saw-feeding mechanism in operation whenever the file shall have cut down to a predetermined depth. I employ two filing mechanisms arranged to operate from opposite sides of the saw in order to facilitate the filing of cross-cut saws. Otherwise it would be necessary to pass the saw under the file once with the file set at a certain angle, and then pass it under again with the file set at the opposite angle. The reason for this will be well understood by those skilled in filing saws. However, so far as the filing mechanisms are concerned, only one of such mechanisms is absolutely necessary.

In the invention as embodied in the drawings, 1 is a suitable frame or table to support the mechanism.

In Figs. 2 and 3 portions of the legs of the table have been broken away for lack of room to represent them on the scale chosen. The saw-clamp 2 is composed of two jaws or clamping-strips, mounted between pairs of rollers which rotate on upright journals set on the bed of the table. The rollers are flanged to form keepers for the clamp, (see Fig. 4,) which is thus prevented from working up or down when fed along. The rollers 3 are the feed-rollers of the clamp, and their journal mountings are fixed on the table. The rollers 3^a are the clamping-rollers, and the journal mountings 4 of these rollers are set to slide toward and from the clamp in guides on the table, and each mounting or bracket 4 may be provided with a screw 4^a to secure it to the table when set, and a cam 4^b is arranged back of it on the table to force it up toward the clamp.

X represents the saw in the clamp.

The means for feeding the clamp forward intermittently to bring the teeth of the saw in proper order or succession under the files will be hereinafter described.

Fig. 1 shows the positions of the two like filing mechanisms indicated generally by the letters M M′ in this figure. The saw-clamp 2 is arranged in the longitudinal axis of the table, and a filing mechanism is arranged at

each side of said clamp. I will only describe minutely one of said mechanisms, with especial reference to Figs. 4, 5, and 6. 5 is a carriage, mounted to slide in transversely arranged keepers or guides 5^a on the bed of the table 1, one of said guides being movable and provided with screws or other means for fixing it in position so as to clamp said carriage down firmly on the table. In this carriage is rotatively mounted an upright shaft 6, on which is secured a crank-wheel 7. In a slotted bearing in this wheel is secured a crank-pin 8, which is coupled by a connecting-rod 9 to a reciprocating file-carrier 10. As herein shown, this carrier is a U-shaped, bent rod, the lower branch or bar of which has a sliding bearing in a block 11, hinged at 11^a to a block 12, pivoted on a frame 5^b, forming part of the carriage 5. The pivoted stud 12^a of the block 12 is arranged directly over the center of the crank-wheel 7, and it is provided with a nut 13 or other suitable means for clamping the block 12 to the frame 5^b in any position at which it may be set. The upper branch or bar of the file-carrier 10 has a sliding bearing 14, in an arm 15, secured to the block 11.

Between the upper and lower bars of the carrier 10 is arranged the file-holder 16, (see Fig. 3,) which comprises a sleeve 16^a, rotatively mounted in a bearing-piece 16^b. The sleeve has in it a triangular aperture large enough to receive the largest triangular file, and it is provided with a set-screw 16^c to hold the file x firmly in place when set therein. This sleeve has a circumferential groove in it where it is embraced by the bearing-piece 16^b, and this latter has a set-screw 16^d to prevent the rotation of the sleeve in its bearing and to adjust said sleeve laterally. This holder 16 provides the adjustments necessary to adapt the file to all classes of work. The extremity of the file x is supported by a bar 10^a, mounted on the upper bar of the file-carrier 10. Rotation of the crank-wheel 7 will impart a longitudinally-reciprocating motion to the file, and the latter is held down to its work with an elastic pressure afforded by springs 17, which are attached at their upper ends to the arm 15 and at their lower ends to a block 18, mounted in a curved guideway in the carriage 5, said guideway being concentric with the crank-wheel 7. The file is lifted out of contact with the saw on its back-stroke, and this movement is effected by turning the block 11 on its hinge 11^a. The lifting of the file and its carrier is accomplished by toggle-links 19. The upper ends of the links of the upper pair of toggles are coupled to the arm 15, and the lower pair of links are brought together to form one link, and this is pivoted in the block 18. This construction is clearly shown in Fig. 6, which is a perspective view of the block detached, with a part of the lower link of the toggle. At the lower end of the lower link of the toggle said link is provided with an arm 19^a, which carries at its free end a roller 20, which takes under the edge of the crank-wheel 7, on which is formed a cam 21. When the cam depresses the roller and arm, the toggle raises the arm 15 and with it the file and its carrier, as indicated by the dotted lines in Fig. 4. The cam 21 occupies one-half of the circumference of the wheel 7, and it is so arranged with reference to the crank-pin 8 that the file will be lifted during the back stroke thereof.

In Fig. 4 the file is represented as near the end of its forward or operative stroke and the cam 21 as on the point of raising it. This cam will be simply a pendent rim on the wheel 7 with a slight incline at its ends, as seen at the right in Fig. 2. The rotary movement of the wheel 7 while passing centers and while the file is practically at rest will suffice to effect the raising and lowering of the file. I prefer to flange the roller 20, as seen in Fig. 4, and to back it with a spring 20^a, so that it will be held up to the wheel 7 with a yielding pressure.

The wheel 7 is rotated by mechanism seen in Figs. 2 and 3. In the frame 1 is rotatively mounted the power-shaft 22, here represented as furnished with cranks and pedals 23, similar to those of a velocipede, so that the shaft may be driven by the feet. On this shaft is a sprocket-wheel 24, which drives the two cross-shafts 25 25, through the medium of a a chain belt 26 and sprocket-wheels 27 27 on the respective cross-shafts. These two cross-shafts drive the respective filing mechanisms M M′. On the shaft 6 of the crank-shaft 7, (see Fig. 3,) which shaft has a bearing in a yoke 28, below the table-bed, is fixed a bevel-wheel 29, which gears with a bevel-wheel 30 on the cross-shaft 25. Thus the shaft 25 drives the shaft 6.

In order to permit of shifting the carriage 5 in its guides without throwing the wheels 29 and 30 out of gear, the yoke 28 is made to embrace the shaft 25 and the wheel 30, which slides thereon when such adjustment is made, but cannot escape from engagement with wheel 29 by reason of said yoke. The wheel 30 may be detachably secured to its shaft by a set-screw, or it may be splined on the shaft.

I will now describe the means employed for feeding the saw-clamp 2 after each filing operation on a tooth. On each roller 3 is a ratchet-wheel 3^b, and pivoted to swing on the roller-journal is a radial pawl-arm 3^c, which carries a spring-pawl 3^d, in engagement with the teeth of the ratchet. The pawl-arms 3^c are all coupled to a feed-bar 31, which is adapted to play longitudinally in guides or slide-bearings on the table, as seen in Fig. 1. When this feed-bar is moved toward the right in Fig. 1 the pawls 3^d act to rotate the several rollers 3 and to feed or move the saw-clamp 2 longitudinally. This feeding movement of the bar is effected by cams 32 on the respective transverse shafts 25, which act, respectively, on pendent cam-arms 33, and these cam-arms are coupled to an operating-rod 34,

which is coupled (see Fig. 2) to a lever 35, which is coupled at its upper end to the feed-bar 31. When the feed-bar is thus actuated by the cams 32, the lever 35 is drawn up and caught by a latch 36, which holds said lever in this position and permits the cams 32 to continue their rotation without further effect on the feed-bar. The feed will now remain inoperative until the file shall have cut its way down to the proper depth, which may require several strokes. When this depth shall have been reached, some part of the gradually-descending file-carrier will find in its path a lever, and on its last forward stroke it will strike said lever and through it shift the latch 36 and free it from the lever 35. This lever (see Fig. 2) has a retracting-spring 37 at the point where it is pivoted to the frame, and as soon as said lever is freed this spring instantly retracts it, and with it the feed-bar 31 and the feeding-pawls 3^d. This retracting movement of the feeding-pawls takes place while the file is moving forward and at the end of its forward stroke, and while the file is lifted and is moving back the cams 32 come into action on the arms 33 and feed the saw-clamp forward, as before described. Thus the shifting of the saw-blade is effected while the file is raised clear of the teeth.

Before minutely describing the device whereby the last forward movement of the file-carriage frees the retracting-lever 35, I will say that either one of the filing mechanisms M M′ may be thrown out of gear and rendered inoperative for the time by loosening the set-screw which secures the sprocket-wheel 27 on the shaft 25, from which that filing mechanism is driven, and as either of these filing mechanisms may be operated thus alone, it is necessary that the file-carriers of both of said mechanisms shall be adapted to set the feeding devices of the saw-clamp in operation; but when both mechanisms are operating simultaneously one of them only need be set to effect this object.

On the table of the machine and extending longitudinally thereof is mounted a torsion rock-shaft 38. I denominate this a "torsion-shaft," as it has on it a spring 39, which tends to hold it in one position, and when the shaft shall be rocked the spring will bring it back to this position. On this shaft is fixed an arm 38^a, (see Fig. 8, which shows these parts detached,) to which is coupled the latch 36. The free end of this latch is beveled and stands normally in engagement with a beveled keeper 35^a on the lever 35. When the shaft 38 is rocked in one direction, this latch is withdrawn and the lever set free. The spring 39 returns the parts, and when the lever 35 is next brought up by the cams the keeper wipes over the latch, the parts again assuming the position seen in Fig. 8. In Fig. 2 the feeding movement is just beginning.

Each of the file-carriers is adapted to rock the shaft 38 and draw the latch, thus freeing the lever 35; but as their forward movements are in opposite directions, the devices employed to enable them to effect this are substantially alike in construction and principle of operation, but are reversed in position.

The tripping device adapted to be actuated by the file-carrier of the filing mechanism M, (seen at the left in Figs. 1 and 2 and shown on a larger scale in Fig. 4,) comprises an arm 40, mounted loosely on the rock-shaft 38, and coupled by a link 41 to the lower end of a lever 42, pivoted in a bracket on the table-bed. In the upper end of this lever is set a tappet-rod 43 of an L form, some part of which is arranged to stand in the path of the bar 10^a or some other part of the file-carrier. On the arm 40, which is seen in Fig. 7 on a large scale, is a spring-pawl 44, which engages a shoulder 45, herein shown as formed on a collar fixed on the rock-shaft. Now when the file shall have cut its way down far enough on its last forward stroke the bar 10^a strikes the tappet-rod 43 and rocks lever 42, and this motion is communicated through link 41, arm 40, pawl 44, and shoulder 45 to the rock-shaft, which rocks and draws the latch 36.

The mechanism whereby the file-carrier of the mechanism M′ draws the latch 36 has precisely the same elements, and I have used the same numerals to designate them, adding the letter *a* to distinguish them. For example, 40^a is an arm on the rock-shaft similar to arm 40, but projecting in the opposite direction from the shaft. This arm 40^a is coupled by a link 41^a to a lever 42^a, bearing a tappet-rod 43^a. In this case (see Fig. 3) the upper end of the tappet-rod is arranged in the path traversed by the lower bar of the file-carrier; but this is a mere matter of convenience. The retracting movement of the lever 35 is limited, and this may be effected by a screw-rod and nut 35^b. (Seen in Fig. 2.)

Fig. 1 shows the file set to play at right angles to the plane of the saw-blade, and in some cases they will be required to operate in this way. Ordinarily, however, the path in which they move will be oblique to the plane of the blade, and when set to operate in this manner the carriage 5 will be moved inward or toward the clamp, so as to bring the file properly over the saw. The angle of obliquity may be varied considerably within limits.

The set for the saw-teeth is arranged by preference between the filing mechanisms M M′, and it consists, substantially, of two like sets arranged to face each other on opposite sides of the saw-clamp. Each of these sets consists of a steel punch mounted in a block 46, its axis being at right angles to the plane of the saw-blade held in the clamp. These punches are arranged to impinge upon adjacent teeth of the saw from opposite sides. Each punch is provided with a hammer 47, provided with a spring-handle 48, and to each hammer is attached an operating cord or chain 49, which is carried over guide-pulleys and attached to one of the pendent arms 33. Consequently when the arm 33 is

swung back by the cam in feeding the saw-clamp the hammers 77 will be drawn back and their spring-handles put under tension. They will remain in this position until the latch is withdrawn and the retracting-lever 35 released, when they will be freed and will strike the respective punches simultaneously a smart blow. The force of the blow will be governed by the stiffness of the spring-handle of the hammer.

The table or frame may be provided at its ends with roller-supports 50 for the saw-clamp.

Having thus described my invention, I claim—

1. In a machine for filing saws, the combination, with a clamp to hold the saw, of a carriage 5, mounted in keepers or guides on the machine-frame, a shaft 6, rotatively mounted in said carriage with its axis at right angles thereto, a crank-wheel 7 on said shaft, the block 12, mounted pivotally on said carriage, its pivot coinciding with the axis of the crank-wheel, the block 11, hinged to the block 12, the file-carrier 10, mounted in slide-bearing in the block 11, the connecting-rod 9, coupled at one end to the file-carrier and at the other end to the pin of said crank-wheel, the arm 15, fixed to block 11, and providing a bearing for the file-carrier, a holder for the file mounted on the file-carrier, a spring which holds the file down to the saw with a yielding pressure, and means for raising the file on its backward stroke, substantially as set forth.

2. In a machine for filing saws, the combination, with the clamp for the saw, of the crank-wheel 7 and its pin 8, the file-carrier provided with a reciprocating holder for the file and mounted in a hinged bearing, whereby it may be raised while in motion, the rod 9, coupled by universal joints to the said file-carrier and to the pin of said crank-wheel, the arm 15, the spring which holds the file-carrier down with a yielding pressure, the block 18, the toggles between said arm 15 and block 18, the cam 21 on the crank-wheel 7, and means, substantially as described, whereby the cam 21 actuates the said toggle and raises the file-carrier on the backward stroke.

3. In a machine for filing saws, the combination, with the saw-clamp 2, of the rollers 3 and 3^a, in which said clamp is mounted, means, substantially as described, for setting the rollers 3^a up to the clamp, a ratchet mechanism for rotating the rollers 3 and moving the clamp endwise intermittently, and a rotating cam for actuating said ratchet mechanism, substantially as set forth.

4. In a machine for filing saws, the combination, with the saw-clamp and intermittently-operating mechanism for feeding said clamp longitudinally, of the reciprocating file-carrier, and intermediate mechanism, substantially as described, whereby the clamp-feeding mechanism is set in operation by the file-carrier on its last forward stroke, substantially as set forth.

5. In a machine for filing saws, the combination, with the reciprocating file-carrier, of the saw-clamp mounted in the rollers 3 and 3^a, the ratchet-wheel 3^b on the roller 3, the pawl-arm 3^c, and pawl carried thereby and engaging with the teeth of said ratchet-wheel, the feed-bar 31, the spring-actuated retracting-lever 35, to which said feed-bar is coupled, mechanism, substantially as described, for moving said lever 35 forward and through it effecting the feeding of the saw-clamp, a latch mechanism which holds the lever 35 normally in its advanced position, a tripper-rod 43, arranged in the path of some part of the file-carrier, and intermediate latch-actuating mechanism, whereby when said carrier strikes the tripper-rod said latch will be withdrawn and the lever 35 released, substantially as set forth.

6. In a machine for filing saws, the combination, with the saw-clamp and the reciprocating file-carrier, of the feed-ratchet, the pawl, and its arm adapted to rotate said ratchet, the feed-bar coupled to said pawl-arm, the spring-actuated retracting-lever 35, coupled to said feed-bar, the pendent cam-arm 33, the rod 34, coupling said arm with the lever 35, the rotating cam 32, which actuates the cam-arm 33, the rock-shaft 38 and its spring, the latch 36, coupled to an arm on said rock-shaft and adapted to engage a keeper on the lever 35, the lever 42, the tappet-rod 43 secured thereto, said tappet-rod being arranged in the path traversed by some part of the file-carrier when the latter is on its last forward stroke, and intermediate mechanism between the lever 42 and rock-shaft 38, whereby the latter rocks the former, substantially as set forth.

7. In a machine for filing saws, the combination, with the file-carrier, of the file-holder 16, said file-holder comprising the bearing-piece 16^b, of ring-like form, secured to said carrier, the collared sleeve 16^a, mounted in said bearing and provided with a triangular aperture for the file, and a set-screw 16^c, and the set-screws 16^d in the bearing-piece for the lateral adjustment of said sleeve.

In witness whereof I have hereunto signed my name in the presence of two subscribing witnesses.

CHARLES G. PARKER.

Witnesses:
HENRY CONNETT,
CHAS. A. WALSH.