(12) UK Patent Application (19) GB (11) 2579605 (13) A

(43) Date of A Publication 01.07.2020

(21) Application No: 1819867.1

(22) Date of Filing: 05.12.2018

(51) INT CL:
E06B 3/28 (2006.01)

(56) Documents Cited:
GB 2187782 A
WO 2002/029471 A1
US 5253457 A
US 4409758 A
US 20060037261 A1
GB 1031929 A
FR 002341731 A1
US 4452020 A
US 20110047875 A1

(58) Field of Search:
INT CL **E06B**
Other: **EPODOC, WPI**

(71) Applicant(s):
Clear Amber Group Ltd
Inveralmond Place, Inveralmond Industrial Estate, Perth, PH1 3TS, United Kingdom

(72) Inventor(s):
Murray Michel

(74) Agent and/or Address for Service:
Marks & Clerk LLP
Aurora, 120 Bothwell Street, GLASGOW, G2 7JS, United Kingdom

(54) Title of the Invention: **Glazing system**
Abstract Title: **Structural component for a glazing system**

(57) The component 10 is configured to support a panel of the glazing system. The structural component comprises at least one receiving means 40 for receiving the panel 15 of the glazing system and at least one attachment mechanism 65 for attaching the structural component to a mount 60 comprised in or on the glazing system. The attachment mechanism may be configured to physically fix to the mount via a snap fix, interface fit or interlocking fit. The structural component may comprise a removal mechanism (205, Fig 2) configured to be engaged by a removal tool (210, Fig 2), the mechanism being provided on a side or sides of the structural component. The removal mechanism may comprise a slot or recess configured to receive part of the removal tool and the slot or recess may be provided with a sloping or non-perpendicular surface (215, Fig 2)that extends away and obliquely to an adjacent portion of the side of the structural component. Also disclosed is a mount for mounting the structural component, an assembly comprising said structural component and a method of manufacturing said structural component.

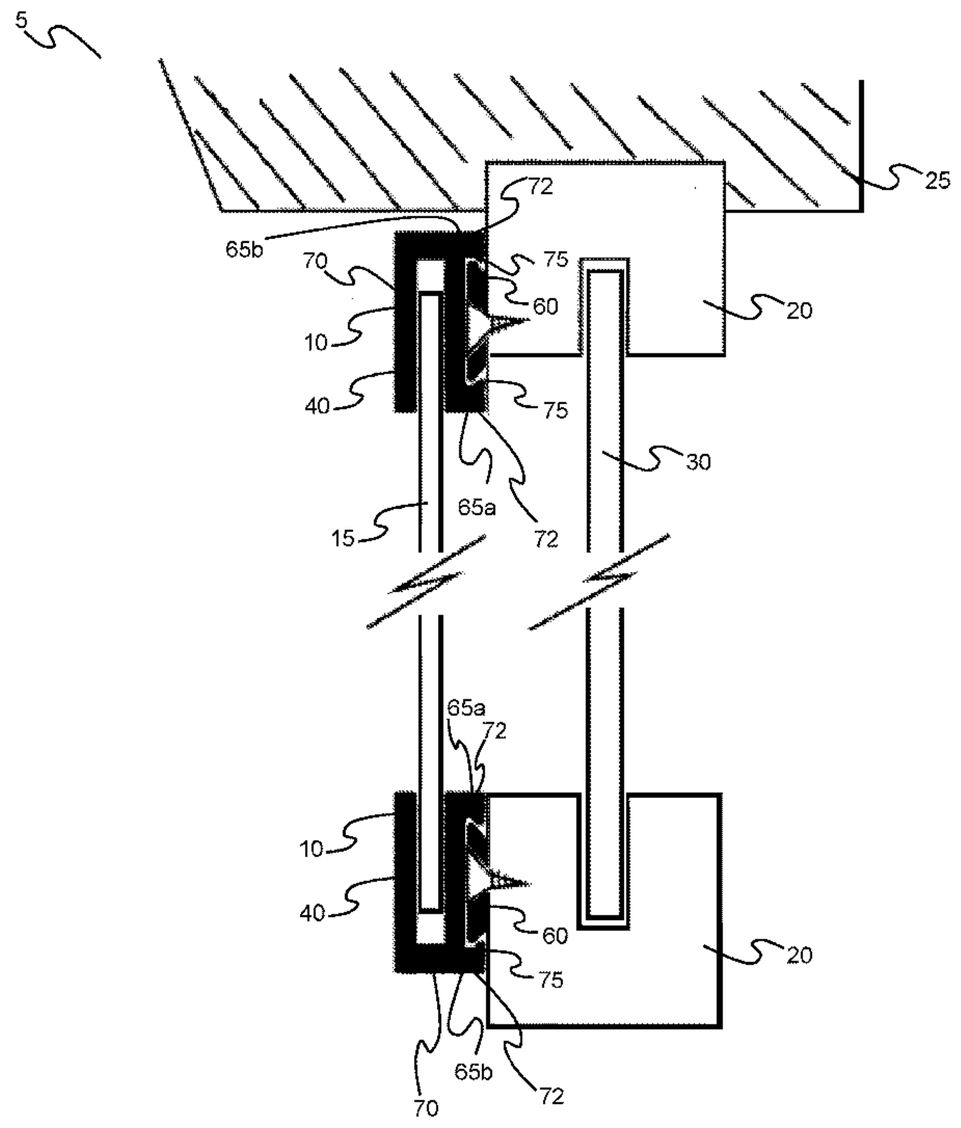

Fig. 1

GB 2579605 A

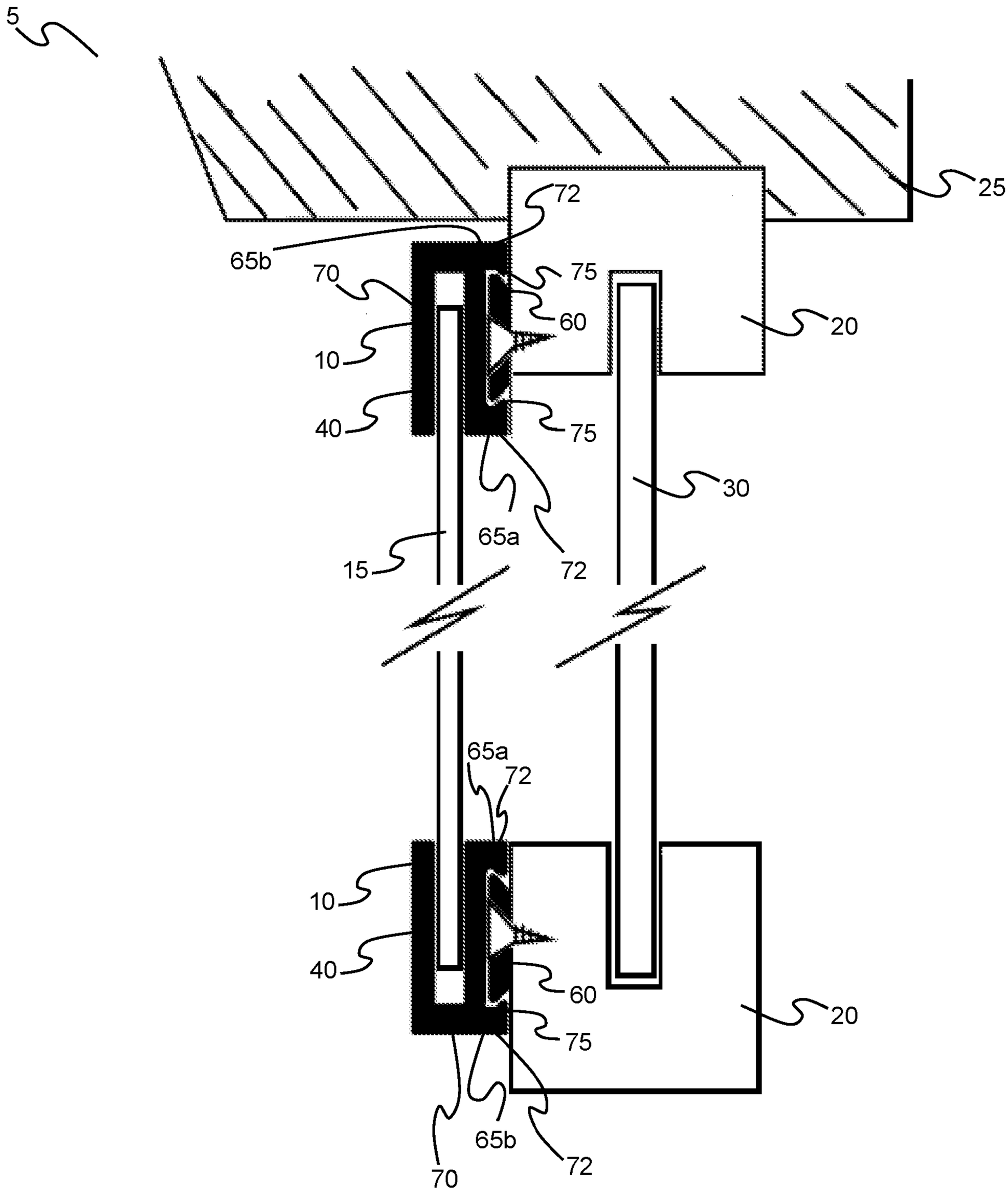
5
72
25
65b
70
75
60
20
10
40
75
30
65a
15
72
65a
72
10
40
60
75
20
65b
70
72

Fig. 1

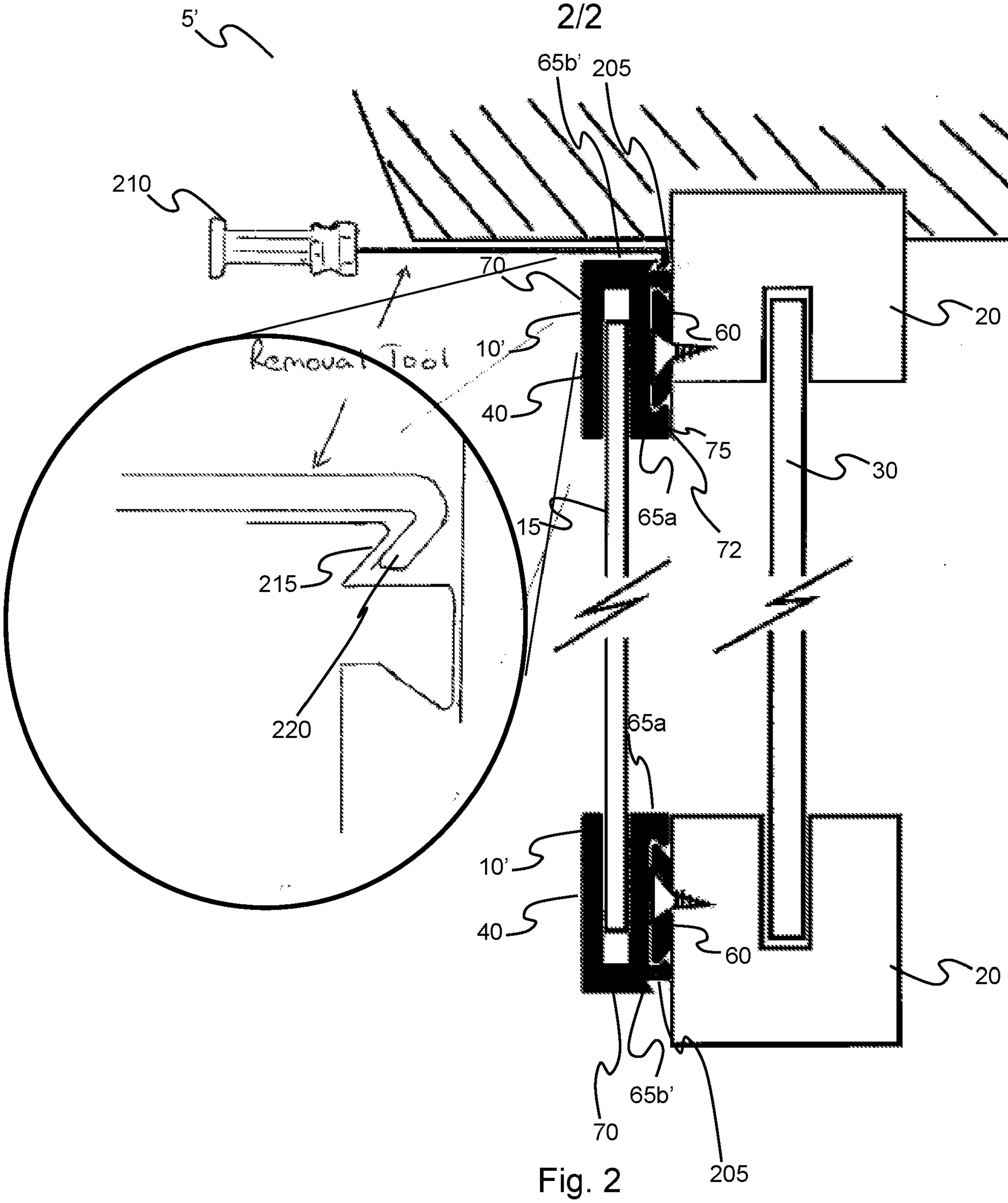
5'
65b'
205
210
25
70
20
Removal Tool
10'
60
40
75
30
15
65a
72
215
220
65a
10'
40
60
20
70
65b'
205

Fig. 2

GLAZING SYSTEM

FIELD

The present disclosure describes a glazing fixing system such as, but not limited to, a fixing system for fixing secondary glazing panels.

BACKGROUND

Glazing systems, such as secondary glazing systems, are generally formed from structural pieces that support one or more panels. The structural pieces may vary in shape, form and function depending on the design of the glazed system.

The structural pieces are generally rigid and can be formed or a metallic material such as aluminium or aluminium alloy or form a rigid polymeric material. The panels can be glass panes, integrated glass units, polymeric panels, such as polycarbonate panels, and/or the like.

Insulated glazing such as double or triple glazing comprise a plurality of panels (usually two or three panels) supported in a frame and separated by a vacuum or heat transfer resisting gas, that is usually sealed between the panels by the structural pieces that form the frame. Insulated glazing is a popular category of glazing system as it reduces heat transfer through the glazing system.

Secondary glazing systems comprise the addition of an additional panel to an existing glazing system such as a window or door. There are a wide range of different secondary glazing systems available.

SUMMARY

Aspects of the present disclosure are defined by the independent claims appended herewith. Preferred but optional features are defined by the dependent claims appended herewith.

According to a first aspect is a structural component for a glazing system, the structural component being configured to support a panel of the glazing system. The structural component may comprise at least one receiving means for receiving the panel of the glazing system. The structural component may comprise at least one attachment mechanism for attaching the structural component to a mount, which may be comprised in or provided on the glazing system. The attachment mechanism may be configured to physically fix to the mount, e.g. via a snap fix, interference fit, interlocking fit, and/or the like.

The attachment mechanism may be configured to releasably attach to the mount. The attachment mechanism may be configured to attach to the mount by physically accommodating and/or interacting with the mount. The attachment mechanism may optionally not be a magnetic or adhesive attachment mechanism or at least not solely a magnetic and/or adhesive attachment mechanism.

The attachment mechanism may comprise at least one, e.g. two or more, engagement members, which may extend from a body of the structural component, e.g. from a same face or side of the body of the structural component. The engagement members may be configured to snap fix, interference fit and/or interlock with the mount.

There may be many mounting mechanisms that could be used, such as adhesive application, screw fix, magnetic fixing and the like. However, these may all suffer from one or more issues such as, not being releasable or reusable, lack of locking strength or durability, being time consuming or difficult to fit and remove or suffer from unwanted incorrect releases. The use of a snap fix, interference fit, or interlocking fit, preferably a snap fix, has surprisingly been found to provide a reusable releasable mechanism having sufficient locking strength and durability, that at the same time allows quick and easy fitting and removal without unwanted incorrect releases.

Since a two part mounting arrangement may be used, i.e. comprising a mount that may be semi-permanently fixed to the frame and the structural component that may releasably attachable to the mount, then it may be possible to more effectively replace the secondary glazing (e.g. if it is damaged).

At least one or each engagement member may comprise a holding member, which may be configured to be located behind at least a part of the mount when the structural component is attached to the mount. The holding member may comprise a tine or tooth. The holding member may comprise a tapered, reducing, or generally triangular cross sectional profile. At least one or each engagement member may comprise an extending portion, which may be configured to extend between the body of the structural component and the holding member, e.g. to space the holding member from the body. The holding member and the extending portion of at least one or each of the engagement members may define a recess for receiving a part of the mount, in use, e.g. when the attachment mechanism is attached to the mount.

The extending portion may extend substantially perpendicularly or between 40^0 and 90^0, e.g. between 45 or 10° and 90^0 from the body of the structural component. The holding member may extend generally perpendicularly from the extending portion

and/or generally parallel to the body of the structural component. The holding member may extend between 10° and 90° from the extending portion.

The attachment mechanisms may comprise a plurality of engagement members. At least one of the engagement members may be or comprise a first engagement member and at least one other of the engagement members may be or comprise a second engagement member. The first and second engagement members may face each other. The first and second engagement members may be opposing, e.g. each first and second engagement member may be provided in an opposing pair. The holding members of the first and second engagement members may face and/or extend generally towards each other and/or extend coplanarly. The holding member of the one or more first engagement members may face or generally extend towards the one or more second engagement members (or the holding member thereof) and/or the holding member of the one or more second engagement members may face or generally extend towards the one or more first engagement members (or the holding member thereof).

The attachment mechanism may be configured such that, when attached to the mount, the attachment mechanism extends around at least part of all four sides of the mount. The attachment mechanism may be configured such that, when attached to the mount, the base may be provide on at least one side of the mount and/or the extending portion of at least one, two or more or each of the attachment mechanisms (e.g. the first and second attachment mechanisms) extend along other sides of the mount and/or the holding member(s) of at least one, two or more or each of the attachment mechanisms extend around and/or along a further side of the mount, e.g. so that at least part of the mount is provided between the holding members and the base of the structural component.

The attachment mechanism may be configured such that, when attached to the mount, the extending portion of the first engagement member extends along a side of the mount that is on an opposite side of the mount to the side along with the second engagement member extends.

The attachment mechanism may define a slot which may longitudinally extend along the attachment mechanism. The slot may be defined at least in part by the base, and/or by the extending portions and the holding members of the first and second engagement members. The slot may have a slot width (which may be defined by the separation of the first and second engagement members and/or may be a direction opposite to a long or longitudinal direction of the slot) and at least part of the slot width may decrease in a direction from the base towards a distal end of the holding member(s).

In an alternative arrangement, which may be essentially the reverse of the above arrangement, the attachment mechanism may comprise a projection with an outwardly extending profile, e.g. the cross sectional profile that increases, extends, slopes, steps or tapers outwardly as it extends away from a base of the structural component. In this case, the plurality of engagement members may be provided on the mount and may extend around behind at least part of the projection when the attachment mechanism is attached to the mount.

The attachment mechanism may be resiliently bendable. The attachment mechanism may be metallic, e.g. aluminium or an aluminium alloy, or polymeric.

The at least one receiving means for receiving the panel of the glazing system may comprise a slot or channel for receiving a peripheral edge of the panel.

The glazing system may be or comprise or be comprised in a secondary glazing system. The structural component may be a clip or a frame component of a secondary glazing system, e.g. configured to hold the secondary glazing panel of a secondary glazing system.

The structural component may comprise a removal mechanism configured to be engaged by a removal tool. The removal mechanism may comprise a slot or recess, which may be configured to receive part of the removal tool. The removal mechanism may be provided on a side of the structural component that is opposite from a side of the structural component from which the panel extends, in use. The removal mechanism may be provided in one of the first and/or second engagement members. The slot or recess may be provided with a sloping or non-perpendicular surface, which may extend away and obliquely to an adjacent portion of the side of the structural component. Engagement mechanism (e.g. the sloping or non-perpendicular surface) may be configured such the removal tool is operable to pull at least part of one of the engagement members away from the other engagement member responsive to engagement of the removal tool with the Engagement mechanism (e.g. the sloping or non-perpendicular surface).

According to a second aspect of the present disclosure is a mount for mounting a structural component of a glazing system. The mount may comprise fixing means for fixing the mount, e.g. to a frame of a glazed component, such as a window or a door or a glazing panel. The mount may comprise a mounting component for attaching a structural component, such as the structural component of the first aspect.

The mount may be configured to attach, e.g. releasably attach, with the structural component, e.g. in a snap fix, interference fit, interlocking fix arrangement or

the like. The mount may be configured to physically fix with the structural component, e.g. without relying solely on magnetic or adhesive bonding.

At least part of the mount may comprise an outwardly extending profile, e.g. the cross sectional profile that increases, extends, slopes, steps or tapers outwardly. In this case, the plurality of engagement members of the structural component may extend around and behind at least part of the outwardly extending profile when the structural component is attached to the mount.

The mount may comprise a longitudinal member. The outwardly extending profile may extend outwardly in a direction generally perpendicular to the longitudinal direction of the mount. The mount may be in the form of a longitudinal strip.

The fixing means may comprise a screw hole and optionally a screw, but the fixing means are not limited to this.

According to a third aspect of the present disclosure is an assembly comprising at least one structural component of the first aspect and at least one mount, wherein the at least one structural component is attached or configured to attach to the at least one mount.

The mount may be or comprise a mount according to the second aspect.

The structural component and the mount may be configured to attach, e.g. releasably attach, together, e.g. snap fix together. The structural component and the mount may be configured to attach, e.g. releasably attach, together, e.g. via an interlocking or interference fit. The structural component may be attached or attachable to the mount such that it can be translated along the mount in a longitudinal direction of the mount and/or the structural component, e.g. the attachment mechanisms of the structural component may be configured to slidably attach to the mount.

According to a fourth aspect of the present disclosure is a secondary glazing system comprising the assembly of the third aspect and at least one panel, such as a glass or plastic panel. The panel may be provided in a receiving means of the structural component. The structural component may be a clip or frame component of the secondary glazing system. The mount may be configured to mount to part, e.g. to a frame, of an other glazing system, such as an existing glazing system, which may be a single glazing system, e.g. using fixing means of the mount. The structural component may be attached or attachable to the mount in order to mount the at least one panel to the other glazing system, e.g. to form a secondary glazing assembly. The assembly may further comprise the removal tool.

According to a fifth aspect of the present disclosure is a method of assembling the secondary glazing system of the fourth aspect, comprising one or more of:

mounting at least one mount of the assembly to an other glazing system, e.g. to a frame of a glazing system;

providing at least one structural component of the assembly on the at least one panel;

attaching the at least one structural component of the assembly to the at least one mount of the assembly, e.g. using a snap fix attachment.

According to a sixth aspect of the present disclosure is a method of producing the structural component of the first aspect by moulding, casting, additive manufacture, 3D printing, fusion forming, machining such as CNC machining, and/or the like.

According to a seventh aspect of the present disclosure is computer readable instructions configured such that, when processed by a controller of a computer controlled manufacturing apparatus cause the apparatus to form the structural component of the first aspect. The computer controller manufacturing apparatus may be, comprise or be comprised in apparatus for moulding, casting, additive manufacturing, 3D printing, fusion forming, machining such as CNC machining, and/or the like.

It will be appreciated that features analogous to those described in relation to any of the above aspects may be individually and separably or in combination applicable to any of the other aspects.

Apparatus features analogous to, or configured to implement, those described above in relation to a method and method features analogous to the use and fabrication of those described above in relation to an apparatus are also intended to fall within the scope of the present invention.

Description of the Drawings

Embodiments of the present invention will now be described, by way of example only, with reference to the accompanying drawings, which are:

Figure 1 a cross section of a secondary glazing assembly; and

Figure 2 a cross section of an alternative secondary glazing assembly.

Detailed Description of the Drawings

Figure 1 shows a panel or glazing assembly 5 comprising a structural component 10. The panel or glazing assembly 5 is particularly but not exclusively a secondary glazing assembly. In the example, the structural component 10 is part of a frame for holding a secondary glazing panel 15. However, it will be appreciated that the principles of the present invention are equally applicable to other structural components, particularly those that support at least one panel or sheet.

The glazing assembly 5 is retrofitted or configured to be retrofit to an existing glazing system, particularly but not exclusively a single glazed glazing system.

The existing glazing system comprises an existing frame 20 mounted to a wall 25 or a building or other structure. The frame 20 may be any known construction, such as timber, PVC, or aluminium. The existing frame 20 supports an existing panel 30, such as a glass or plastic (e.g. polycarbonate) panel.

The glazing assembly 5 comprises a panel 15 (e.g. a secondary or tertiary panel, such as a glass or polymeric, e.g. polycarbonate, panel) that is supported in a frame 40 that comprises or is formed from one or more structural components 10. The structural components 10 comprise means 55 for receiving, gripping and sealing a peripheral portion of the panel 15. For example, each structural component 10 may comprise a side of a frame 40 and be bonded or joined together in order to form the frame 40, but other arrangements would be apparent.

The structural components 10 are configured to mount onto the existing frame 20 via mounting members (mounts) 60. The mounting members 60 comprise elongate strips that run at least part of the way along at least one or each side of the existing frame 20. In this example, the mounting members 60 are screwed to the existing frame 20 but other suitable mounting arrangements could be used. In particular, the structural components 10 are configured to snap fix to the mounting members 60.

The mounting members 60 comprise an outwardly extending cross sectional profile that extends outwardly in a direction perpendicular to the longitudinal direction of the mounting members (i.e. perpendicularly to the longitudinal direction of the side of the existing frame 20) as if extends away from the existing frame 20. The outwardly extending cross section may comprise an outwardly tapering cross section, a step profile, an outwardly sloping or curving profile or any other suitable profile.

The structural components 10 comprise a plurality of engagement members 65 that extend from a body 70 of the structural component that receives the panel 15. The plurality of engagement members 65 include at least first and second engagement members 65a, 65b that extend away from the body 70 to form an extending portion 72, a distal portion of which comprises a holding portion 75. The respective holding portions 75 of the first and second engagement members 65a, 65b extend towards

each other, e.g. in a sloping, stepped, tapered, or curved or other suitable profile that extends away from the respective extending portion 72 and generally towards the holding portion 75 of the other of the first or second engagement member 65a, 65b.

In this way the holding portions 75 of the first and second engagement members 65a, 65b mutually define an inwardly sloping internal profile that compliments the outwardly extending profile of the mounting member 60. The engagement members 65a, 65b are resiliently deformable such that, when the structural components 10 are pressed onto the mounting members, then the engagement members 65a, 65b bend back away from each other to accommodate the mounting member 60 therebetween, and particularly the outwardmost part of the outwardly extending profile of the mounting member 60, before resiliently snapping back towards each other as the structural components 10 are further pushed onto the mounting members 60 so that the holding portions locate in behind part of the outwardly extending profile of the mounting members 60 to thereby attach the structural components 10 to the mounting members 60 and thereby attach the frame 40 to the existing frame 20. It will be appreciated that the structural components 10 may be slidable along the mounting members 60, at least initially, which may facilitate easy positioning, aligning and registering of the panels 15 and 15, but may be fixed later.

Figure 2 shows an alternative panel or glazing assembly 5' comprising a structural component 10'. The arrangement, including the glazing assembly 5' and structural component 10' of Figure 2 are substantially the same as those of Figure 1, with common features indicated using the same reference numerals and equivalent features using the same reference numerals suffixed with an apostrophe (').

The structural component 10' differs from that of Figure 1 in that it comprises a removal mechanism 205 configured to be engaged by a removal tool 210. The removal mechanism 205 in this example is in the form of a slot or recess configured to receive part of the removal tool 210. However, the removal mechanism 2058 may instead comprise a protruding part of the like. The removal mechanism 205 is provided on a side of the structural component 10' that is opposite from a side of the structural component 10' from which the panel 15 extends in use, i.e. on an outward side of the structural component 10'. In particular, the removal mechanism 205 is provided in the second engagement member 65b'.

Beneficially, the slot or recess of the removal mechanism 205 is provided with a sloping or non-perpendicular surface 215 that extends away and obliquely to an adjacent portion of the side of the structural component 10'. In this way, the removal tool 210 is operable so that a hook part 220 of the removal tool 210 can be inserted into the slot of the removal mechanism 205 such that it catches on the surface 215 of

the removal mechanism 205, and operable to pull at least part of the second engagement member 65b' away from the first engagement member 65a by camming off the sloping or non-perpendicular surface 215.

Although various examples are described above, it will be appreciated that alternative configurations may be possible whilst keeping within the scope of at least one of the appended claims.

CLAIMS

1. A structural component for a glazing system, the structural component being configured to support a panel of the glazing system, the structural component comprising:
at least one receiving means for receiving the panel of the glazing system;
at least one attachment mechanism for attaching the structural component to a mount comprised in or provided on the glazing system; wherein
the attachment mechanism may be configured to physically fix to the mount via a snap fix, interference fit or interlocking fit.

2. The structural component of claim 1, wherein the attachment mechanism is configured to releasably attach to the mount by physically accommodating and/or interacting with the mount.

3. The structural component of any preceding claim, wherein the attachment mechanism comprises at least two or more engagement members that extend from a body of the structural component and configured to snap fix, interference fit and/or interlock with the mount.

4. The structural component of claim 3, wherein each of the engagement members comprises an extending portion and a holding member, which is configured to be located behind at least a part of the mount when the structural component is attached to the mount, wherein the extending portion extend between the body of the structural component and the holding member.

5. The structural component of claim 3, wherein the holding member comprises a tapered, reducing, or generally triangular cross sectional profile.

6. The structural component of claim 4 or claim 5, wherein the extending portions extend substantially perpendicularly from the body of the structural component.

7. The structural component of any of claims 4 to 6, wherein at least one of the engagement members is a first engagement member and at least one other of the engagement members is a second engagement member, the first and second engagement members forming an opposing pair in which the holding member of the first engagement member faces or generally extends towards

the second engagement member and the holding member of the second engagement members faces or generally extends towards the first engagement member.

8. The structural component of any of claims 4 to 7 configured such that, when attached to the mount, the attachment mechanism extends around at least part of all four sides of the mount, wherein the base of the attachment mechanism is provided on at least one side of the mount, the extending portions of the first and second attachment mechanisms extend along other sides of the mount and the holding members of the first and second attachment mechanisms extend around and/or along a further side of the mount, e.g. so that at least part of the mount is provided between at least part of the holding members and the base of the structural component.

9. The structural component of any of claims 3 to 7, wherein the engagement members are resiliently bendable.

10. The structural component according to any of claims 3 to 9, wherein the structural component comprises a removal mechanism in one or both of the first and/or second engagement members configured to be engaged by a removal tool, the removal mechanism being provided on a side or sides of the structural component that is opposite from a side of the structural component from which the panel extends, in use.

11. The structural component according to claim 10, wherein the removal mechanism comprises a slot or recess configured to receive part of the removal tool, and the slot or recess is provided with a sloping or non-perpendicular surface that extends away and obliquely to an adjacent portion of the side of the structural component.

12. A mount for mounting a structural component of a glazing system, the mount comprising:

fixing means for fixing the mount to a frame of a glazed component; and

a mounting component for releasably attaching a structural component, such as the structural component of any of claims 1 to 11 in a snap fix, interference fit, or interlocking fix.

13. The mount of claim 12, wherein at least part of the mount is elongated longitudinally and has an outwardly extending profile comprising a cross sectional profile that increases, extends, slopes, steps or tapers outwardly in a direction generally perpendicular to the longitudinal direction of the mount.

14. An assembly comprising at least one structural component according to any of claims 1 to 11 and at least one mount according to claims 12 or 13, wherein the at least one structural component is attached or configured to snap fix, interlock or interference fit to the at least one mount together.

15. The structural component may be attached or attachable to the mount such that it can be translated along the mount in a longitudinal direction of the mount and/or the structural component.

16. A secondary glazing system comprising the assembly of claim 14 or 15 and at least one panel, such as a glass or plastic panel, the panel being provided in a receiving means of the structural component.

17. A method of assembling the secondary glazing system of claim 16, comprising one or more of:

mounting at least one mount of the assembly to a glazing frame;

providing at least one structural component of the assembly on the at least one panel;

attaching the at least one structural component of the assembly to the at least one mount of the assembly using a snap fix, interlocking fit or interference fir attachment.

18. A method of producing the structural component of any of claims 1 to 11 as an integral component by moulding, casting, additive manufacture, 3D printing, fusion forming, machining such as CNC machining, and/or the like.

19. Computer readable instructions configured such that, when processed by a controller of a computer controlled manufacturing apparatus cause the apparatus to form the structural component of any of claims 1 to 11.

Amendments to the claims are as follows:

CLAIMS

1. A system comprising at least one structural component for a glazing system, at least one mount fixed or for fixing to the glazing system, and a removal tool, wherein:

the mount has an outwardly extending profile;

the structural component being configured to support a secondary glazing panel of the glazing system, the structural component comprising:

at least one receiving means for receiving the secondary glazing panel of the glazing system;

at least one attachment mechanism for attaching the structural component to the mount; wherein

the attachment mechanism is physically fixed or configured to physically fix to the mount via a snap fix, interference fit or interlocking fit and comprises at least two engagement members that extend from a body of the structural component and are configured to extend around and behind at least part of the outwardly extending profile over opposing sides of the mount so as to snap fix, interference fit and/or interlock with the mount;

the engagement members are resiliently bendable;

the structural component comprises a removal mechanism in one of the engagement members, the removal mechanism defining a slot or recess and configured to be engaged by the removal tool when the attachment mechanism is fixed to the mount, the removal mechanism being provided in a side of the structural component that is opposite to a side of the structural component from which the panel extends from the receiving means, in use; and

the slot or recess is provided with a sloping or non-perpendicular surface that extends away from and obliquely to an adjacent portion of the side of the structural component; and wherein

the removal tool comprises a hook part for engaging the sloping surface of the slot or recess.

2. The system of claim 1, wherein the attachment mechanism is configured to releasably attach to the mount by physically accommodating and/or interacting with the mount.

3. The system of claim 1 or claim 2, wherein each of the engagement members comprises an extending portion and a holding member, which is configured to be

located behind at least a part of the mount when the structural component is attached to the mount, wherein the extending portion extend between the body of the structural component and the holding member.

4. The system of any preceding claim, wherein the holding member comprises a tapered, reducing, or triangular cross sectional profile.

5. The system of claim 3 or claim 4, wherein the extending portions extend substantially perpendicularly from the body of the structural component.

6. The system of any of claims 3 to 5, wherein at least one of the engagement members is a first engagement member and at least one other of the engagement members is a second engagement member, the first and second engagement members forming an opposing pair in which the holding member of the first engagement member faces or extends towards the second engagement member and the holding member of the second engagement members faces or extends towards the first engagement member.

7. The system of any of claims 3 to 6 configured such that, when attached to the mount, the attachment mechanism extends around at least part of all four sides of the mount, wherein the base of the attachment mechanism is provided on at least one side of the mount, and the holding members of the first and second attachment mechanisms extend around and/or along a further side of the mount so that at least part of the mount is provided between at least part of the holding members and the base of the structural component.

8. The system of any preceding claim, wherein:

the mount comprises screw fixing means for screw fixing the mount to a frame of a glazed component; and a mounting component for releasably attaching the structural component in a snap fix, interference fit, or interlocking fix.

9. The system of claim 8, wherein the structural component is attached or attachable to the mount such that it can be translated along the mount in a longitudinal direction of the mount and/or the structural component.

19 02 09

10. The system of any preceding claim, wherein the at least one structural component and the mount of the system of claim 8 or 9 are comprised in a secondary glazing system and the system further comprises at least one panel, the panel being provided in a receiving means of the structural component.

19 02 09

Application No:	GB1819867.1	**Examiner:**	Miss Erin Bunton
Claims searched:	1-11, 14-19	**Date of search:**	28 March 2019

Patents Act 1977: Search Report under Section 17

Documents considered to be relevant:

Category	Relevant to claims	Identity of document and passage or figure of particular relevance
X	1-11, 14-19	WO02/29471 A1 (RESEARCH FRONTIERS INC) See figures and description, noting attachment mechanism 18
X	1-11, 14-19	GB2187782 A (WESGATE) See figures and description, noting capping strips 4 and indents 3
X	1-11, 14-19	FR2341731 A1 (THIBAULT) See figures and EPODOC and WPI (AN 1977-E8650Y) abstracts, noting button 7 and frame 3
X	1-11, 14-19	GB1031929 A (J F FINNEGAN & CO) See figures and description, noting screw 10, cavity 14 and tapered edge 17, 18a
X	1-11, 14-19	US2011/047875 A1 (KELLEY) See figures and description, noting base 400 and shim 70
X	1-3, 5-11, 14-19	US2006/037261 A1 (CALLAHAN) See figures and description, noting attachment mechanism 4
X	1-4, 6, 8-11, 14-19	US4409758 A (DICKERSON) See figures and description, noting attachment mechanisms 14, 15, 16

Categories:

X	Document indicating lack of novelty or inventive step	A	Document indicating technological background and/or state of the art.
Y	Document indicating lack of inventive step if combined with one or more other documents of same category.	P	Document published on or after the declared priority date but before the filing date of this invention.
&	Member of the same patent family	E	Patent document published on or after, but with priority date earlier than, the filing date of this application.

Field of Search:

Search of GB, EP, WO & US patent documents classified in the following areas of the UKC^{X} :

Worldwide search of patent documents classified in the following areas of the IPC

E06B

The following online and other databases have been used in the preparation of this search report

EPODOC, WPI

International Classification:

Subclass	Subgroup	Valid From
E06B	0003/28	01/01/2006