PATENT SPECIFICATION (11) 1 603 443

1 603 443

(21) Application No. 37834/80 (22) Filed 2 March 1978
(62) Divided out of No. 1603441
(31) Convention Application No. 52/022981
(32) Filed 2 March 1977 in
(33) Japan (JP)
(44) Complete Specification published 25 Nov. 1981
(51) INT CL³ G03G 21/00
(52) Index at acceptance
B6C 104 1200 1260 VA

(54) COPYING OR PRINTING APPARATUS

(71) We, CANON KABUSHIKI KAISHA, a Japanese Company of 30-2, 3-chome, Shimomaruko, Ohta-ku, Tokyo, Japan do hereby declare the invention, for which we pray that a patent may be granted to us, and the method by which it is to be performed, to be particularly described in and by the following statement:—

The present invention relates to a copying or printing apparatus.

According to the present invention there is provided a copying or printing apparatus comprising:

a plurality of operative means including processing means for performing an image forming process in which an image is formed on a recording medium;

input means for entering an input signal related to the operation of the processing means, and

control means operable to control the operation of the processing means in accordance with said input signal, said control means comprising memory means storing a program for the operational control of said processing means, and a plurality of outputs for providing control signals carrying instructions for controlling said operative means, said control means being arranged to provide on one of said outputs a plurality of distinguishable forms of control signal, each corresponding to a respective control operation for the operative means.

Apparatus according to the invention is therefore economical with regard to the use of outputs of the control means.

An embodiment of the present invention will now be described by way of example with reference to the accompanying drawings, in which:—

Brief Description of the Drawings

Fig. 1 is a cross sectional view of an example of a copier wherein the present invention is applicable;

Fig. 2 is a cross sectional view of a paper feed section thereof wherein a manually inserted cassette is utilized;

Fig. 3 is a cross sectional view an optical system and an illuminating section of the present invention;

Fig. 4 is a perspective view showing an accuride utilized as a linear guide device;

Fig. 5 is a perspective view of a drive-guide section of the optical system;

Figs. 6 and 7 are cross sectional views of the illuminating section;

Fig. 8 is a schematic drawing of a conventional linear guide device;

Fig. 9 is a cross sectional view of the paper feed section;

Fig. 10 is a perspective view thereof;

Fig. 11 is a perspective view of a clutch mechanism for controlling a paper feed device;

Fig. 12 is a perspective view thereof;

Fig. 13 is a cross sectional view of a conventional paper feed control clutch;

Fig. 14 is a perspective view of a loop forming guide plate;

Fig. 15 is an elevation view of a copy control section;

Figs. 16, 17, 18 and 19 are flow charts of sequence control;

Fig. 20 is a flow chart of key entry;

Fig. 21 is a time chart in book mode;

Figs. 22 and 23 are time charts in sheet mode;

Fig. 24 is a circuit diagram for achieving the time charts shown in Figs. 22 and 23;

Fig. 25 is a control block diagram of the present invention wherein a computer is employed;

Figs. 26(A), (B), (C) and (D) are circuit diagram, name list, pulse wave chart and a drawing of cassette change cam, respectively, corresponding to Fig. 25;

Fig. 27 is a diagram of an embodiment of the matrix circuit in Fig. 26;

Fig. 28 is an internal circuit diagram of CPU in Fig. 26;

Fig. 29 is an illustration of register addresses of the RAM in Fig. 28;

Fig. 30 is a partial flow chart of the control by CPU; and

Figs. 31-1 to 31-7 are flow charts of the control by CPU.

Description of the Preferred Embodiments

(Machine)

Referring to Fig. 1, an original 1 is placed on a glass plate of an original table 2 constituting an original supporting face on the upper surface of the machine casing, and is subjected to a slit exposure by means of an optical system consisting of an illuminating lamp 3, a first mirror 4 displacing integrally therewith, a second mirror 5 displacing in a same direction as that of said first mirror 4 with a velocity half of that of said first mirror 4, a switching mirror 6, a lens 7 and a fixed mirror 8, thereby to form an image of said original onto a drum 9.

The surface of said drum 9, which is an endless photosensitive member comprising an insulating surface layer, a photoconductive layer and a conductive base, is electrostatically charged with a charger 10, and, upon reaching the exposure section 11, is exposed to the image of the original, combined with simultaneous charge elimination by means of a charge eliminator 12.

The photosensitive drum surface is successively subjected to a flush exposure by a flush exposure lamp 13 to form an electrostatic latent image on said surface, and is introduced into a developing station 14.

The development is conducted by wet process utilizing a developing roller 15. Successively the excessive developing liquid is squeezed by a post-charger 16.

Then the image formed on said drum 9 is transferred, by means of a transfer charger 17, onto a copy sheet 20 supplied from a feed section 18 or 19.

The copy sheet, after the transfer, is separated from the drum 9 in the separating section 21, then is fixed in a fixing section 22 and ejected by means of an ejecting roller 23 onto a tray 24. On the other hand the photosensitive drum surface is cleaned by a blade 25 maintained in pressure contact with said surface to remove remaining toner on said drum, and is thus prepared for the succeeding cycle. In case of copying a bound original, the switching mirror 6 is placed in a position represented by double-dot chain lines.

An automatic feed device 26 for sheet originals can be utilized when the switching mirror 6 is placed in the full-line position and the moving mirrors 4, 5 are placed at the right end (full-line positions). In this case the original passing through the exposure section 30 is illuminated by the lamp 3, and the image of said original is formed, by means of said switching mirror 6, lens 7 and fixed mirror 8, onto the drum 9. Said lamp 3 is same as that used for the bound original. The sheet originals 28 are stacked on an original table 27 of the automatic feed device 26, and an uppermost sheet is separated by means of a separating roller 29 and conveyed, by means of a series of feed rollers 31, 32, 33 and 34, through the exposure section 30 to the original tray 35.

Automatic continuous feeding of sheet originals can be achieved by said automatic feed device 26. Also by making the transfer speed of said feed rollers 31—34 somewhat faster than that of said separating system 29, it becomes possible to provide a gap between the succeeding sheet originals whereby the detection of the leading or trailing end of each sheet original is facilitated.

Fig. 1 shows a state wherein either a main cassette 73 or a sub-cassette 74 is usable, in connection therewith an upper or a lower feed roller 53 being actuated by means of a switching button.

Fig. 2 shows a state wherein a manually inserted cassette 75 is used. A cassette receiver 80 is articulated to an axis 76 fixed on the main body.

The manually inserted cassette 75 is slidably mounted on a cassette receiver 77, of which an extremity is fixed to a shaft 79 articulated on the main body. The shaft 79 is rendered swingable by means of a motor and the position thereof is selectable by means of a button.

Also as shown in Fig. 2, there are provided paper detecting elements (a lamp

and a light-receiving element 103) in a position in the copy sheet path corresponding to the distance l between the exposure section and the transfer section. Upon detection of the trailing end of a copy sheet the optical system is reversed by a control to be explained later.

Now referring to Figs. 3 to 7 there will be given an explanation on the guiding of optical system and on the illuminating section.

The first mirror 4 is fixed on a supporting member 36 which is coupled with an inner member 37 of a linear guide known under a trade name "Accuride". The Accuride is provided, as shown in Fig. 4, with a structure of a plurality of rollers 40 retained by a retainer 39 within two linear spaces each composed of grooves respectively formed on an inner member 37 and an outer member 38, whereby said inner member 37 is guided linearly with respect to said outer member 38. Said spaces confining said rollers 40 are dimensioned slightly smaller than the outer diameter thereof to give a predetermined pressure thereto whereby a relative movement without play being realized between said inner and outer members. As shown in Fig. 5, the outer member 38 covers the stroke of said first mirror 4 and mounted to the machine frame (not shown) by means of mounting members 41. The inner member 37, being of a length substantially equal to that of mounting portion of the supporting member 36 for said first mirror, is guided over the full length of said outer member, riding switchingly on many rollers 40. On the other end of said supporting member 36 there is provided a roller 42 supported by a rail 43 fixed to the main body.

The second mirror 5 is fixed to a supporting member 44 which is in turn fixed to an inner member 37 of a downwardly fixed Accuride. A conventional linear guide system is schematically shown in Fig. 8, wherein mirror supporting members 36, 44 are linearly guided along a rod-shaped rail 45 supported on both ends thereof. Such system is unable to guide the mirrors stably and with high precision because (1) the rail 45, being only supported by the both ends thereof, is of a limited rigidity, (2) the span (l) of supporting portion particularly of the supporting member for the first mirror has to be limited in order to avoid mutual interference of supporting portions of said supporting members, and (3) a certain play is inevitable between the rod and the thrust bearing fitted thereon. In contrast thereto, the mechanism described above enables a stable reciprocating movement with an extremely high precision because (1) The Accuride can be fixed, at any portion thereof, to the main body, (2) the Accuride itself has a large dimension with an accordingly enlarged cross section, (3) the supporting span (l) can be made satisfactorily large as there is no mutual interference between the supporting portion of the Accuride and the supporting portions of supporting members for the first and second mirrors, and (4) there exists no play between the inner and outer members as explained before.

In Fig. 3 the full-lined positions are home positions from which the first and second mirrors 4, 5 are displaced to the right to perform scanning of the original, and, upon completion thereof, are returned to said home positions by means of a spring 45. In case a button for automatic feed device for sheet originals is actuated, the mirror 5 is displaced by means of a clutch motor to the chain-lined position at right and locked there as to be explained later. In this case the lamp 3 is displaced to a position allowing illumination of sheet originals. The details of related portion are shown in Figs. 6 and 7.

Fig. 6 shows a state of scanning an original placed on the glass plate of original table 2. A supporting arm 46 fixed to the mirror supporting member 36 is provided with an axis 47, on which rotatably supported is an integral structure of an illuminating lamp 3, a reflector 48 and a supporting follower 49, wherein said follower 49 being provided at an end thereof with a roller 50 to enable the function thereof as a follower. Fig. 6 shows the details in the vicinity of the first mirror 4 during the copying of a bound original, while Fig. 7 shows the details in the vicinity of the illuminating section while the automatic feed device for sheet originals is in function. Upon displacement to the right-hand end, the first and second mirrors mutually approach due to the speed difference therebetween. The supporting member 44 for the second mirror is provided with a cam plate 51, which is traced by said roller 50 to direct the lamp 3 and the reflector 48 toward the exposure section 30 of a sheet original as shown in Fig. 7.

Now there will be given a detailed description on the paper feed section while referring to Figs. 9, 10, 11 and 12. A paper feed roller 53 is fixed on an axis 54 thereof which is rotatably supported on an arm 55. Said arm 55 is provided with a fixed shaft 56 which is rotatably supported by the main frame, whereby said paper

feed roller 53 is rendered rotatable around the shaft 56. The arm 55 is further provided with a spring 57 biasing said arm upwards. The axis 54 is provided with a follower roller following a cam 59 which is controlled by a single-rotation clutch adapted to making an intermediate stop during rotation, as explained in the following with reference to Figs. 11 and 12. A cam shaft 60, passing through and supported by a frame 61, is provided with a pulley 63 which is driven by a motor through a belt 62. A spring clutch consisting of a drum portion 63, of said pulley 63, a clutch drum 64 fixed on said shaft 60, a clutch spring 65 and stop ring 66 is controlled by a solenoid 67. When the solenoid 67 is not energized, a lever 68 is located in a full-lined position in Fig. 11 to engage a projection 66_1 of said stop ring with said lever 68 thereby maintaining the clutch in disconnected position. Upon energizing of the solenoid 67 the lever 68 is displaced to a chain-lined position 68' to release the engagement with said projection 66_1 whereby the clutch is connected to cause rotation of the cam 59. However, upon rotation of ca. 180°, an another projection 66_2 becomes engaged with the lever 68' to again disconnect the clutch, whereby the paper feed roller 53 is lowered by said cam 59 to a chain-lined position 53' shown in Fig. 9.

In said lowered position a friction pulley 69 (Fig. 10) provided on one end of the paper feed roller shaft 54 comes into friction contact with a constantly driven capstan 70 (Figs. 9, 10) to drive said paper feed roller 53.

Deactivation of solenoid 67 disengages the projection 66_2 from the lever to connect again the clutch, which is again disconnected upon returning to the original full-lined position in Fig. 11 after a rotation of ca. 180°. The clutch spring 65 is engaged at one end thereof with the stop ring 66 and at the other end thereof with the clutch drum 64 to maintain relative positional relationship between the projections 66_1, 66_2 of the stop ring 66 and the cam 59 even after repeated clutch functions.

Such intermediate stop function of the cam is useful in increasing the design freedom, as the stopping can be freely selected by the period of solenoid activation.

Fig. 13 shows a conventional example of cam control mechanism for achieving such intermediate stop, wherein (66) is a stop ring, (66_1) and (66_2) are recesses for stopping said stop ring, and (b) and (c) are levers provided rotatable around a shaft (d) to engage with said recesses. A lever (a) with a pin (a') is rotated by a solenoid (67) around said shaft (d) to control said levers (b) and (c). Though a detailed explanation of the functions of such conventional system is omitted herein, the mechanism of the present invention is apparently simpler than such conventional system, and is therefore cheaper and more reliable. In contrast, the conventional system is inevitably of a lower reliability and of a higher cost due to the accumulated precisions (allowances) of component parts and to complex mutual movements of the component parts.

Now referring to Fig. 9, a paper sheet ejected from a cassette 73, 74 or 75 is advanced as indicated by double-dotted chain line P by the direction of ejection, rigidity and weight of paper, thus coming into contact with register rollers 52 which are in stopped state to form a loop P', and is further advanced upon start of rotation of said rollers 52. Such conventional paper feed mechanism often fails to form a desired loop P' but results in paper jamming between the cassette 75 and a guide plate 71 resulting from formation of an inverted loop P''. This is found out due to insufficient air supply between the paper and the guide plate 71 when the paper sheet is to be displaced from the state P to P' whereby the paper remains being pressed in the position P.

In order to prevent such trouble, therefore, the guide plate 71 and the lower guide plate 72 are respectively provided with plural openings 71_1, 72_1 for air supply as shown in Fig. 14. Said openings may be provided on either one of said guide plate. Though in the embodiment illustrated in Fig. 14 there are provided oblong openings in spreading arrangements toward the downstream in order to avoid engagement with paper sheet, a similar effect can also be obtained by providing plural circular openings.

(Control)

Now there will be given an explanation of a process control for the machine. This control is featured in that a high-speed continuous copying is rendered possible by controlling the functions of original feeding and other process means by the position of a transfer sheet after the start of feeding thereof, regardless of the size of said transfer sheet; further in that the process timing can be maintained unchanged through a process control achieved by reading a memory storing

programmed process timing for book mode and sheet mode even when a mode is instructed after the process is started with an another mode; further in that a limited number of output lines is effectively utilized in program control by counting the signals from load control signal lines and controlling the functions of plural loads; and further in that a limited number of input signal lines is effectively used to reduce the power consumption by combining the input means of instructing copy number and detecting copy state with the output signal lines of program control.

(Operation Input Section)

Fig. 15 shows a control for controlling the copier of the present invention. 120 is a display section for indicating the paper size in the cassette, 121 are display elements for indicating a selected cassette, 122 is a switch for selecting a manually inserted cassette, 123 is a switch for selecting the upper cassette, 124 is a switch for selecting the lower cassette, wherein said switches being retaining switches, each of which, upon actuation, turns off other switches. 125 are display elements for indicating the preset copy number and the number of copies made, 126 are ten keys for presetting the copy number, 127 is a clear key for correcting the preset copy number, 128W, 128P, 128L and 128J are display elements for respectively indicating Waiting, Paper lacking, Liquid lacking and Jammed paper, 129 is a stop button for temporarily interrupting the copying, 130 is a start button for book copy, and 131 is a start button for automatic feeding of sheet originals.

(Computer Control)

In the following there will be given an explanation of an embodiment for performing the sequence and other controls of the above-mentioned copier by means of a microcomputer.

Now referring to Fig. 25 illustrating a block diagram of a circuitry therefor, 201 is a computer chip element, 202 is a matrix circuit for supplying input signals to said element 201, 203 is a means for detecting the state of the copier, 204 is a gate circuit for output signals from the computer, 205 is a driver circuit for driving the function elements, 208 is an oscillator assisting said drive, 206 is a decoder for performing displays by the signals from the computer, and 207 is a display means.

Now referring to Fig. 26 showing the details of the circuits in Fig. 25, the microcomputer chip 201, composed of an element TMS 1000 manufactured by Texas Instruments, is provided with four data input terminals K1, K2, K4 and K8, output terminals $\theta 1$—$\theta 4$ as the output 1 and output terminals R0—R12 as the output 2. The output 1 terminals are used for indicating the copy number on the display elements D1 and D2, and connected thereto through a segment decoder. The output 2 terminals are utilized for function control of load elements and scanning of input matrix circuit.

(Peripheral Circuits)

The aforementioned gate circuit is provided with so-called decoder function, by combining the signals from said output 2 terminals to obtain further diversified output signals.

Three display lamps for Feed Missing Display and for two Jam Displays are controlled by a single output terminal R10, but there is provided a counter for counting the clock signals for display from said terminal R10 to drive different lamps.

The gate circuit supplies the output signals from the CPU to the input matrix circuit and the output interface circuit.

Said interface circuit amplifies the signals from said gate circuit to drive solenoids and lamps. The AD loads are driven through triacs of which trigger signals are obtained as AND outputs with the output from the oscillator.

In the matrix circuit, the output signals from the output 2 terminals and from the gate circuit are utilized for scanning input for the matrix circuit. These scanning lines cross with the input lines to the microprocessor to constitute a matrix, and there are provided switches at the crossing points thereof coresponding to the input points (Fig. 27).

Thus, supposing that the numbers of scanning lines and microprocessor input lines are x and y respectively, the maximum possible number of switches is xy.

Said switches are composed of keyboard switches in the control section, microswitches for control signals, and other signal generating switches in various detection circuits (for example for detecting paper, for detecting master clocks

etc). Thus the input to the microprocessor (CPU) is performed upon release of an output signal of level 1 to the scanning lines.

Now the functions of the above-described circuit will be briefly explained in the following. The key input signals from the control section (signals from numeral ten keys, clear key, start keys) and from the jam reset switch are taken into the CPU upon receipt of the output terminal R0—R2 and R9 thereof and of a signal (signal indicating before start) from terminal R4 inverted by a gate 265. Said scanning signals are clock signal shown in Fig. 26(C). The 2-digit number thus taken into the CPU is stored in a RAM, and is displayed on the display elements D1, D2 by driving said elements alternately through the switching elements 266, 267 by alternate outputs from the terminals R11 and R12 and by selecting the necessary segments of said elements by the simultaneous 4-bit output from the terminals $\theta 1$—$\theta 4$. Upon completion of preparatory step such as key entry, the signal from the terminal R4 starts the main motor and performs the pre-exposure. Also said signal from R4 designates the input switches in the matrix (for register signal RS generation, clock pulse CP generation and transfer paper discharge signal CPOS generation), thus enabling input of sequence timing signals when the drum is rotated by the main motor. Also the copy paper input signal CPIS and the stop signal STOP are supplied to the CPU utilizing the exposure lamp drive signal R6 and blank lamp drive signal R7. Under the condition that the drum is rotated, the primary charger, AC discharger, whole surface (flush) exposure lamp, paper feed plunger and register clutch are driven by the output signals from R0—R2. However said input instructions are blocked by the inverted signal of the R4 output signal. An output signal OS1 of a sheet original first detector 106 is supplied to the CPU upon receipt of an inverted output by a gate 268 of the paper feed plunger drive signal from R1 and of the sheet clutch drive signal from R1. Also the input into the CPU of a detection OS2 from a second detector 107 is achieved upon receipt of an AND output from a gate 270 receiving the register clutch drive signal from R2 and the transfer paper input signal. In this manner the input and output terminals of a limited number of a CPU can be effectively utilized. Also overlapped inputs can be prevented even if set signals from different output terminals are simultaneously supplied to the input matrix.

The optical system displacing motor is actuated by an AND output from a gate 271 receiving the output signals from the terminals R9 and R5. This will be later explained in detail in connection with the optical system position check in sheet mode.

The input signals relating to cassettes are supplied to the CPU by the set signal from the output terminal R3. The cassette selection signal and the cassette position detection signal are inputted by a short pulse from R3, and in case the manual cassette is selected (auxiliary cassette selection button AUX is ON), if the auxiliary cassette position detecting switch ACS is not ON, the set signal from R3 is continued until the switch ACS becomes ON whereby the cassette motor is switched on. Said motor does not start upon receipt of the initial set pulse.

The optical system home position detection signal OHP2 in sheet mode is inputted by the set signal from the output terminal R9. Upon identification of ON state thereof, the output terminals R5 and R9 are not set, and the optical system displacing motor is therefore not started. On the other hand, upon identification of OFF state thereof, the terminals R5 and R9 release set signals to activate the optical system displacing motor and the forward clutch to displace the optical system in a determined direction, and upon reaching ON state of aforementioned detection signal the output signal from R5 is reset to terminate the functions of the motor and clutch.

While the terminals R0—R2 and R9 release successive clock signals in case of key entry, namely prior to the start of copying, the output signals for controlling the various loads after the start of copying cycle are of a length required to switch off said loads.

If the transfer paper input signal CPIS is not detected upon release of set signal from R6, the terminal R10 releases a single pulse signal to give a Feed Missing Display. Also if the transfer paper is jammed and cannot be ejected (CPOS signal not detected upon R4 set signal), the terminal R10 releases two pulse signals to perform a Transfer Paper Jam Display. Furthermore if the sheet original is jammed so that the second detector OS2 is not actuated, the terminal R10 releases three pulses to perform a Sheet Original Jam Display. For this purpose there is provided a counter 272 of which output terminals 1, 2 and 3 release display drive signals,

which are reset by a drum rotation stop signal $\overline{R4}$ and a delayed signal after the power switch-on, namely by the start of drum rotation or by the power switch-on.

A condenser of 47 μF connected to the CPU constitutes a CPU reset circuit when the power is switched on.

Now the interior of the computer chip element will be explained in the following, while making reference to Fig. 28. ROM is a read-only memory storing the master program for performing the sequence of the copier in predetermined order in the addresses thereof, and allowing the contents thereof by designating the addresses thereof. In said ROM the programs (key entry program, equipment function program, machine ending program etc.) in binary codes are stored from an address 0 to a necessary final address.

RAM is a random access memory for storing the copy number and the control signal temporarily during the copying process.

KI is an input section for receiving external signals. ID is an instruction decoder for decoding the code signals from the ROM and dividing said code signals into finer control signals α for conducting each step.

ALU is an arithmetic logic unit for data processing, and Acc is an accumulator for storing the input and output data and the result of logic processing. R0 is register with a latch function, of which content is utilized as control output signals.

The CPU and the peripheral circuits explained above perform the key entry flow, process sequence flows in book and sheet modes, finishing mode flow etc. shown in Figs. 16—20, according to the detailed flow chart by instruction codes shown in Fig. 31 and program code lists shown in Tabs. 1 and 2.

The ROM in CPU stores the above-mentioned lists in binary codes and in the order of steps, said codes being read at an extremely high speed (for example 10 μsec for each step in the flow shown in Fig. 31) to perform the above-mentioned flows.

For simplicity the power supplies to the CPU and the peripheral circuits and the clock pulse source for driving the CPU are omitted from the foregoing explanation.

(Key Entry Cycle)

Fig. 20 shows the interaction between the RAM and keys in the key entry flow.

Upon power on, all the outputs of microprocessor are cleared, and the content of RAM is cleared. Then a data "1" is stored in the location (0, 1) of the RAM (hereinafter called location 1) and the flow proceeds to the key entry cycle.

The key entry is performed by means of numeral keys 126, a Clear key 127 for copy number correction, a book mode copy start key 130, a sheet mode copy start key 131 and stop keys 129 for stop instructions.

The copy number can be selected with two digits up to 99, of which first order and second order are stored respectively in the RAM location 1 and location 2. If no key is depressed a number "01" is displayed due to the content RAM location 1 previously set as explained above, thus always allowing single copying without actuating the numeral keys. If two or more copies are needed to the numeral keys are depressed accordingly. Upon actuation of any key, an identification step is conducted to identify if said key is a numeral key or an other key, and, if identified as a numeral key, the flow stores the input numeral into the RAM location 1 with corresponding display and awaits the next key actuation.

If it is identified as the clear key, the data in RAM locations 1 and 2 are cleared, and the flow stores again "1" in the RAM location 1 and awaits the next key actuation. The flow proceeds to the succeeding cassette change step upon depression of a copy start key. Then an identification is performed to identify if a stop signal is released, and, if yes, the program again awaits the next key actuation. If no, the program proceeds to the copy sequence.

The stop signal is released if the transfer sheet or the developer is lacking or when the fixing heater has not reached a predetermined temperature.

If numeral keys are actuated twice in succession, the data in the RAM location 1 is transferred to the location 2, and the second data is stored in the RAM location 1. For example in case of 72 copies, the data storage is conducted as shown in Fig. 29.

Upon succeeding actuation of any keys other than numeral keys the program performs the functions in same manners as explained before.

When the program has passed the key entry program and entered the copy sequence, the keys no longer provide input data even if depressed, thereby preventing erraneous functions.

(Process Sequence)

Figs. 16—18 show sequence control flow charts from power put-on to the end of copying in the copier and Figs. 19 and 20 are time charts indicating the function timings of process means.

The timing signals for performing the process after the power on and the copy instruction by the foregoing key entry cycle are formed based on the clock signals CP of 1 pulse per 1 mm of process speed (drum rotation speed 100 mm/sec).

After the main switch is turned on, the copy sequence is not initiated for a waiting time during which the fixing heater is energized and reaches a predetermined temperature.

After the lapse of said waiting time, the copy sequence is rendered possible if the transfer sheet and the toner are properly provided.

(Cassette Change)

There are provided three cassettes, of which the upper and lower cassettes accommodate the standard sizes of higher frequency of use to enable copying of two sizes without manual cassette exchange. Also there is provided a manually inserted (auxiliary) cassette for enabling use of a transfer paper of a non-standard size.

These three cassettes can be selected by the button switches 122, 123 and 124.

As both the upper cassette and the auxiliary cassette utilize the same paper feed device, either cassette not in use is to be placed so as not to the paper feed from the other cassette. This state is detected by a microswitch 100 functioning in connection with the cassette displacing mechanism. Said mechanism is driven by a motor 108 which is controlled by said microswitch.

Namely upon selection of the auxiliary cassette, the presence thereof in the determined position is detected by the ON state of the switch 100 (ACS), but in case of OFF state thereof the cassette motor connected with a cam 101 is rotated to expel the upper cassette toward the outside and set the auxiliary cassette to the determined paper feed position until said switch becomes ON. On the other hand when the upper cassette is selected, the motor is rotated until the point b reaches the switch 100 to retract the auxiliary cassette and set the upper cassette instead.

In Fig. 2, 150 and 151 respectively indicate a lamp and a light-receiving element for detecting transfer paper in each cassette.

(Book Mode)

Now the process sequence in the book mode copying will be explained with reference to the flow chart in Fig. 16 and the time chart in Fig. 21.

The copy sequence is initiated by depressing the copy button 130. At first a drum drive motor 112 is switched on to initiate the rotation of photosensitive drum, and simultaneously initiated is the counting of clock pulses CL as well as the preliminary charging and exposure to reduce the potential unevenness on the photosensitive drum, by means of the output signals from R4 and R9. Upon counting 300 pulses, the output signals from R0 and R7 turn, on the primary charger 10, AC discharger 12, flush exposure lamp 13, liquid squeeze charger 16, transfer charger 17 and blank exposure lamp 102. Upon further counting of 120 clock pulses, the optical system displacing clutch 109 is turned on by the output signal from R5 to advance the optical system from the home position. Further a register clutch 110 is turned on by the output signal of R2 to cause the rotation of register roller 52. Upon further counting of 6 clock pulses a paper feed plunger 113 is energized by the output signal of R1 to lower the constantly driven paper feed roller 53 to advance the transfer paper from the cassette 73, 74 or 75. Also the original illuminating lamp 3 is lighted by the output signal of R6 and starts displacement with the optical system 4, 5 while illuminating the surface of an original. Also the blank exposure lamp 102 is turned off.

Upon counting of 60 pulses after the paper feed, the detector 103 performs the detection of paper 20, and, if not detected, the program proceeds to the routine F whereby the terminal R10 releases a single pulse to give a feed missing display.

In such case all the drive systems are turned off except the heater control and the feed drive motor 111 which are maintained in function. In case the upper 74 or the lower cassette 73 is utilized, the program proceeds to the routine G, and the copying sequence is restarted by depressing the start button after removing the transfer paper incorrectly fed. In case of the auxiliary cassette 75, the feed missing display indicates the absence of paper therein as this cassette is not provided with means for detecting the remaining amount of paper therein. In this case the

cassette motor 108 is started to expel the auxiliary cassette to the outside to a determined position at which the microswitch 100 is turned off to terminate the function of the cassette motor 108. By again depressing the start button after inserting the transfer sheets into the cassette, the cassette motor is activated to guide the cassette into the machine, and upon reaching a determined position the microswitch 100 is actuated as shown in Fig. 26(D) to release a signal, which terminates the function of the cassette motor and starts the copy sequence.

If the transfer sheet arrives within afore-mentioned counting of 50 clock pulses, and upon further counting of 50 clock pulses from said arrival, the register clutch 110 is disconnected to stop the rotation of the register rollers 52 whereby the leading end of the transfer paper collides with said rollers to temporarily stop the advancement thereof. Thereafter a register signal RS released by a switch 116 upon passing of the optical system through a determined position connects the register clutch to start the rotation of said register rollers, thereby causing the advancement of transfer paper through said rollers toward the drum. Said register signal is released at a timing in such a manner that the leading end of the image formed on the drum coincides with the leading end of said transfer paper.

Upon receipt of the register signal, the paper feed plunger 113 is deactivated to terminate the paper feed function of the paper feed roller.

Upon passing of the transfer paper through the detector 103, the exposure lamp 3 and the optical system displacing clutch 109 are both turned off, whereby the optical system is made free and returned to the home position by means of the spring. During said reversing displacement of the optical system, there is lighted the blank exposure lamp 102. Also the preset copy number is reduced by one. If after a jam reset operation which is to be explained later, this subtraction does not take place in order to compensate the loss of jammed copy.

The program checks the remaining copy number, and, if 0, proceeds to the finishing mode (routine D). If it is not 0, the copying sequence further proceeds. Also the program proceeds to the finishing mode if there is released, at this point, a copy stop signal (by depression of the stop button or by the lack of transfer paper or toner).

In the absence of said stop signal, upon receipt of the register signal RS released at the reversing of the optical system, there is conducted a counting of 124 clock pulses, of which period is selected slightly longer than the time from the signal release of register signal generator to the return of optical system to the home position. Upon completion of counting of 124 pulses, the optical system is ready to start from the home position for starting the succeeding copying cycle.

As the developing device is functioned in synchronization with the main motor, the photosensitive drum is rotated upon counting 300 clock pulses after the end of copying whereby the surface thereof is cleaned with the developer and the blade 25.

(Sheet Mode)

In the following there will be explained the sequence control in sheet mode while making reference to the time charts in Figs. 22 and 23 and to the flow chart in Fig. 17.

The optical system to be used is same as that used in the book mode. Thus the optical system, if placed in a position for the book mode, is displaced to the position determined for the sheet mode by depressing the sheet start button 131. The optical system advanced by the displacing motor therefor and the forward clutch is stopped upon actuating a microswitch 104 (OHP2), and simultaneously the exposure lamp 3 is deflected to a direction shown in Fig. 1 adapted for the sheet copying.

Successively, in a similar manner as in the book mode, there is conducted the selection of a cassette followed by the turning on of the drum motor, preliminary exposure lamp, preliminary charger, primary charger, AC discharger, transfer charger, whole surface (flush) exposure lamp and blank exposure lamp, and thereafter the sheet mode sequence (routine C) is started upon counting of 120 clock pulses.

Upon completion of counting of said 120 pulses, the sheet clutch is energized to start the rotation of feed roller 29, by which the stacked sheet originals are conveyed, sheet by sheet, from the tray 27. At the same time the register clutch is also connected. Upon counting of 100 clock pulses after the leading end of an original by the first original detector 106 (OS1 on), the paper feed plunger 113 is energized to supply the transfer paper from the cassette and to light the original

exposure lamp 3, while extinguishing the blank exposure lamp 102. In this manner the image exposure is conducted while the original is transferred, thereby performing the latent image forming process. Also upon counting of 50 clock pulses after the start of paper feeding there is identified if the transfer paper has reached the detector 103, thus to judge the presence of error in paper feeding in a same manner as explained before. Upon identification of correct arrival of the transfer paper there is further identified if the leading end of an original reaches the second detector 107 within further 60 clock pulse counting. In case of absence of the arrival of the original (OS2 off), the program, judging that the original is jammed on the way, interrupts the copying sequence and releases three pulses from the terminal R10 to perform the original jam display.

The copy cycle of sheet mode can be restarted by depressing the sheet start button again after the jammed original is eliminated.

If the second detector 107 detects the original within said 60 clock pulses, there is further conducted a counting of 50 clock pulses from said detection, upon completion of which the register clutch is disconnected to stop the rotation of register rollers 52, whereby the advancement of the transfer paper is interruped. Upon further counting of 50 clock pulses the register clutch is connected to start the advancement of the transfer paper thereby keeping the leading ends of said paper and of developed image on the drum in register. The paper feed plunger is deactivated as the transfer paper is pinched between the register rollers.

The counter for counting the original number is increased by one when an original has passed through the first detector 106.

This result is stored in the above-mentioned location of the RAM (Fig. 29) and is displayed in succession from 01 on the above-mentioned copy number display device 125. It is to be noted that the copy number setting and the corresponding display by the numeral keys are forbidden in the sheet mode operation.

Thereafter the program checks if the copying cycle is to be continued or to be temporarily interrupted (due to the absence of transfer paper or toner, or by the actuation of stop button). If the stop instruction is given, the program extinguishes the exposure lamp 3 and turns on the blank exposure lamp when the transfer paper has passed the detector 103 and proceeds to the finishing mode (Fig. 18).

Even in case the copying is to be continued, if a next original does not reach the first detector 106 within 50 clock pulses after the passing of the preceding original through the first detector, the program turns off the exposure lamp and turns on the blank exposure lamp upon completion of passing of the transfer paper and proceeds to the finishing mode.

If a next original arrives at the first detector 106 within the above-mentioned 50 clock pulses, there are further counted 50 clock pulses (i.e. 100 pulses in total) whereupon the program waits the passing of the transfer paper. If the transfer paper is still in transfer, the next original cannot be advanced as the next transfer paper cannot be fed. In such case, therefore, the sheet clutch is disconnected to temporarily stop the transfer of original (cf. time chart in Fig. 22). Upon completion of the passing of the transfer paper, the sheet clutch is immediately connected to restart the advancement of original, and simultaneously the paper feed plunger 113 is energized to feed the next transfer paper. Thereafter continued are the sequences of exposure, transfer and finishing in the above-mentioned manner.

On the other hand, in case of a short-sized transfer paper of which passing can be detected within 100 clock pulses after passing the first detector, the program follows the time chart shown in Fig. 23. In this case the sheet clutch is not disconnected but maintained in function to continue the original feeding and exposure, and the transfer paper is fed at the 100th pulse.

The sequence control thereafter is conducted in the above-mentioned manner.

As explained in the foregoing, the control of start of original exposure by detecting the trailing end of the transfer paper renders possible a high-speed continuous copying regardless of the size of the original and of the transfer paper.

The detection signals from the detectors 106, 107 and 103 are respectively called S1, S2 and S3.

An another example of sheet mode control according to the size as mentioned above can be realized by the circuit shown in Fig. 24, wherein COPY is a copy button, DISC is a high voltage source, M is a drum motor, Blank is a blank exposure lamp, S . CL is a sheet clutch, R . CL is a register clutch, LAMP1 is an exposure lamp, PL is a paper feed plunger, CUP is determined copy number completion signal, S1' is the second or thereafter of the signal S1, COUT is a

counter for counting the signal S1, CUT1—5 are counters for counting clock pulses CL and adapted for generating a pulse upon counting clock pulses of a determined number, wherein CUT5 releasing a step signal upon counting clock pulses of a determined number and being reset by the input of said signal to the terminal R; $\overline{S1}$ and $\overline{S3}$ are inverted signals of the signals S1 and S3, G1—G3 are AND gates and G9—G12 are OR gates; and the operation elements (motor etc.) are on-off controlled by the output signals (M etc.) released in the above-mentioned circuit.

The function of said circuit follows the aforementioned timing chart and will not be explained in detail.

Now there will be given an explanation on the function of the CPU in, as an example, the control for optical system displacement as a preparation for scanning directly prior to performing the sheet mode sequence, while making reference to a part of the above-mentioned detailed flow chart.

In the sheet mode operation the optical system, as explained before, has to be located in a position exclusively designed for this mode. If not located in such position, the optical system is displaced by the rotation of the displacing motor therefor and the actuation of the forward clutch, the position detection switch 104 is actuated upon arrival of the optical system at the stop position. Upon detection of actuation of said switch, the displacing motor and the forward clutch are immediately disconnected whereby the optical system stops at a position exclusive for the sheet mode.

The above-mentioned sequence will be further explained with reference to the program steps shown in Fig. 30(A) and (B).

The ROM releases a control signal (code) for each step by the clock pulses for driving the CPU. The output signals thus obtained are decoded by the instruction decoder ID to perform the program in succession. At first, upon output of a control code from a RAM location corresponding to the step 1, the decoder ID decodes this control code, and a numeral 9 is stored in the register YR through ALU by the control signal 2, to ALU and YR. In the step 2 a register R9, designated by said register YR among the registers R0, is set. In the step 3 the input data in the key input section KI is stored through ALU into the accumulator Acc. As the output of register R9 is released at the step 1, the input of the optical system home position detecting switch OHP2 is selected and it is identified if said switch OHP2 is open or closed (cf. matrix circuit in Fig. 26). Thus an input signal "0" or "1" of K4 in the key input section KI is stored in the accumulator Acc as a code of which second bit corresponds to the K4. Then in the step 4 a numeral "0" is set in the register YR through ALU.

In the step 5 the data stored in the accumulator Acc in the step 3 is transferred and stored in the location (0, 0) of the memory RAM designated by the register YR. In the step 6 it is identified if the second bit of the data in said memory location (0, 0) is "1" or not. If the data is "1" (yes) signifying that the optical system is identified to be in the position for sheet mode, the next step 7 is conducted. On the other hand if the data is "0" (no) signifying the failure of identification, the step 7 is skipped and the next step 8 for displacing the optical system is conducted. In the step 8 a numeral "5" is set in the register YR. In the step 9 the register R5 which is designated by said register YR among the registers R0, is set, and the output thereof is supplied to the driver to switch on the forward clutch. Thus, in combination with the above-mentioned output of the register R9, the optical system starts to displace toward the position for sheet mode (cf. Fig. 26). The step 10 is a jump instruction with a label LB1 to return to the step 1, and this loop function is repeated until the detecting switch OHP2 becomes actuated. When the OHP2 is actuated upon arrival of the optical system at the position for sheet mode, the second bit of the input data becomes "1" whereupon conducted is the step 7 which is a jump instruction to a label LB2. Thus successively performed is the step 11 designated by LB2. The step 11 stores a numeral "9" in the register YR, and the next step 12 resets the register R9 which is selected, among the registers R0, by said register YR. Similarly the register R5 is reset in the steps 14 and 15. In this manner the outputs of registers R9 and R5 are reset to switch off the displacing motor and the forward clutch, whereby the optical system is stopped at the position for sheet mode.

The register addresses of the RAM are schematically shown in Fig. 29.

The location (0, 0) corresponds to the position of memory in the step 5 in Fig. 30 explained above. This location is utilized as a test bit for identifying the input signals. The addresses 5 and 6 are utilized as registers for storing "1" by the flag instructions and used as routine identifying means in other flow steps in Fig. 31.

Also in Fig. 29 there are shown registers for storing the input copy number in the key entry cycle (addresses 3 and 4), for storing the finished copy number in the sequence flow cycle (addresses 1 and 2), for storing clock pulse number to be counted for jam identification (addresses 9—11) and for storing clock pulse numbers to be counted for load control timing (addresses 7 and 8).

In the operational sequence disclosed herein the preset copy number on the counter is reduced by one at each copy completion but the copying of same number can be repeated by simply depressing the start button since the preset copy number is still memorized in the memory addresses 3 and 4.

The stop flag, entry flag etc. are stored in a same bit area because they have different timings, thus economizing the registers.

The flags employed in Figs. 29 and 31 are as follows:

display flag: set for driving display unit D1
stop flag: set when temporary stop, no paper etc.
entry flag 1: set after key entry
entry flag 2: set after entry "1"
jam flag 1: set when paper is jammed
jam flag 2: set when pulse count for jam identification reaches a preset number
clear flag: set when clear key is actuated
sheet mode flag: set when sheet mode is selected auxiliary cassette flag: set when auxiliary cassette is selected
pulse flag 1: set when the pulse count does not reach a preset number
pulse flag 2: set when the pulse number for jam identification is preset.

The functions of CPU in the key entry, sequence control and finishing flow are detailedly shown also in the flow charts of Fig. 31.

(Jam Detection)

If the transfer paper reaches the outlet within a determined period after the feeding thereof from the register rollers 52 is checked by identification of paper arrival at the outlet after counting a determined number of clock pulses CP released in response to the drum rotation. The paper arrival is detected by the microswitch 117 which thereupon releases the transfer paper discharge signal CPOS. The counting of clock pulses is started from the timing of release of transfer paper from the register rollers 52. The CPU, performing very fast functions, is capable of achieving various controls between two clock pulses. Thus the clock pulse counting for jam detection can be performed without affecting the controls on various elements by incorporating a clock counting program for jam detection into the main flow while waiting various input signals or counting clock pulses for control timing. Stated otherwise different pulse countings can be conducted at the same time.

More specifically there is provided a flow (Fig. 19 I_1—I_2) for setting "300" in the RAM locations 9—11 after the second turning on of the register clutch shown in Fig. 16, and also there is provided a jam detection flow I_2—I_3 for identifying the 300 pulses within the timing identification loop for load function for example the CP1 count step or register signal identification loop step.

If the paper does not reach the detector 117 upon jam detection check, all the drives (particularly those of higher danger such as high-voltage source, heater etc.) are cut off to interrupt the copying operation, and the transfer paper jam display lamp is lighted. The paper conveyor belt is maintained in function to allow paper ejection. The optical system may be an obstacle in removing the paper jammed in the machine. For this reason upon detection of paper jamming the output terminals R9 and R5 are set to drive the optical system displacing motor 114 thereby displacing the optical system to the position for sheet mode. Upon reaching the determined position the optical system actuates the microswitch 104 to release the signal OHP2 thereby turning off the signal R5 to cut off said displacing motor. In this case the optical system is mechanically locked and is therefore not reversed. The output signal from R9 is still maintained.

Opening and reclosing of the upper cover for jammed paper removal actuates a microswitch 105 (Fig. 3), to release a signal for resetting the jam detection, the input of said signal being performed by the output R9 shown in Fig. 26(A).

Upon repressing thereafter of the start button the output R9 is terminated to actuate a plunger 115 for releasing the optical system which thus is released from

the locking and is reversed to the home position for book mode by means of a spring.

It is also possible to displace the charger 17 and roller 21 upon jam detection in order to facilitate jammed paper elimination.

The above-mentioned clock pulses are generated, by means of an internal generator, at a rate of 1 pulse/mm of process speed.

Said clock pulses can be generated, for example, by optically detecting the holes provided on a rotor plate rotating with the rotation speed of the drum.

Although the conventional discrete control circuit has to be provided with a key entry prohibition circuit to prohibit key entires during the copying operation, the control system of the present invention is free from erraneous operation even when, for example, the start button for sheet mode is depressed during the copying operation in book mode since the sequential control by microprogramming does not accept the key entries once the copy cycle is started after the proper key entries. Such technology utilizing stored program is also applicable to the copiers of various copying modes such as A4/A3 sizes, one-side and two-side copying, reduced size and same size copying.

As to the terms used in Fig. 31 and Tab. 1, reference should be made to the TMS 1000 Series, "Programmer's Reference Manual" published by Texas Instruments.

TABLE 1

Program Step
General Assembler
Assemble of TMS1000 New Instruction For B . B

STMT	SOURCE	STATEMENT
1	OPT	LIST, XREF, PROM, STAT
2	TNI06	SEQUENCE PROGRAMME
3	PAGE	0
4 LB9	ALEC	1
5	BR	LB314
6	ALEC	2
7	BR	LB14
8	ALEC	4
9	BR	LB15
10	TCMIY	3
11	BR	LB16
12 LB314	BL	LB315
13LB13	TCMIY	0
14	BR	LB16
15 LB14	TCMIY	1
16	BR	LB16
17 LB15	TCMIY	2
18	BR	LB16
19 LB10	TCY	0
20	ALEC	1
21	BR	LB17
22	ALEC	2
23	BR	LB18
24	ALEC	4
25	BR	LB19
26	TCMIY	7
27	BR	LB16
28 LB17	TCMIY	4
29	BR	LB16
30 LB18	TCMIY	5
31	BR	LB16
32 LB19	TCMIY	6
33	BR	LB16
34 LB11	TCY	0
35	ALEC	1
36	BR	LB20
37	TCMIY	9
38	BR	LB16
39 LB20	TCMIY	8

TABLE I (contd.)

	40		BR	LB16
	41	LB12	ALEC	1
	42		BR	LB21
5	43		ALEC	2
	44		BR	LB22
	45		TCY	0
	46		TCMIY	0
	47		TCMIY	0
10	48		TCY	5
	49		SBIT	3
	50		BR	LB16
	51	LB22	TCY	6
	52		SBIT	0
15	53	LB21	TCY	7
	54		SETR	
	55		KNEZ	
	56		BR	LB23
	57		RSTR	
20	58		BL	LBSQ
	59	LB23	RSTR	
	60		BL	LB24
	61	LB16	TCY	5
	62		LDP	1
25	63		BR	0
	64		PAGE	1
	65		TBITI	1
	66		BR	LB25
	67		TBITI	2
30	68		BR	LB26
	69	LB27	TCY	1
	70		TMA	
	71		IYC	
	72		TAM	
35	73		TCY	4
	74		TAM	
	75		TCY	0
	76		TMA	
	77		IYC	
40	78		TAM	
	79		TCY	3
	80		TAM	
	81		TCY	5
	82		SRIT	1
45	83	LB24	CALL	SUBA
	84		CALL	SUBB
	85		CALL	SUBA
	86		CALL	SUBB
	87		TCY	5
50	88		TBITI	3
	89		BR	LB28
	90	LB25	TBITI	3
	91		BR	LB309
	92		BL	LB4
55	93	LB309	BL	LB3
	94	LB28	BL	LB3
	95	LB26	RBIT	2
	96		TCY	1
	97		TCMIY	0
60	98		BR	LB27
	99	LBSQ	CALL	SUBA
	100		TCY	6
	101		TBITI	0
	102		BR	LB36
65	103		LDP	2

TABLE 1 (contd.)

```
104          BR      0
105 LB36     BL      LBSMI
106          PAGE    2
107 LB37     CALL    SUBA
108          TCY     3
109          CALL    SUBC
110          TBITI   3
111          BR      LB30
112 LB31     TCY     3
113          CALL    SUBE
114          TBITI   1
115          BR      LB32
116          TBITI   2
117          BR      LB33
118          TBITI   0
119          BR      LB33
120          TCY     3
121          RSTR
122          BR      LB37
123 LB32     CALL    SUBA
124          BR      LB31
125 LB30     TCY     6
126          SBIT    1
127 LB34     TCY     3
128          CALL    SUBE
129          TBITI   1
130          BR      LB33
131          CALL    SUBA
132          BR      LB34
133 LB33     TCY     3
134          RSTR
135          TCY     4
136          SETR
137          TCY     7
138          TCMIY   6F
139          TCMIY   6F
140 LB38     CALL    SUBD
141          TCY     6
142          TBITI   3
143          BR      LB39
144          TCY     7
145          TCMIY   6D
146          TCMIY   64
147 LB40     CALL    SUBD
148          TCY     6
149          TBITI   3
150          BR      LB41
151          TCY     0
152          SETR
153          TCY     7
154          SETR
155          LDP     3
156          BR      0
157 LB39     CALL    SUBA
158          BR      LB38
159 LB41     CALL    SUBA
160          BR      LB40
161          PAGE    3
162          TCMIY   6E
163          TCMIY   6E
164 LB42     CALL    SUBD
165          TCY     6
166          TBITI   3
167          BR      LB43
```

TABLE 1 (contd.)

```
168          TBITI   0
169          BR      LB44
170 LB311    TCY     5
171          SETR
172          TCY     2
173          SETR
174          TCY     7
175          SETR
176          TCMIY   5
177          TCMIY   0
178 LB45     CALL    SUBD
179          TBITI   2
180          BR      LB326
181 LB325    TCY     6
182          BR      LB327
183 LB326    TCY     0
184          TBITI   2
185          BR      LB325
186          BL      LBJAMN 82
187 LB327    TBITI   3
188          BR      LB46
189          SETR
190          TCY     1
191          SETR
192          TCY     7
193          RSTR
194          TCMIY   6D
195          TCMIY   6C
196 LB47     CALL    SUBD
197          TBITI   2
198          BR      LB329
199 LB328    TCY     6
200          BR      LB330
201 LB329    TCY     0
202          TBITI   2
203          BR      LB328
204          BL      LBJAMN82
205 LB330    TBITI   3
206          BR      LB48
207          TCY     0
208          LDP     4
209          BR      0
210 LB43     CALL    SUBA
211          BR      LB42
212 LB46     CALL    SUBA
213          BR      LB45
214 LB48     CALL    SUBA
215          BR      LB47
216 LB44     BL      LBSM2
217          PAGE    4
218          TBITI   3B
219          BR      LBBO
220
221 LB107    TCY     9
222 LB50     RSTR
223          DYN
224          BR      LB50
225          TCY     10
225          SETR
226          RSTR
227          TCY     6
228          TBITI   1
229          BR      LB53
230          BR      LB54
```

TABLE 1 (contd.)

```
231 LB53    TCY     3
232         CALL    SUBE
233         TBITI   1
234         BR      LB55
235         TCY     3
236         RSTR
237 LB54    BL      LB87
238 LB55    CALL    SUBA
239         BR      LB53
240 LB49    TCY     7
241         TCMIY
242         TCMIY   6C
243 LB57    CALL    SUBD
244         TBITI   2
245         BR      LB332
246 LB331   TCY     6
247         BR      LB333
248 LB332   TCY     0
249         TBITI   2
250         BR      LB331
251         BL      LBJAMN82
252 LB333   TBITI   3
253         BR      LB58
254         TCY     2
255         RSTR
256 LB60    CALL    SUBF
257         TBITI   1
258         BR      LB61
259         CALL    SUBA
260         BR      LB60
261 LB61    TCY     1
262         RSTR
263         TCY     2
264         SETR
265         TCY     6
266         SBIT    2
267         TCY     9
268         TCMIY   6D
269         TCMIY   64
270         LDP     5
271         BR      0
272 LB58    CALL    SUBA
273         BR      LB57
274         PAGE    5
275         TCMIY   68
276 LB65    CALL    SUBD
277         TCY     0
278         TBITI   3
279         BR      LB310
280         BR      LB334
281 LB310   TCY     5
282         TBITI   2
283         BR      LB335
284 LB67    CALL    SUBA
285         BR      LB65
286 LB335   TCY     0
287         TBITI   2
288         BR      LB67
289         BL      LBJAM
290 LB334   TCY     5
291         RSTR
292         TCY     6
293         RSTR
294         TCY     7
```

TABLE 1 (contd.)

```
295             SETR
296             TCY     5
297             TBITI   3
298             BR      LB300
299             TCY     1
300             DMAN
301             BR      LB71
302             A10AAC
303             TAM
304             TCY     2
305             DMAN
306 LB71        TAM
307             BR      LB70
308 LB300       RBIT    3
309 LB70        TCY     1
310             MNEZ
311             BR      LB301
312             TCY     2
313             MNEZ
314             BR      LB301
315 LB69        TCY     7
316             TCMIY   6E
317             TCMIY   63
318 LB73        CALL    SUBD
319             TBITI   2
320             BR      LB339
321 LB340       TCY     6
322             BR      LB341
323 LB339       TCY     0
324             TBITI   2
325             BR      LB340
326             BL      LBJAMN
327 LB341       BL      LB343
328 LB301       BL      LB336
329             PAGE    6
330 LB343       TBITI   3
331             BR      LB74
332             TCY     0
333             RSTR
334             TCY     2
335             RSTR
336             TCY     7
337             RSTR
338             TCY     8
339             RSTR
340             TCY     7
341             TCMIY   63
342             TCMIY   64
343 LB76        CALL    SUBD
344             TBITI   2
345             BR      LB345
346 LB344       TCY     6
347             BR      LB346
348 LB345       TCY     0
349             TBITI   2
350             BR      LB344
351             BR      LBJAMN
352 LB346       TBITI   3
353             BR      LB77
354             BL      LB81
355 LBJAMN      TCY     5
356             SBIT    3
357 LBJAM       CALL    SUBA
358             TCY     9
```

TABLE I (contd.)

```
359 LB78    RSTR
360         DYN
361         BR      LB78
362         TCY     10
363         SETR
364         RSTR
365         SETR
366         RSTR
367         SETR
368         TCY     5
369         SETR
370 LB79    TCY     9
371         CALL    SUBE
372         TBITI   2
373         BR      LB80
374         CALL    SUBA
375         BR      LB79
376 LB74    CALL    SUBA
377         BL      LB73
378 LB77    CALL    SUBA
379         BR      LB76
380 LB80    TCY     5
381         RSTR
382         LDP     7
383         BR      0
384         PAGE    7
385         TCY     9
386         RSTR
387 LB82    CALL    SUBF
388         TBITI   2
389         BR      LB83
390         CALL    SUBA
391         BR      LB82
392 LB83    CALL    SUBB
393 LB84    CALL    SUBF
394         TBITI   2
395         BR      LB85
396         CALL    SUBB
402 LB85    CALL    SUBA
403         BR      LB84
404 LB87    TCY     9
405         CALL    SUBC
406         TBITI   0
407         BR      LB88
408         TBITI   1
409         BR      LB89
410 LB90    CALL    SUBA
411         BR      LB87
412 LB89    TCY     6
413         TBITI   0
414         BR      LB93
415         BR      LB90
416 LB88    TCY     6
417         TBITI   0
418         BR      LB92
419 LB93    TCY     7
420         CALL    SUBC
421         TBITI   3
422         BR      LB94
423         TCY     10
424         RSTR
425         TCY     5
426         RBIT    1
427         TCY     6
```

TABLE 1 (contd.)

```
428             RBIT    2
429             BL      LB37
430 LB92        CALL    SUBA
431             BR      LB87
432 LB94        CALL    SUBA
433             BR      LB93
434             PAGE    8
435 LB81        TCY     7
436             TCMIY   6F
437             TCMIY   6F
438 LB95        CALL    SUBD
439             TCY     6
440             TBITI   3
441             BR      LB96
442             TCY     4
443             RSTR
444             TCY     5
445             TBITI   1
446             BR      LB56
447             TCY     4
448             TMA
449             TCY     2
450             TAM
451             TCY     3
452             TMA
453             TCY     1
454             TAM
455 LB56        CALL    SUBA
456             TCY     5
457             TCMIY   0
458             TCMIY   0
459             BL      LB4
460 LB96        CALL    SUBA
461             BR      LB95
462 LBSM1       TCY     1
463             TCMIY   0
464             TCMIY   0
465 LB97        TCY     9
466             CALL    SUBE
467             TBITI   2
468             BR      LB98
469             TCY     5
470             SETR
471             CALL    SUBA
472             BR      LB97
473 LB98        TCY     9
474             RSTR
475             TCY     5
476             RSTR
477             TCY     5
478             RSTR
479             BL      LB37
480 LBSM2       TCY     2
481             SETR
482             BL      LB99
483             PAGE    9
484 LB99        TCY     8
485             CALL    SUBE
486             TBITI   1
487             BR      LB100
488             CALL    SUBA
489             BR      LB99
490 LB100       TCY     7
491             TCMIY   3
```

TABLE 1 (contd.)

```
492             TCMIY   6
493 LB101       CALL    SUBD
494             TCY     6
495             TBITI   3
496             BR      LB102
497             TCY     1
498             SETR
499             TCY     6
500             SETR
501             TCY     7
502             RSTR
503 LB103       TCY     7
504             TCMIY   1
505             TCMIY   3
506 LB104       CALL    SUBD
507             TCY     6
508             TBITI   3
509             BR      LB105
510             TCY     0
511             TBITI   3
512             BR      LB106
513             BL      LB107
514 LB102       CALL    SUBA
515             BR      LB101
516 LB105       CALL    SUBA
517             BR      LB104
518 LB106       TCY     7
519             TCMIY   11
520             TCMIY   3
521 LB108       CALL    SUBD
522             TCY     6
523             TBITI   3
524             BR      LB312
525             BL      LBOJAM
526 LB312       TCY     0
527             TBITI   1
528             BR      LB109
529             CALL    SUBA
530             BR      LB108
531 LB109       TCY     7
532             TCMIY   3
533             TCMIY   3
534             LDP     10
535             BR      0
536             PAGE    10
537 LB114       CALL    SUBD
538             TCY     6
539             TBITI   3
540             BR      LB115
541             TCY     2
542             RSTR
543             TCY     7
544             TCMIY   3
545             TCMIY   3
546 LB116       CALL    SUBD
547             TCY     6
548             TBITI   3
549             BR      LB117
550             TCY     1
551             RSTR
552             TCY     2
553             SETR
554 LB118       CALL    SUBF
555             TBITI   1
```

TABLE 1 (contd.)

```
556          BR      LB119
557          TCY     1
558          IMAC
559          TAM
560          A6AAC
561          BR      LB120
562 LB122    TCY     6
563          RSTR
564          TCY     7
565          CALL    SUBC
566          LDP     11
567          BR      0
568 LB115    CALL    SUBA
569          BR      LB114
570 LB117    CALL    SUBA
571          BR      LB116
572 LB119    CALL    SUBA
573          BR      LB118
574 LB120    TAM
575          TCY     2
576          IMAC
577          TAM
578          A6AAC
579          BR      LB121
580          BR      LB120
581 LB121    TAM
582          BR      LB122
583          PAGE    11
584          TBITI   3
585          BR      LB123
586          TCY     6
587          SETR
588          TCY     7
589          TCMIY   3
590          TCMIY   3
591 LB124    CALL    SUBD
592          TCY     6
593          TBITI   3
594          BR      LB125
595 LB129    CALL    SUBF
596          TBITI   3
597          BR      LB313
598          BR      LB130
599 LB313    CALL    SUBA
600          BR      LB129
601 LB130    TCY     6
602          RSTR
603          TCY     7
604          SETR
605          BL      LB69
606 LB123    TCY     6
607          SETR
608          TCY     5
609          SBIT    1
610          BR      LB129
611 LB125    TCY     0
612          TBITI   1
613          BR      LB131
614          CALL    SUBA
615          BR      LB124
616 LB131    TCY     7
617          TCMIY   3
618          TCMIY   3
619 LB132    CALL    SUBD
```

TABLE 1 (contd.)

```
620          TCY     6
621          TBITI   3
622          BR      LB133
623 LB135    CALL    SUBF
624          TBITI   3
625          BR      LB136
626          TCY     8
627          SETR
628          TCY     1
629          SETR
630          LDP     12
631          BR      0
632 LB133    CALL    SUBA
633          BR      LB132
634 LB136    TCY     8
635          RSTR
636          CALL    SUBA
637          BR      LB135
638          PAGE    12
639          TCY     6
640          SBIT    2
641          BL      LB103
642 LB336    CALL    SUBF
643          TBITI   3
644          BR      LB302
645 LB303    CALL    SUBD
646          TBITI   2
647          BR      LB337
648          TCY     0
649          BR      LB338
650 LB302    TCY     5
651          SBIT    1
652          BL      LB69
653 LB337    TCY     0
654          TBITI   2
655          BR      LB338
656 LB350    BL      LBJAMN
657 LB338    TBITI   1
658          BR      LB304
659          CALL    SUBA
660          BR      LB303
661 LB304    TCY     7
662          TCMIY   3
663          TCMIY   6E
664 LB318    CALL    SUBD
665          TBITI   2
666          BR      LB347
667 LB348    TCY     6
668          TBITI   3
669          BR      LB349
670          BR      LB351
671 LB349    CALL    SUBA
672          BR      LB318
673 LB347    TCY     0
674          TBITI   2
675          BR      LB348
676          BR      LB350
690          PAGE    13
691 SUBB     TCY     15
692          TCMIY   8
693 LB202    DYN
694          BR      LB202
695          DMAN
696          TAM
```

TABLE 1 (contd.)

```
697          MNEZ
698          BR      LB202
699          RETN
700 SUBD     SETR
701          TKA
702          RSTR
703          TCY     0
704          TAM
705          RETN
706 SUBD     TKA
707          TCY     0
708          TAM
709          TBITI   0
710          BR      SUBD
711 LB203    TKA
712          TCY     0
713          TAM
714          TBITI   0
715          BR      LB204
716          BR      LB203
717 LB204    TCY     7
718          DMAN
719          BR      LB205
720          TAM
721          TCY     8
722          DMAN
723          BR      LB205
724          TCY     6
725          RBIT    3
726          BR      LB206
727 LB205    TAM
728          TCY     6
729          SBIT    3
730 LB206    TBITI   2
731          BR      LB322
732          TCY     5
733          RBIT    2
734          BR      LB323
735 LB322    TCY     9
736          DMAN
737          BR      LB324
738          TAM
739          TCY     10
740          DMAN
741          BR      LB324
742          TAM
743          TCY     11
744          DMAN
745          BR      LB324
746          TCY     6
747          RBIT    2
748          TCY     5
749          SBIT    2
750          BR      LB323
751 LB324    TAM
752          TCY     5
753 LB323    RETN
754          PAGE    14
755 SUBA     TCY     5
756          TBITI   0
757          BR      LB200
758          SBIT    0
759          TCY     12
760          RSTR
```

TABLE 1 (contd.)

```
761             TCY     1
762             TAM
763             TDO
764             TCY     11
765             SETR
766             BR      LB201
767 LB200       RBIT    0
768             TCY     11
769             RSTR
770             TCY     2
771             TMA
772             TDO
773             TCY     12
774             SETR
775 LB201       RETN
776 SUBE        SETR
777             TKA
778             TCY     0
779             TAM
780             RETN
781 SUBF        TKA
782             TCY     0
783             TAM
784             RETN
785 LBOJAM      TCY     10
786 LB110       RSTR
787             DYN
788             BR      LB110
789             TCY     10
790             SETR
791             RSTR
792             SETR
793             RSTR
794             SETR
795             RSTR
796 LB111       TCY     9
797             CALL    SUBC
798             TBITI   1
799             BR      LB112
800             CALL    SUBA
801             BR      LB111
802 LB112       TCY     2
803             SETR
804             BL      LB37
805 LB315       TCY     5
806             TBITI   2
807             BR      LB316
808             TCY     0
809             BL      LB13
810 LB316       BL      LB4
811             PAGF    15
812             LDP     15
813             TCY     12
814 LB1         RSTR
815             DYN
816             BR      LB1
817             CLO
818             LDX     0
819             CLA
820 LB2         TAM
821             DYN
822             BR      LB2
823 LB3         TCY     1
824             TCMIY   1
```

TABLE 1 (contd.)

825		TCY	3
826		TCMIY	1
827		TCY	5
828		SBIT	2
829	LB4	CALL	SUBA
830		TCY	0
831		SETR	
832		TKA	
833		RSTR	
834		ALEC	0
835		BR	LB305
836		BL	LB9
837	LB305	IYC	
838		SETR	
839		TKA	
840		RSTR	
841		ALEC	0
842		BR	LB306
843		BL	LB10
844	LB306	IYC	
845		SETR	
846		TKA	
847		RSTR	
848		ALEC	0
849		BR	LB307
850		BL	LB11
851	LB307	TCY	9
852		SETR	
853		TKA	
854		RSTR	
855		ALEC	0
856		BR	LB308
857		BL	LB12
858	LB308	TCY	5
859		RBIT	1
860		RBIT	3
861		CALL	SUBB
862		CALL	SUBA
863		CALL	SUBB
864		BR	LB4
865		END	

Reference is hereby directed to copending Patent Application No. 8419/78 Serial No. 1603441, from which this application is divided, and also to copending Patent Application No. 37833/80, which is also divided from Application No. 8419/78. Serial Nos. 1603442, 1603441.

WHAT WE CLAIM IS:—

1. A copying or printing apparatus comprising:

a plurality of operative means including processing means for performing an image forming process in which an image is formed on a recording medium;

input means for entering an input signal related to the operation of the processing means, and

control means operable to control the operation of the processing means in accordance with said input signal, said control means comprising memory means storing a program for the operational control of said processing means, and a plurality of outputs for providing control signals carrying instructions for controlling said operative means, said control means being arranged to provide on one of said outputs a plurality of distinguishable forms of control signal, each corresponding to a respective control operation for the operative means.

2. An apparatus according to claim 1 including means coupled to said one output for distinguishing between said different forms of control signal from said one output and for causing the respective said control operation to be effected.

3. An apparatus according to claim 1 or claim 2 wherein said control means is

arranged to provide, as one of said different forms of control signal, a signal indicative of a malfunction of the apparatus.

4. An apparatus according to claim 3 wherein said malfunction is a jamming of the recording medium.

5. An apparatus according to any preceding claim wherein said different forms of signals are pulse signals of different predetermined pulse modes.

6. An apparatus according to claim 5 wherein said different pulse modes are distinguishable by the number of pulses in said pulse signals.

7. An apparatus according to claim 2 or any claim dependent thereon wherein said operative means include a display means and said distinguishing means is arranged to cause said display means to display the occurrence of a malfunction in accordance with the said signals from the said one output.

8. An apparatus according to any preceding claim wherein said input means comprises a detector for producing said input signal to indicate a function of the processing means.

9. An apparatus according to any of claims 1 to 7 wherein said input means is operable to produce said input signal indicative of an operating instruction.

10. An apparatus according to any preceding claim wherein said control means comprises a single computer chip including said memory and said outputs.

R. G. C. JENKINS & CO.,
Chartered Patent Agents,
53/64, Chancery Lane,
London WC2A 1QU.
Agents for the Applicants.

Printed for Her Majesty's Stationery Office, by the Courier Press, Leamington Spa, 1981
Published by The Patent Office, 25 Southampton Buildings, London, WC2A 1AY, from which copies may be obtained.

1603443 COMPLETE SPECIFICATION
55 SHEETS
This drawing is a reproduction of the Original on a reduced scale
Sheet 1

FIG. 1

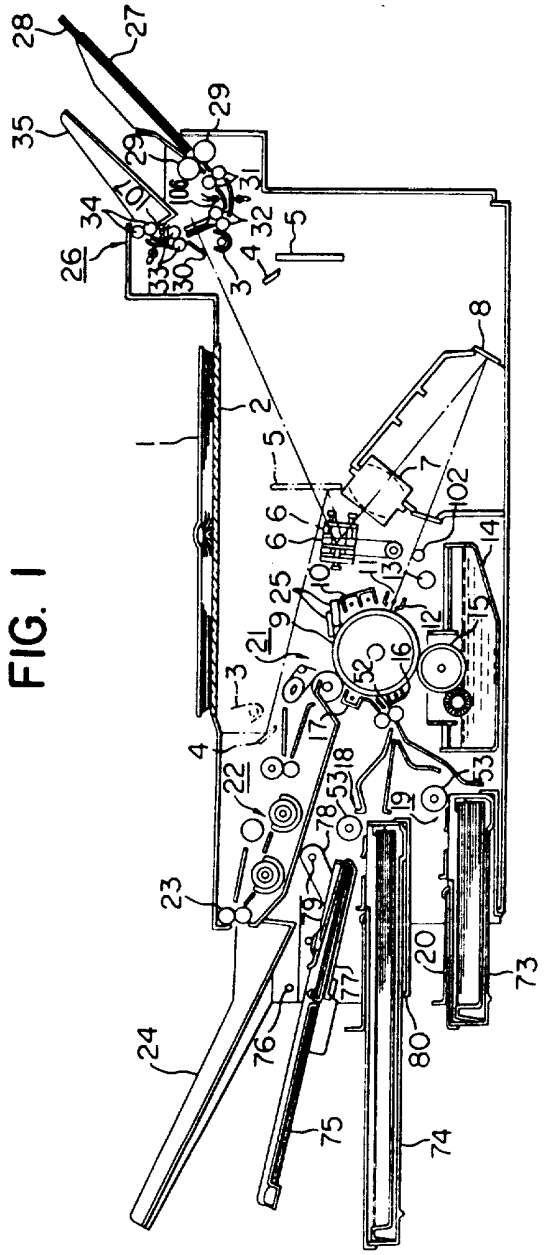

1603443 COMPLETE SPECIFICATION
55 SHEETS *This drawing is a reproduction of the Original on a reduced scale*
Sheet 2

FIG. 2

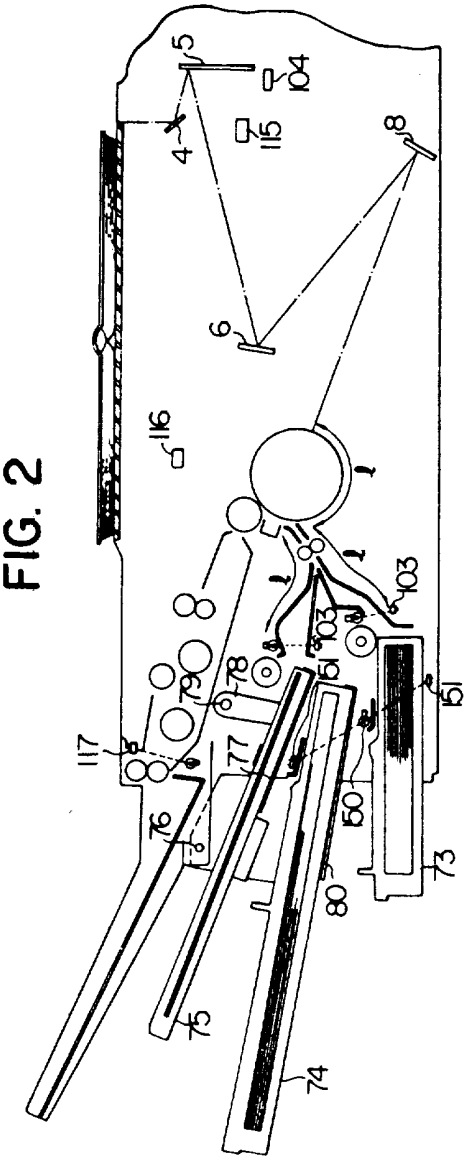

FIG. 12

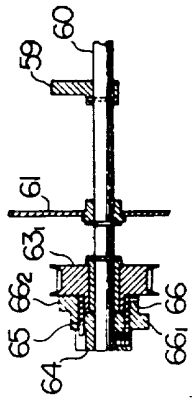

FIG. 4

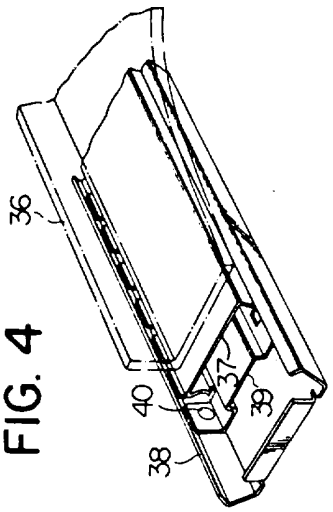

FIG. 3

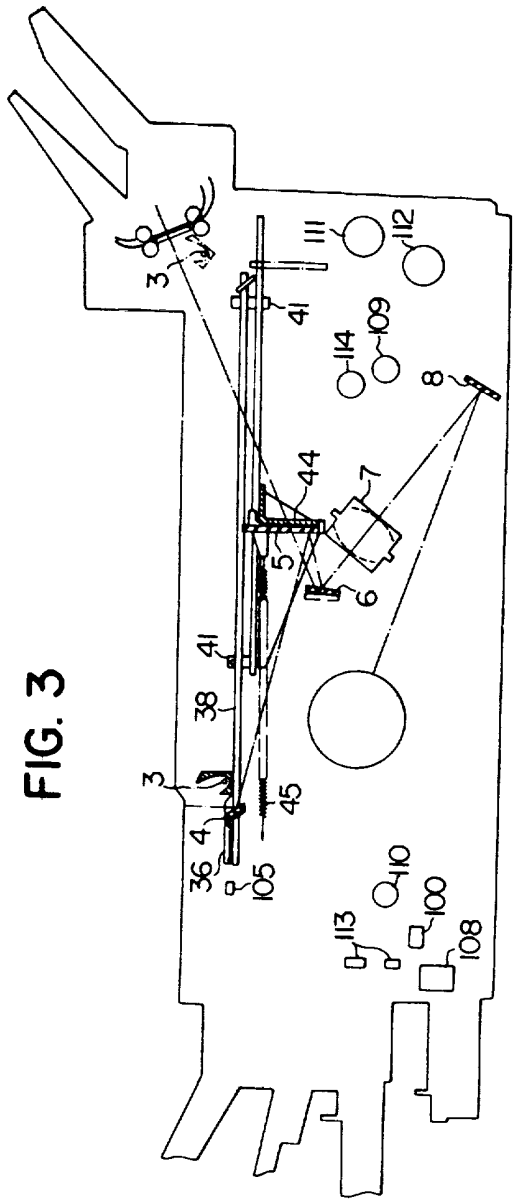

FIG. 8

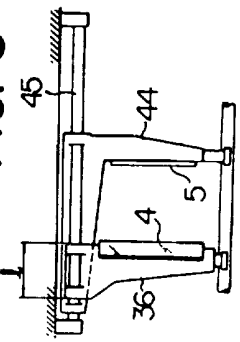

FIG. 6

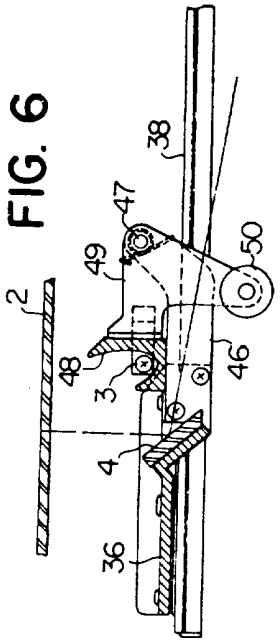

FIG. 5

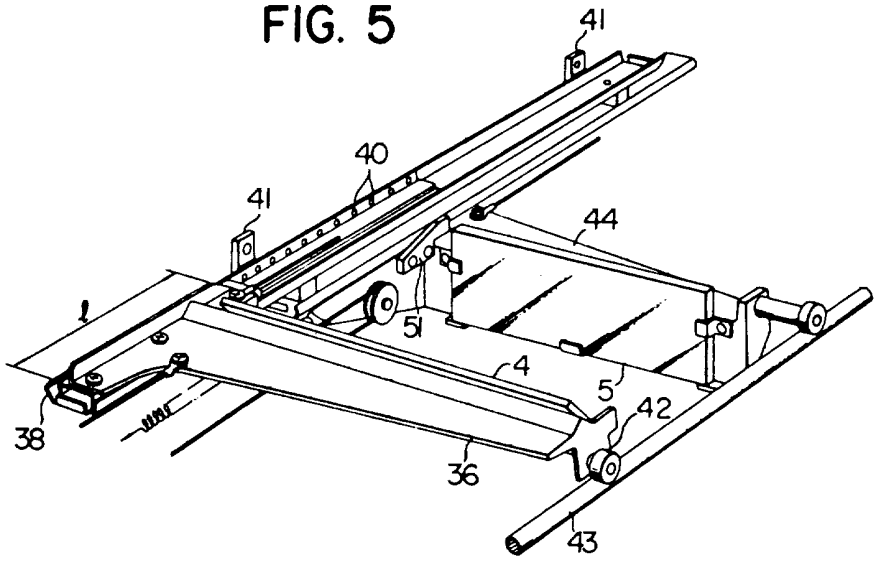

FIG. 7

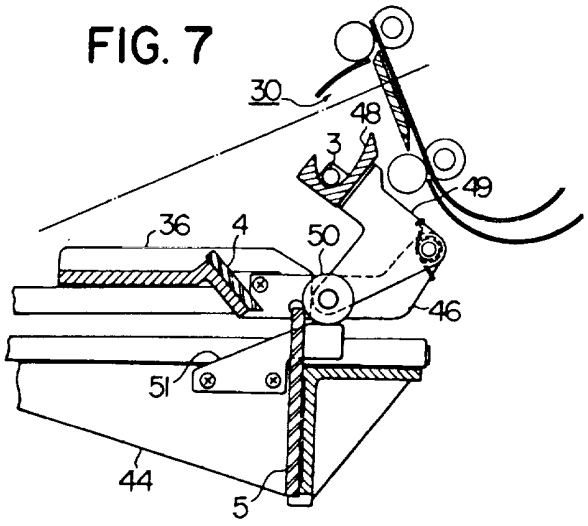

FIG. 9

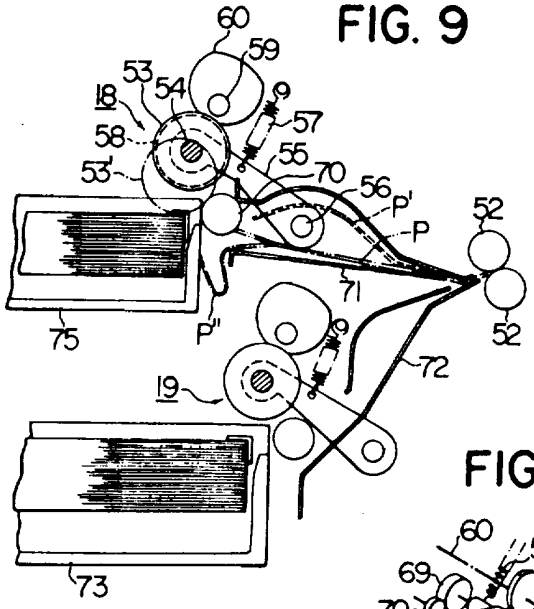

FIG. 10

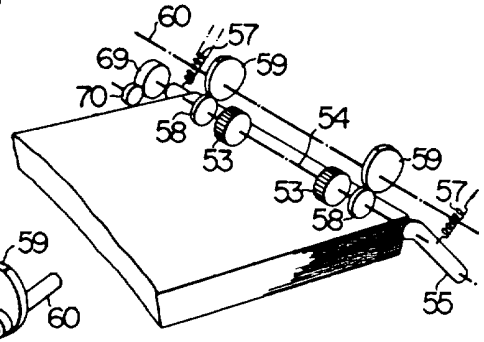

FIG. 11

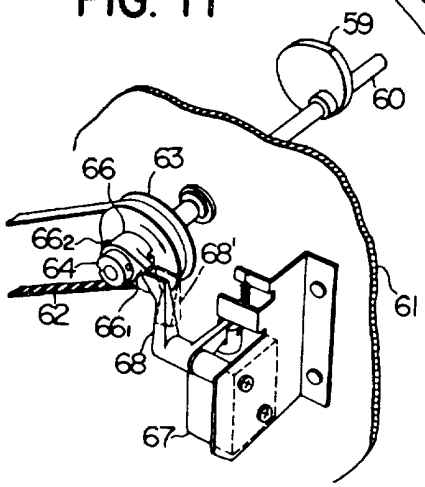

FIG. 13

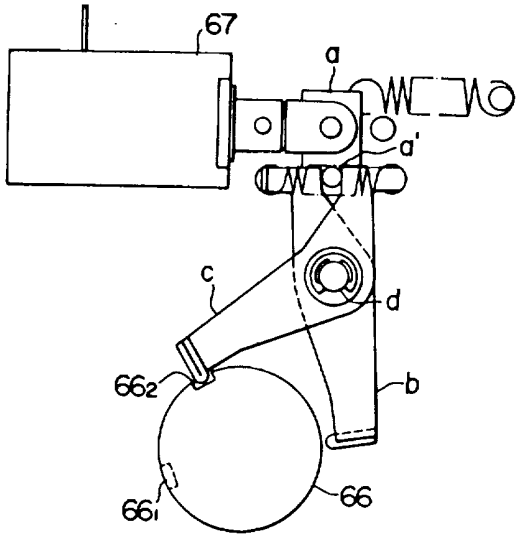

FIG. 14

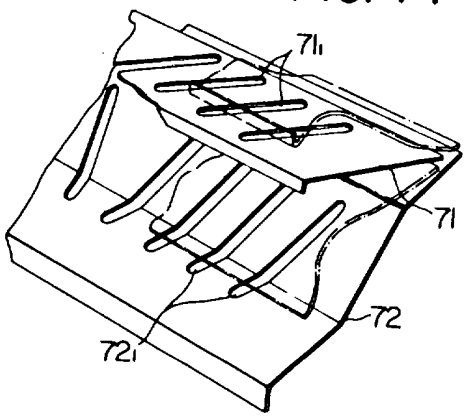

FIG. 15

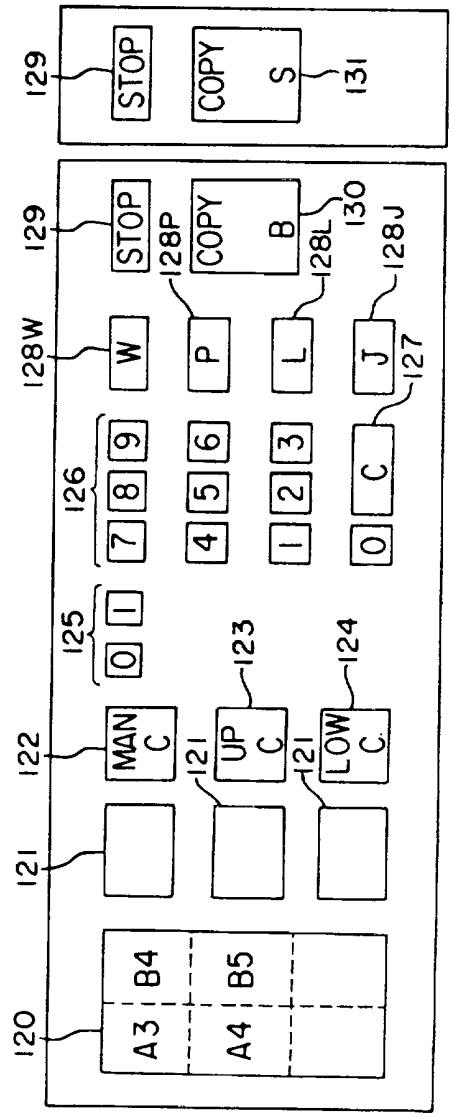
129
STOP
COPY
S
131
129
STOP
128P
COPY
B
128L
130
128J
128W
W
P
L
J
127
126
7
8
9
4
5
6
1
2
3
0
C
125
0
1
MAN C
122
121
UP C
123
121
LOW C
124
121
A3
B4
A4
B5
120

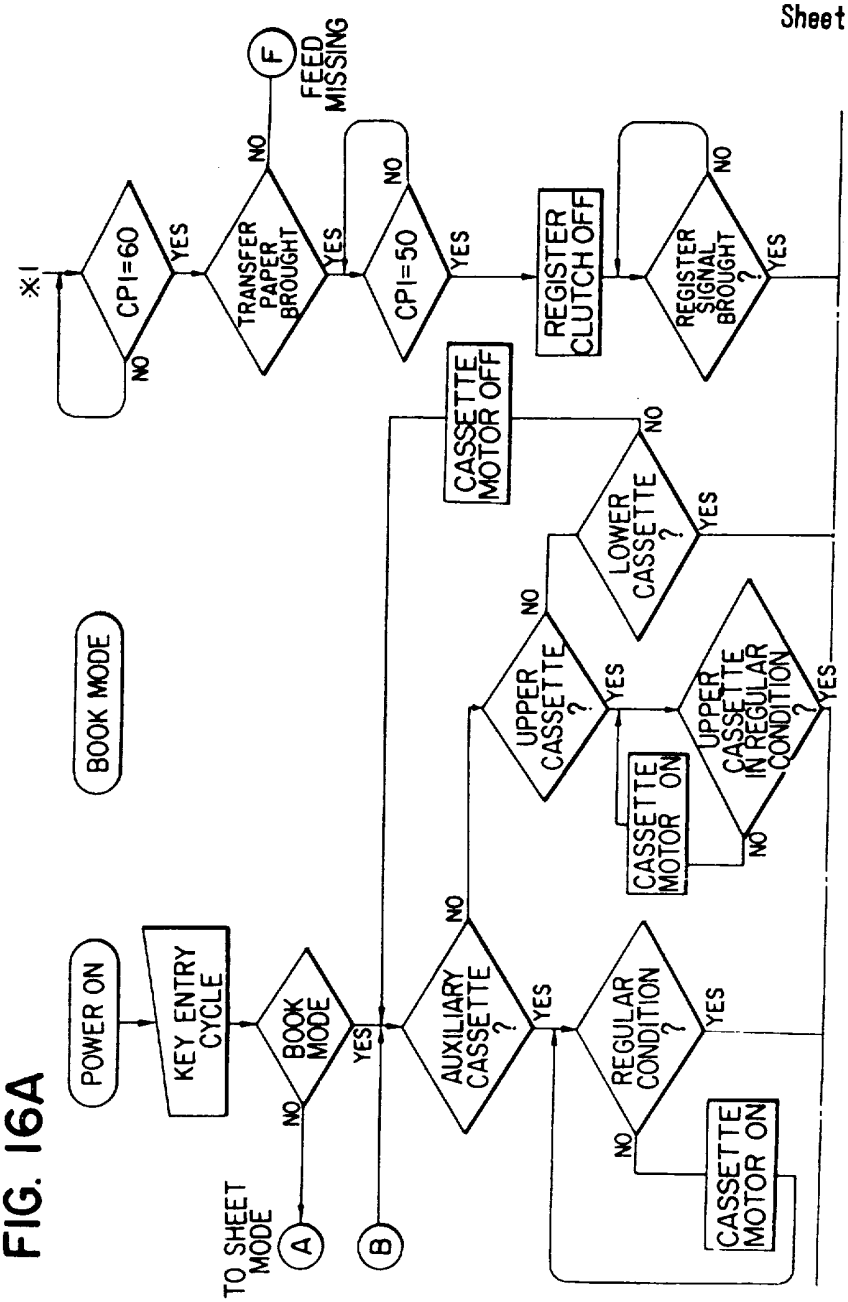
POWER ON
KEY ENTRY CYCLE
BOOK MODE
BOOK MODE
NO
YES
TO SHEET MODE
A
B
AUXILIARY CASSETTE ?
NO
YES
CASSETTE MOTOR OFF
REGULAR CONDITION ?
NO
YES
CASSETTE MOTOR ON
UPPER CASSETTE ?
NO
YES
CASSETTE MOTOR ON
LOWER CASSETTE ?
NO
YES
UPPER CASSETTE IN REGULAR CONDITION ?
NO
YES
REGISTER CLUTCH OFF
REGISTER SIGNAL BROUGHT ?
NO
YES
CPI=50
NO
YES
TRANSFER PAPER BROUGHT
NO
YES
F
FEED MISSING
※1
CPI=60
NO
YES

FIG. 16A

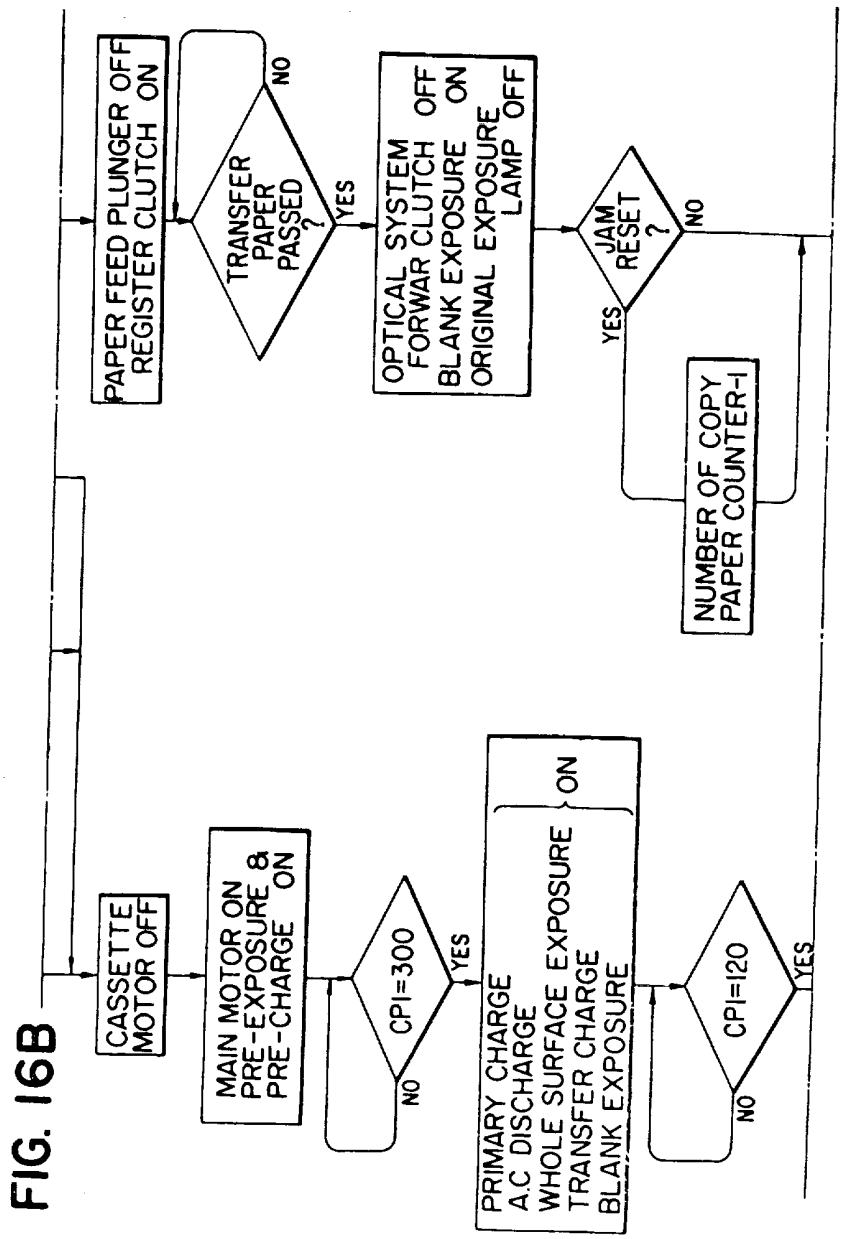
CASSETTE MOTOR OFF
MAIN MOTOR ON PRE-EXPOSURE & PRE-CHARGE ON
CPI=300
NO
YES
PRIMARY CHARGE A.C DISCHARGE WHOLE SURFACE EXPOSURE TRANSFER CHARGE BLANK EXPOSURE } ON
CPI=120
NO
YES
PAPER FEED PLUNGER OFF REGISTER CLUTCH ON
TRANSFER PAPER PASSED ?
NO
YES
OPTICAL SYSTEM FORWAR CLUTCH OFF BLANK EXPOSURE ON ORIGINAL EXPOSURE LAMP OFF
JAM RESET ?
YES
NO
NUMBER OF COPY PAPER COUNTER-1

FIG. 16B

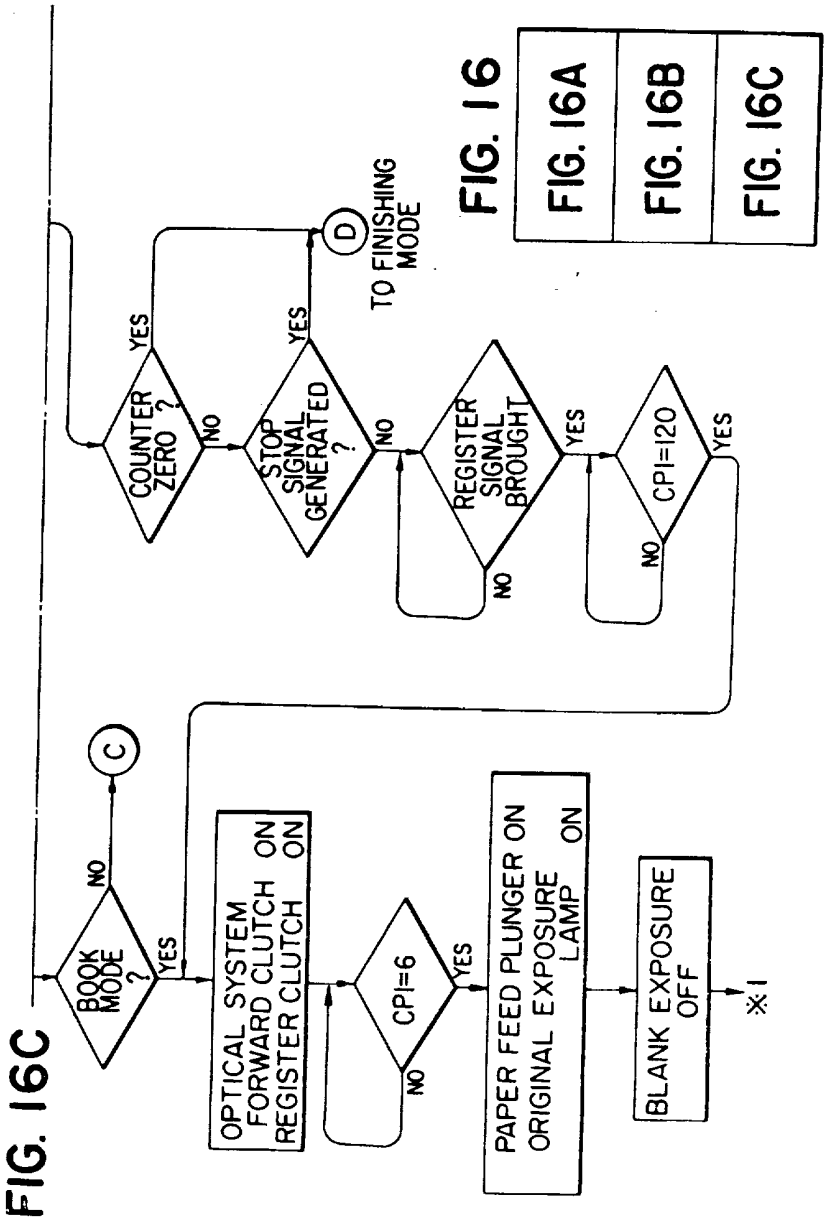

FIG. 16C

FIG. 16

FIG. 16A	FIG. 16B	FIG. 16C

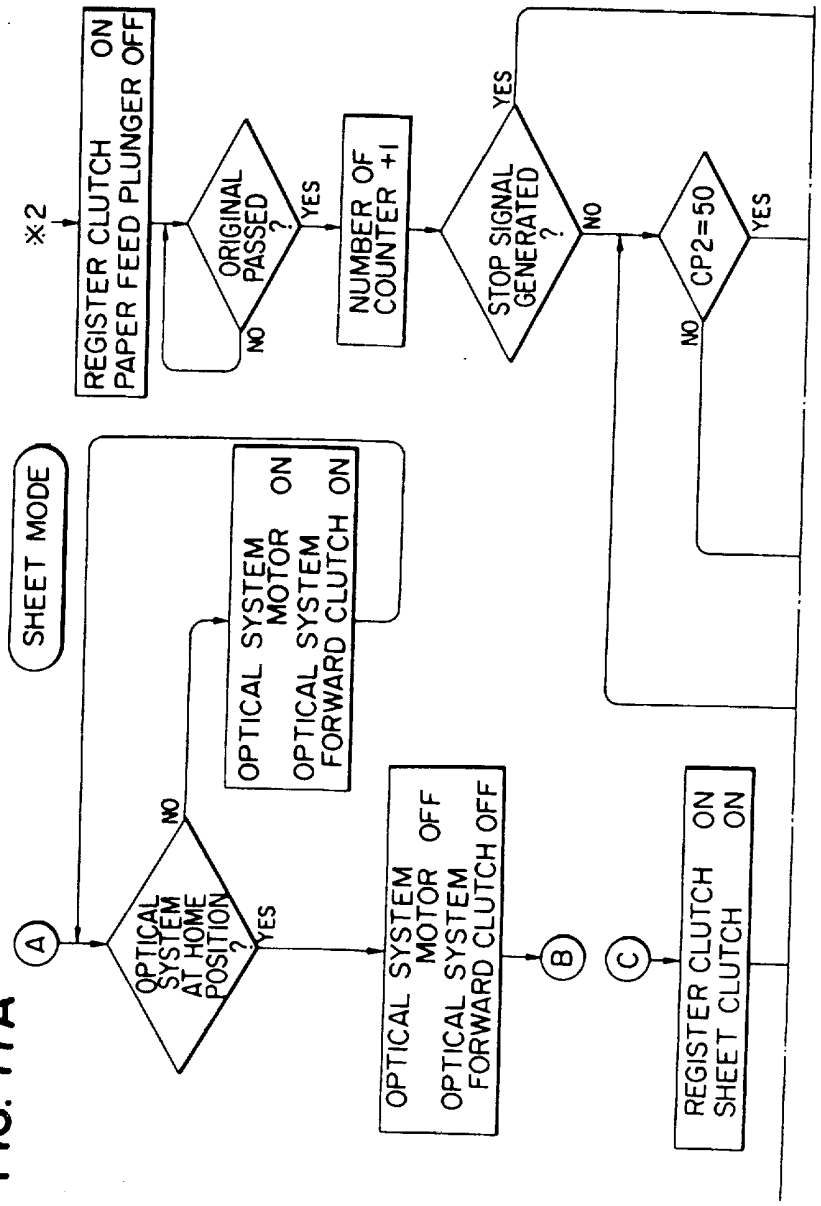
SHEET MODE
A
OPTICAL SYSTEM AT HOME POSITION ?
NO
YES
OPTICAL SYSTEM MOTOR ON
OPTICAL SYSTEM FORWARD CLUTCH ON
OPTICAL SYSTEM MOTOR OFF
OPTICAL SYSTEM FORWARD CLUTCH OFF
B
C
REGISTER CLUTCH ON
SHEET CLUTCH ON
※2
REGISTER CLUTCH ON
PAPER FEED PLUNGER OFF
ORIGINAL PASSED ?
NO
YES
NUMBER OF COUNTER +1
STOP SIGNAL GENERATED ?
YES
NO
CP2=50
NO
YES

FIG. 17A

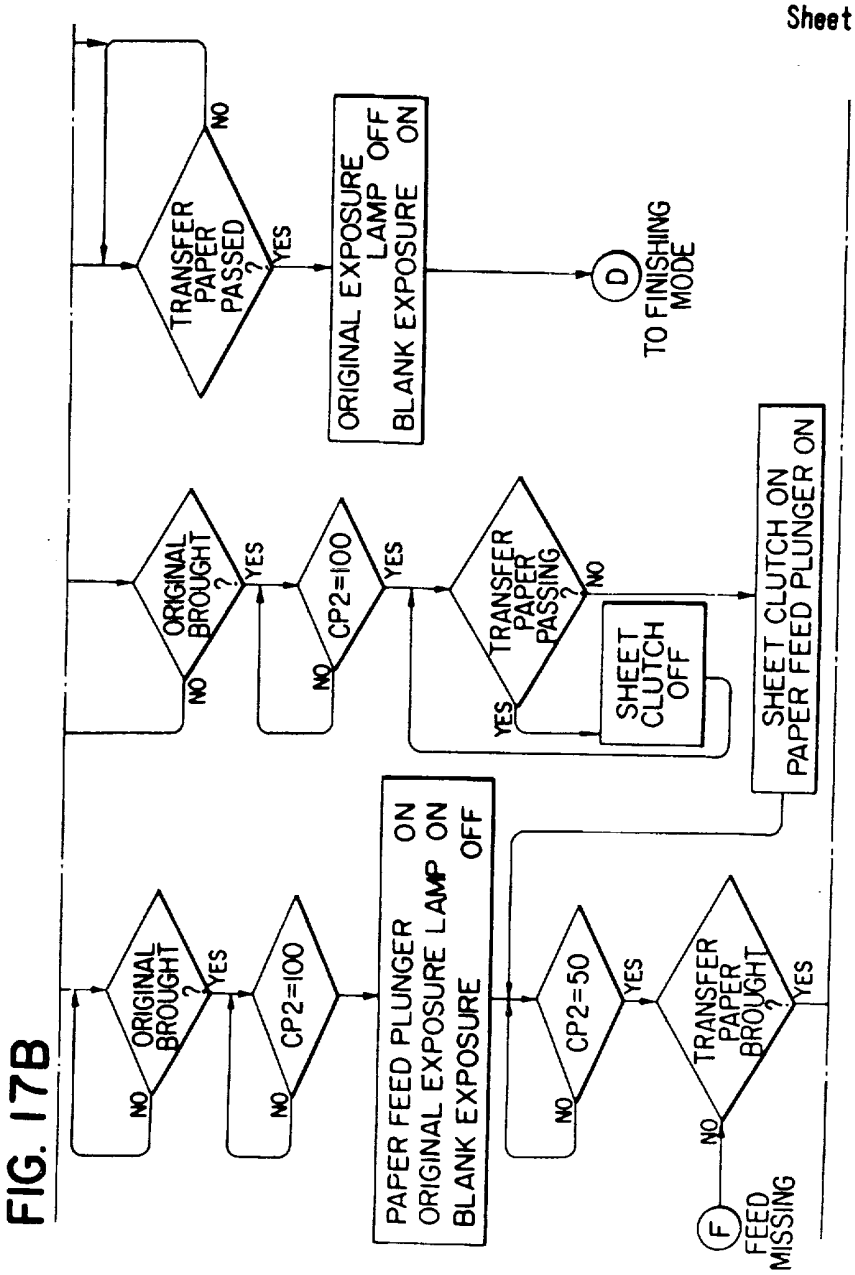
ORIGINAL BROUGHT ?
NO
YES
CP2=100
NO
YES
PAPER FEED PLUNGER ON
ORIGINAL EXPOSURE LAMP ON
BLANK EXPOSURE OFF
CP2=50
NO
YES
TRANSFER PAPER BROUGHT ?
NO
YES
F
FEED MISSING
SHEET CLUTCH ON
PAPER FEED PLUNGER ON
TRANSFER PAPER PASSING ?
YES
NO
SHEET CLUTCH OFF
TRANSFER PAPER PASSED ?
NO
YES
ORIGINAL EXPOSURE LAMP OFF
BLANK EXPOSURE ON
D
TO FINISHING MODE

FIG. 17B

FIG. 17

FIG. 17A	FIG. 17B	FIG. 17C

FIG. 17C

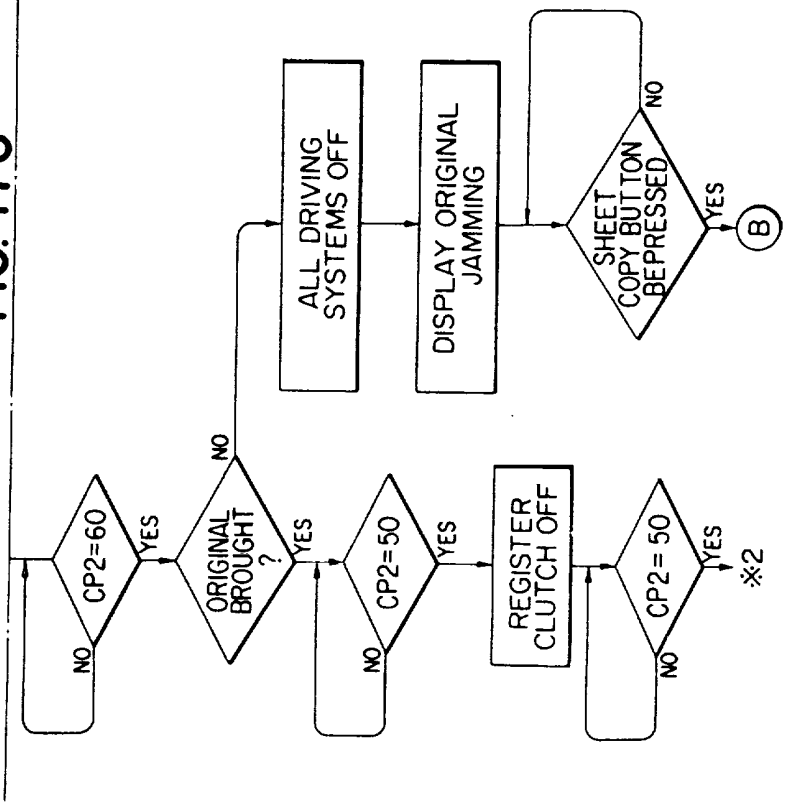

FIG. 18A

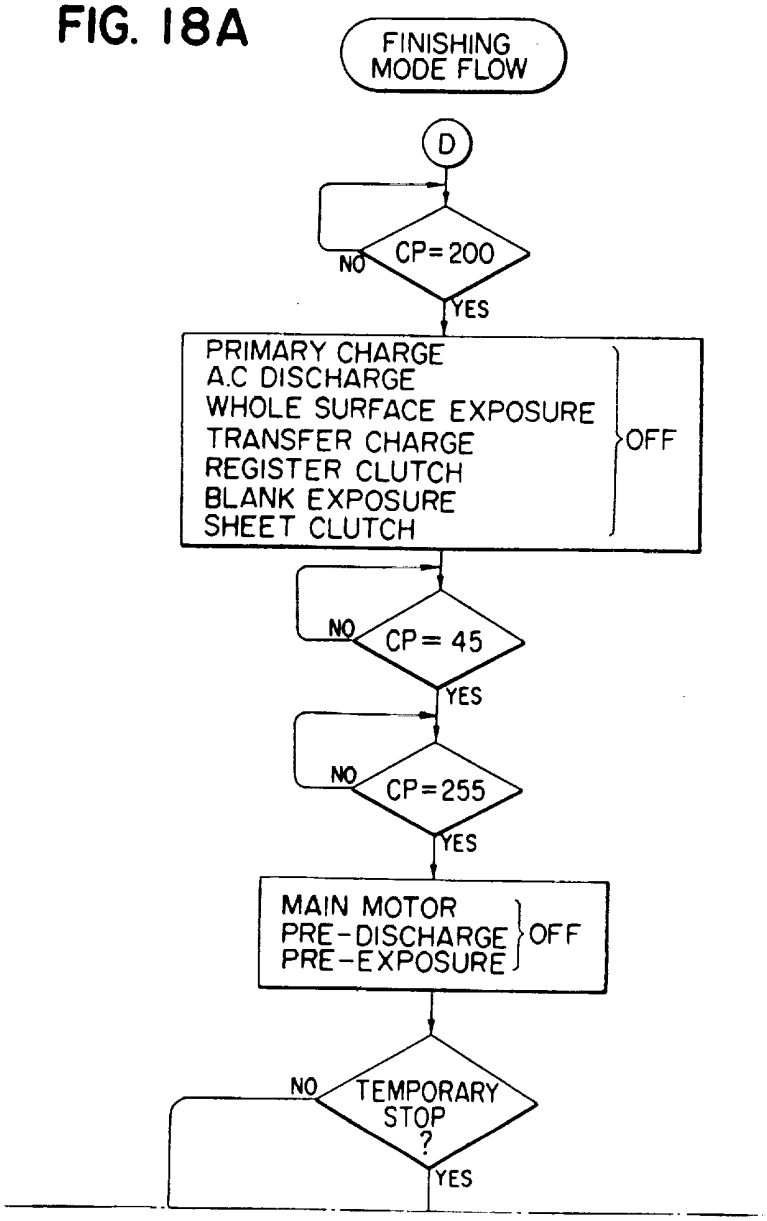
FINISHING MODE FLOW
D
CP=200
NO
YES
PRIMARY CHARGE
A.C DISCHARGE
WHOLE SURFACE EXPOSURE
TRANSFER CHARGE
REGISTER CLUTCH
BLANK EXPOSURE
SHEET CLUTCH
OFF
CP= 45
NO
YES
CP=255
NO
YES
MAIN MOTOR
PRE-DISCHARGE
PRE-EXPOSURE
OFF
TEMPORARY STOP ?
NO
YES

FIG. 18B

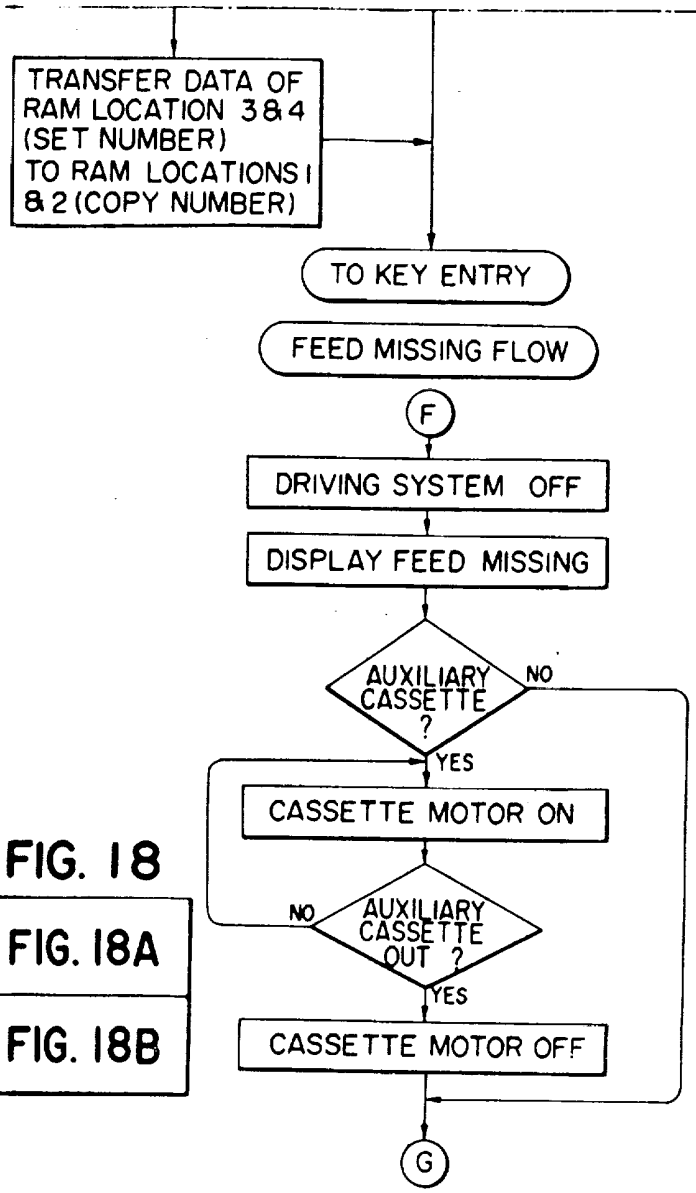

FIG. 18

FIG. 18A

FIG. 18B

FIG. 19A

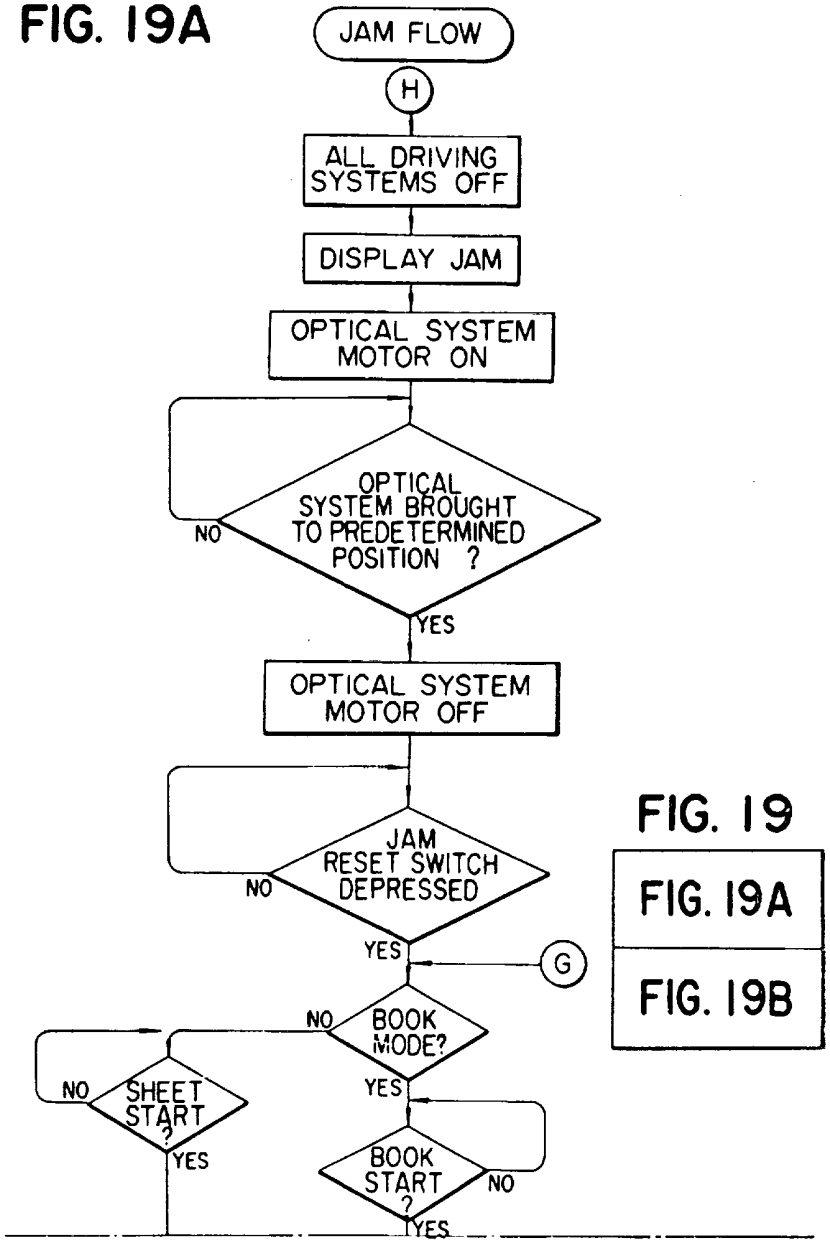

FIG. 19

FIG. 19A

FIG. 19B

FIG. 19B

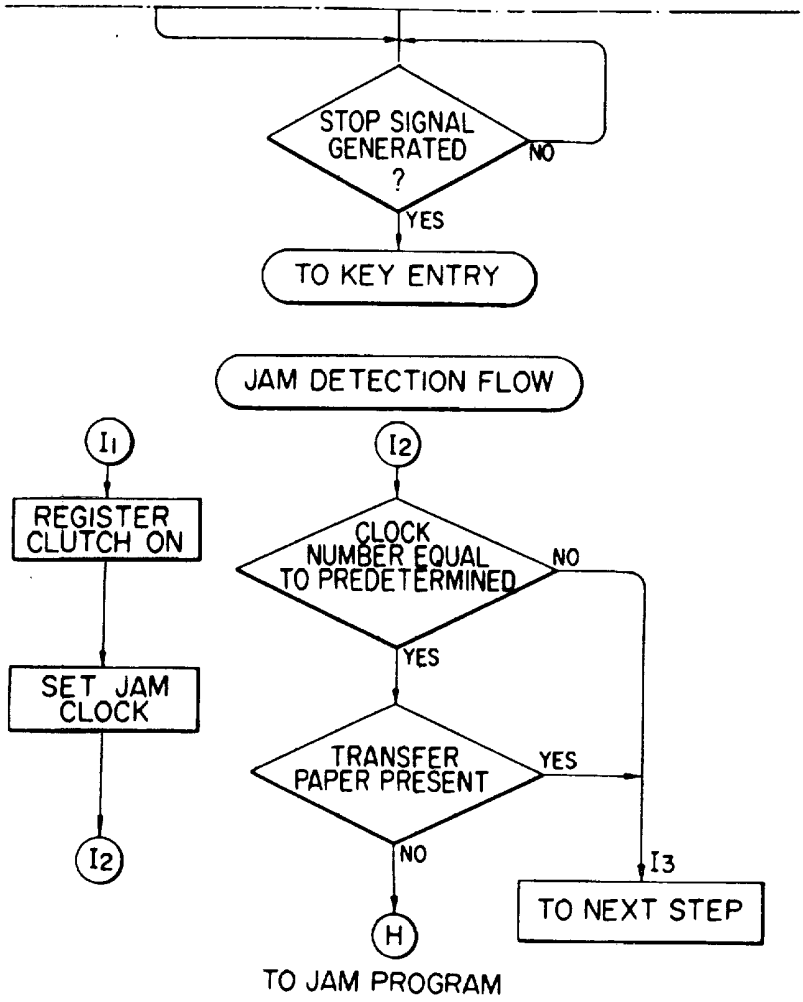
STOP SIGNAL GENERATED ?
NO
YES
TO KEY ENTRY
JAM DETECTION FLOW
I1
REGISTER CLUTCH ON
SET JAM CLOCK
I2
I2
CLOCK NUMBER EQUAL TO PREDETERMINED
NO
YES
TRANSFER PAPER PRESENT
YES
NO
I3
TO NEXT STEP
H
TO JAM PROGRAM

FIG. 20A

FIG. 20

FIG. 20A

FIG. 20B

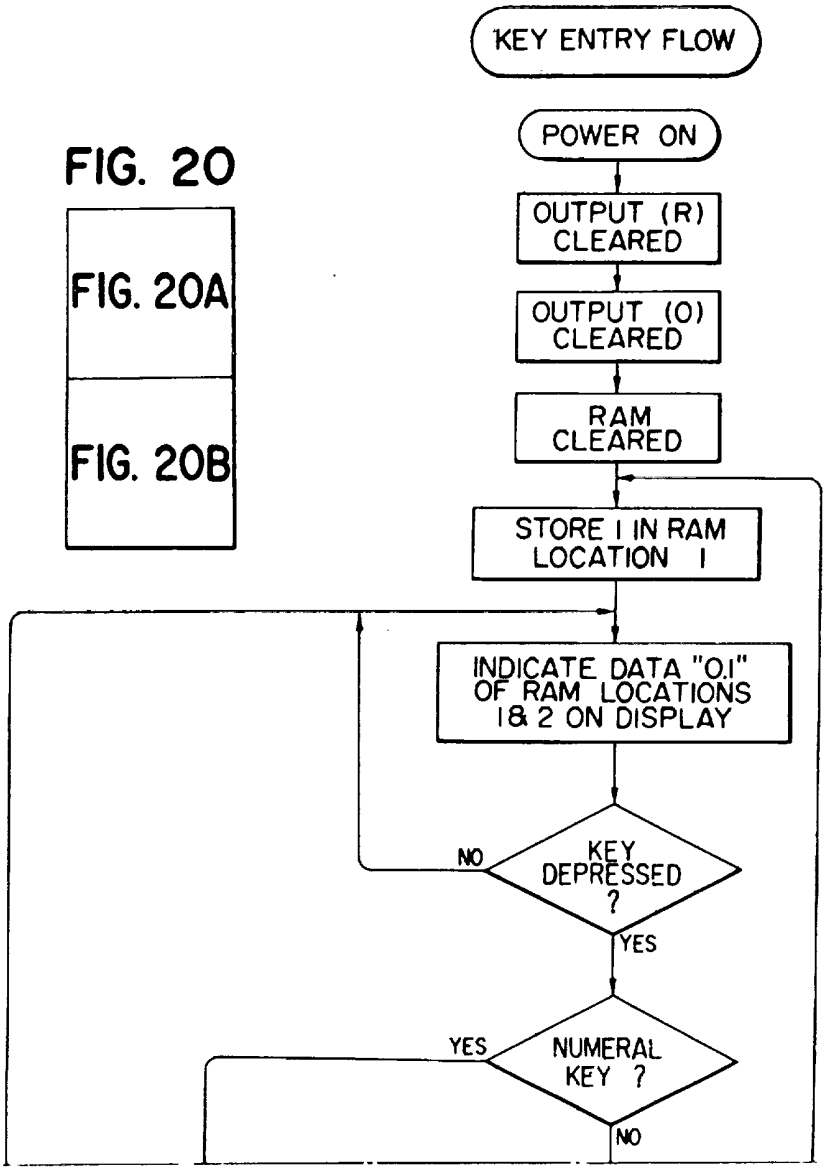

FIG. 20B

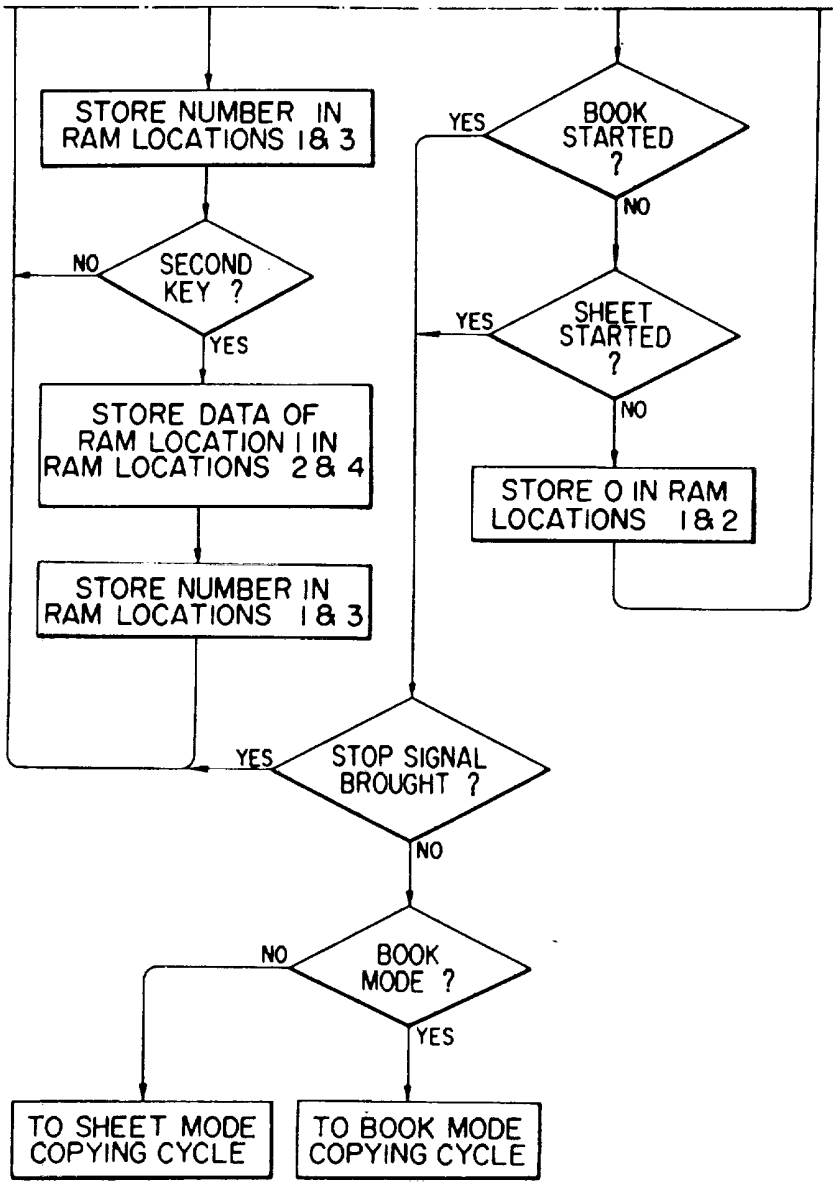
STORE NUMBER IN RAM LOCATIONS 1& 3
NO
SECOND KEY ?
YES
STORE DATA OF RAM LOCATION 1 IN RAM LOCATIONS 2& 4
STORE NUMBER IN RAM LOCATIONS 1& 3
YES
BOOK STARTED ?
NO
YES
SHEET STARTED ?
NO
STORE 0 IN RAM LOCATIONS 1& 2
YES
STOP SIGNAL BROUGHT ?
NO
NO
BOOK MODE ?
YES
TO SHEET MODE COPYING CYCLE
TO BOOK MODE COPYING CYCLE

FIG. 21A

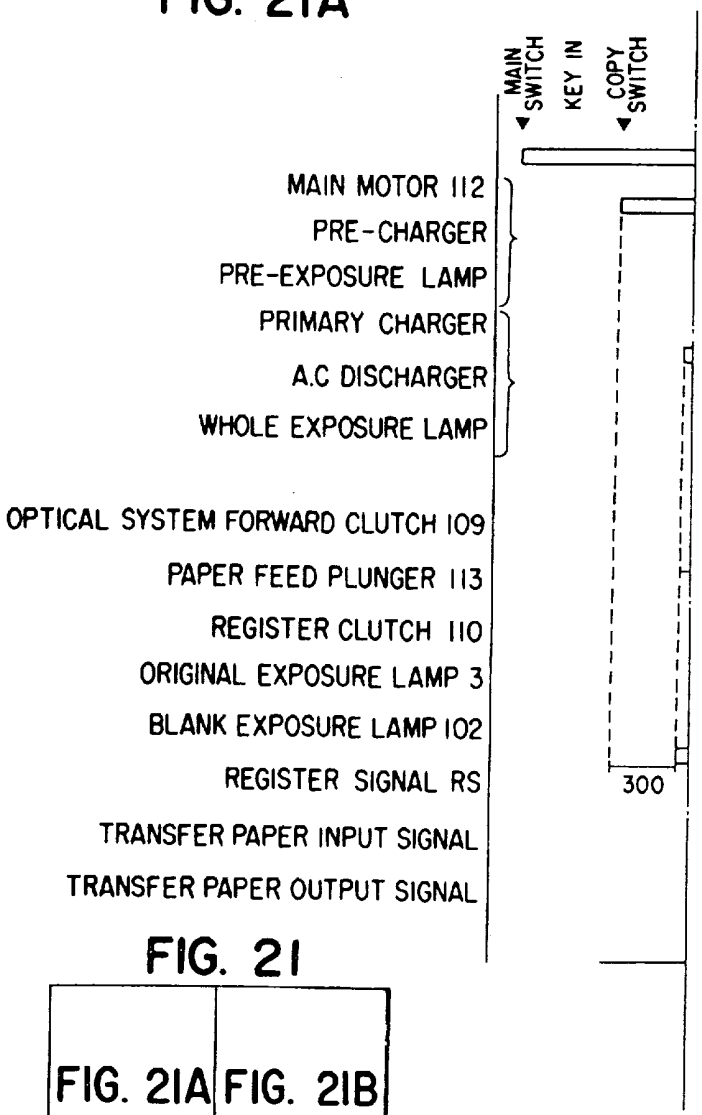

FIG. 21

FIG. 21A	FIG. 21B

FIG. 21B

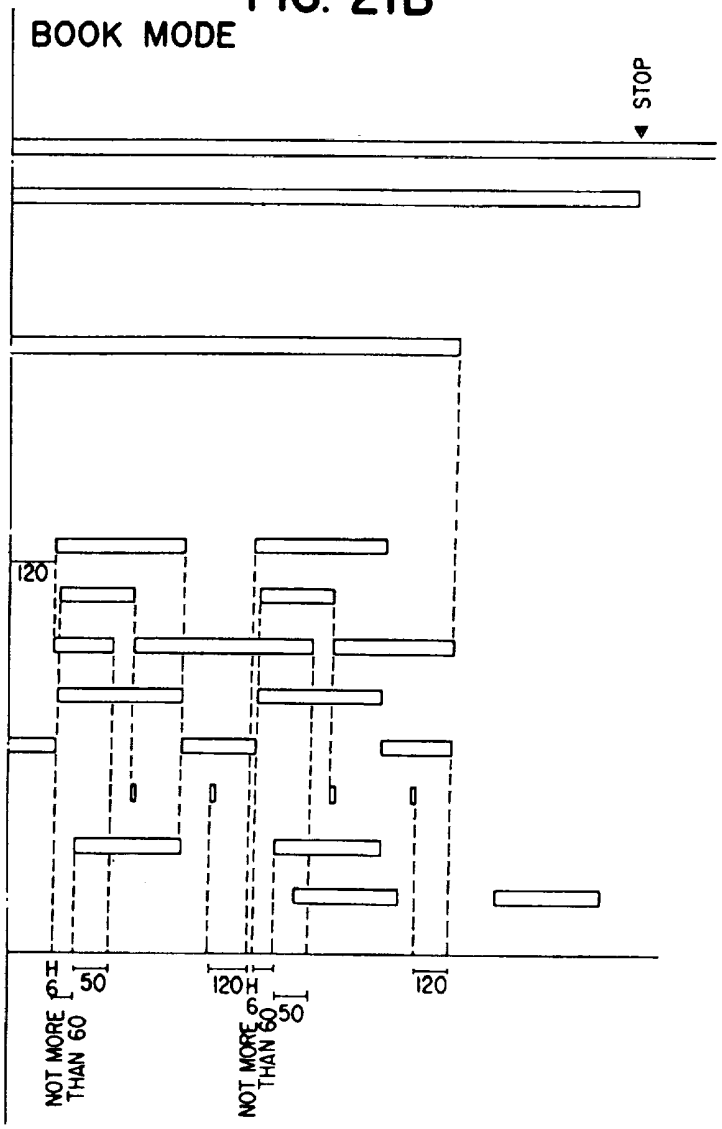
BOOK MODE
STOP
120
6
50
NOT MORE THAN 60
120
6
50
NOT MORE THAN 60
120

FIG. 22
SHEET MODE (1)

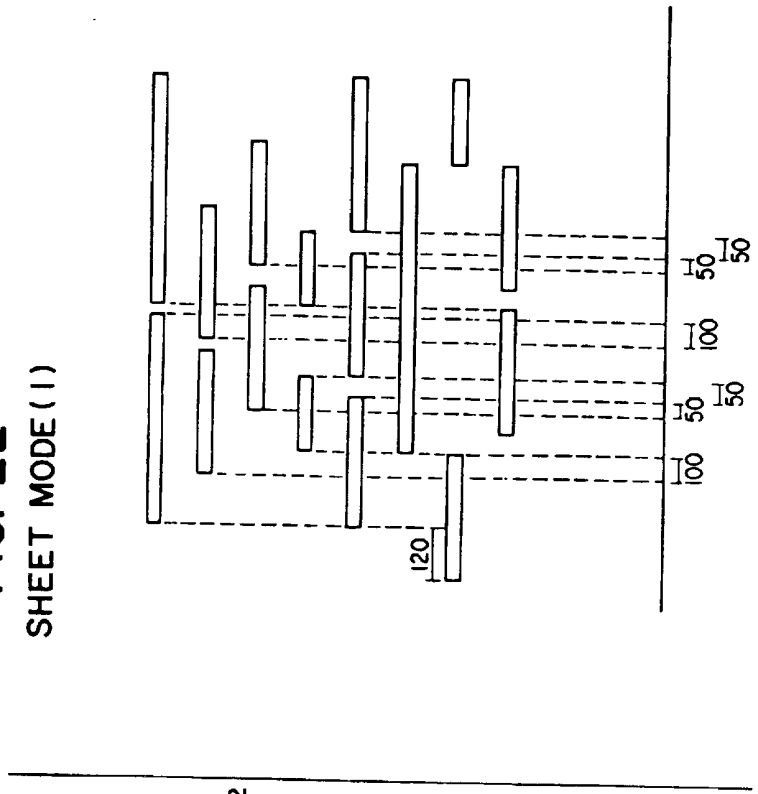

FIG. 23
SHEET MODE (2)

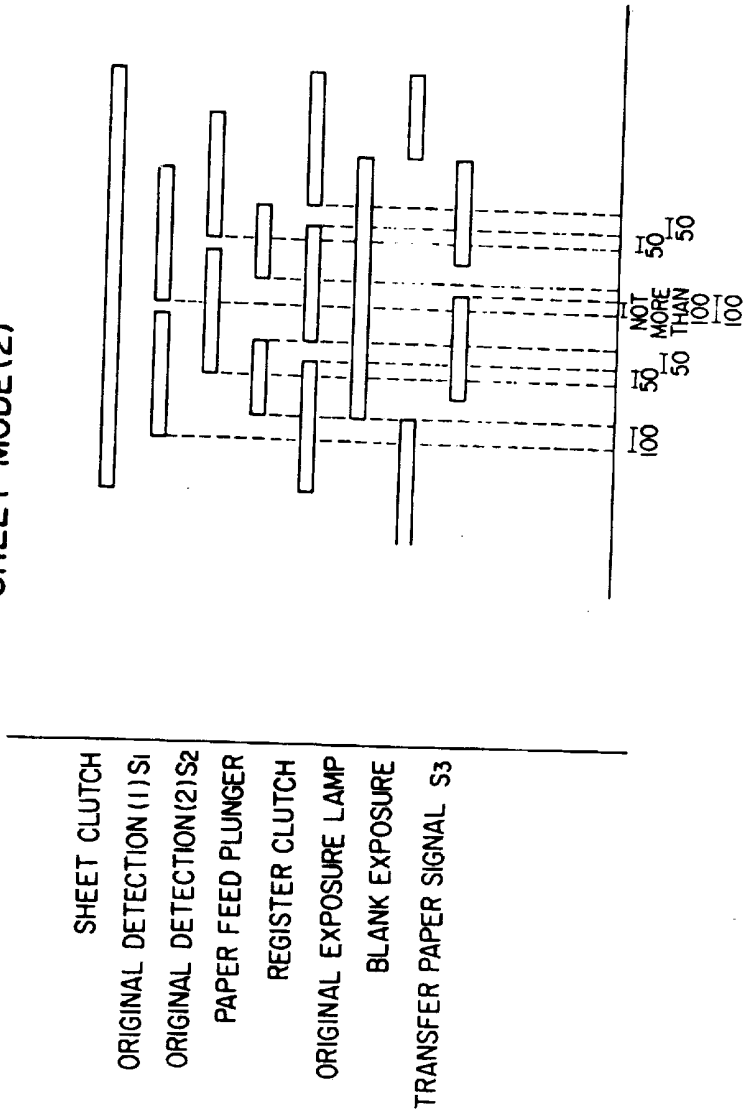

FIG. 24

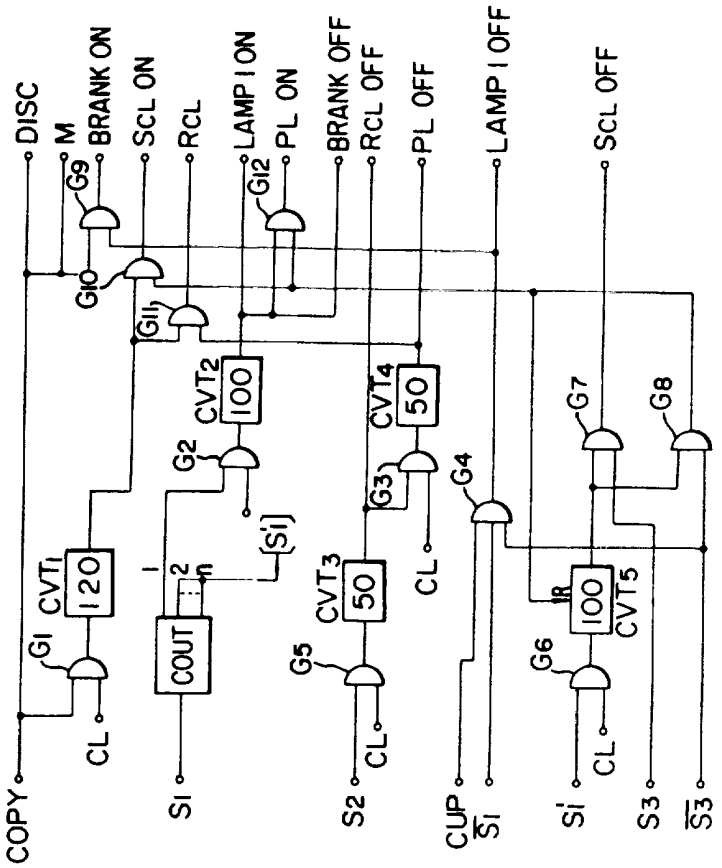
DISC
M
BRANK ON
SCL ON
RCL
LAMP I ON
PL ON
BRANK OFF
RCL OFF
PL OFF
LAMP I OFF
SCL OFF
G9
G10
G11
G12
CVT2
100
CVT4
50
G2
G3
G4
G7
G8
CVT1
120
G1
CL
COUT
1
2
n
(Si)
CVT3
50
G5
IR
100
CVT5
G6
COPY
SI
S2
CUP
SI
Si'
S3
S3

FIG. 25

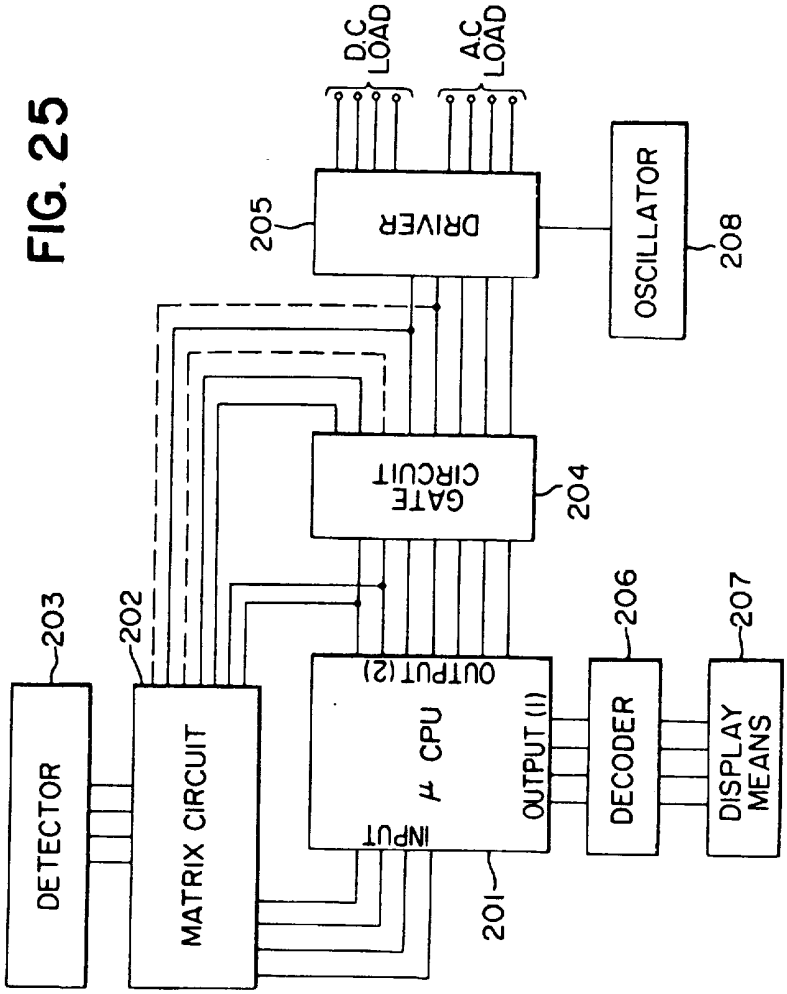
D.C LOAD
A.C LOAD
205
DRIVER
OSCILLATOR
208
GATE CIRCUIT
204
203
202
206
207
OUTPUT (2)
DETECTOR
MATRIX CIRCUIT
μ CPU
OUTPUT (1)
DECODER
DISPLAY MEANS
INPUT
201

FIG. 26A'

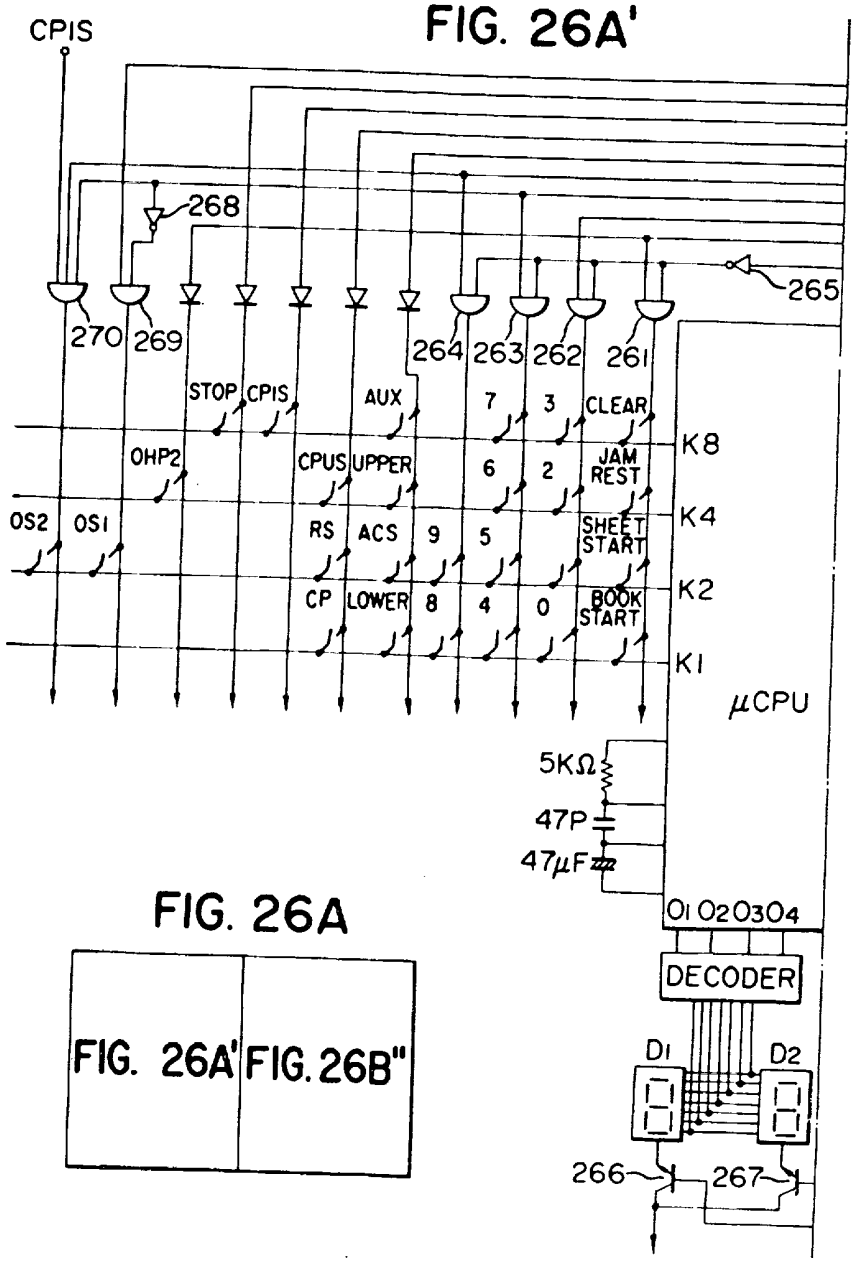

FIG. 26A

FIG. 26A"

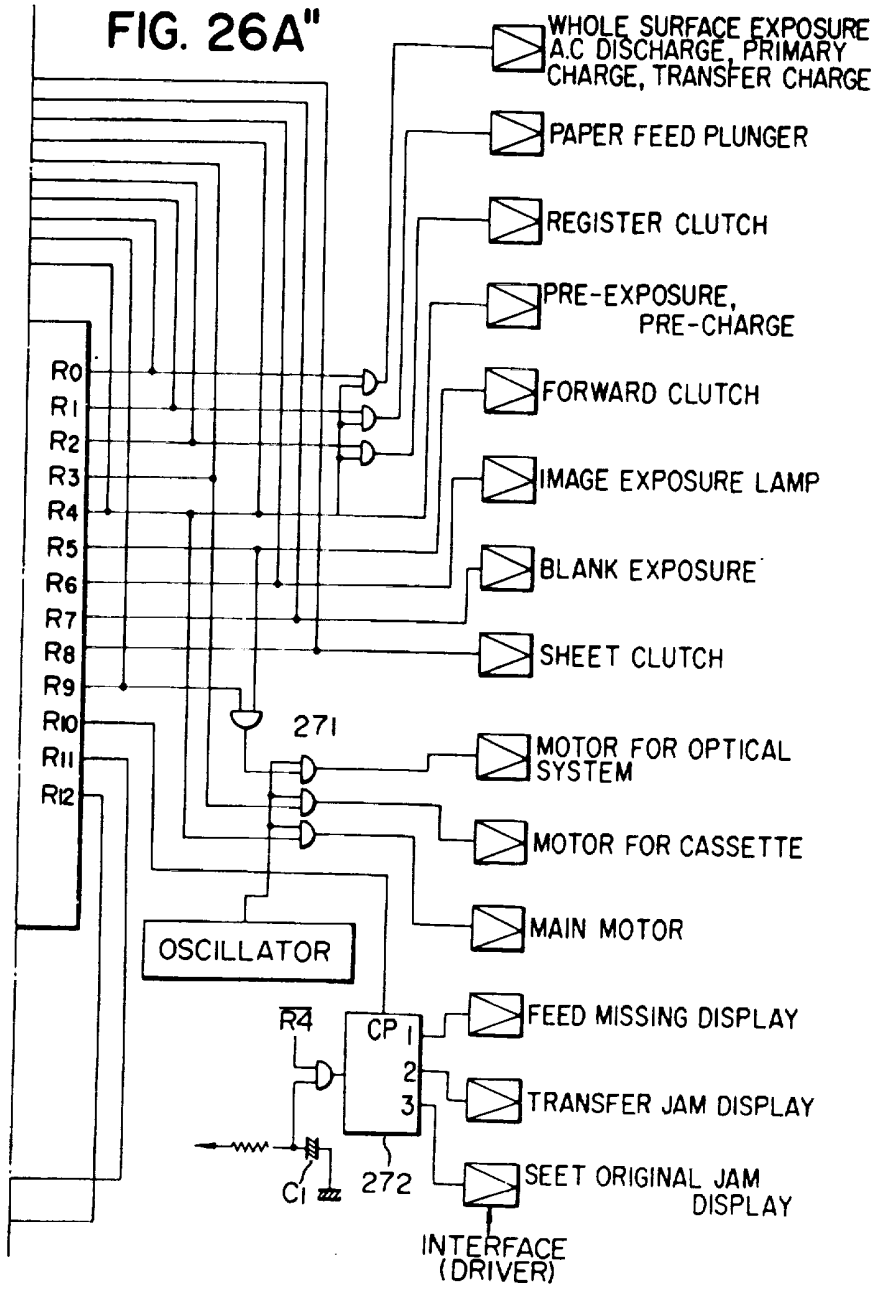
WHOLE SURFACE EXPOSURE A.C DISCHARGE, PRIMARY CHARGE, TRANSFER CHARGE
PAPER FEED PLUNGER
REGISTER CLUTCH
PRE-EXPOSURE, PRE-CHARGE
FORWARD CLUTCH
IMAGE EXPOSURE LAMP
BLANK EXPOSURE
SHEET CLUTCH
MOTOR FOR OPTICAL SYSTEM
MOTOR FOR CASSETTE
MAIN MOTOR
FEED MISSING DISPLAY
TRANSFER JAM DISPLAY
SEET ORIGINAL JAM DISPLAY
INTERFACE (DRIVER)
R0
R1
R2
R3
R4
R5
R6
R7
R8
R9
R10
R11
R12
271
OSCILLATOR
R4
CP
1
2
3
C1
272

FIG. 26B SWITCHES

OS1	106		FIRST DETECTING POSITION FOR SHEET ORIGINAL
OS2	107		SECOND DETECTING POSITION FOR SHEET ORIGINAL
OHP2	104		OPTICAL SYSTEM, HOME POSITION (SHEET MODE)
CPIS	103		INPUT SIGNAL OF TRANSFER PAPER
RS	116		REGISTER SWITCH
ACS	100		DETECTING SWITCH FOR AUXILARY CASSETTE POSITION
AUX	122	CASSETTE SELECTOR BUTTON	AUXILIARY CASSETTE
UPPER	123		UPPER CASSETTE
LOWER	124		LOWER CASSETTE
CPOS	117		TRANSFER DISCHARGING SIGNAL
JAM RESET	105		MACHINE COVER SWITCH
CLEAR	127	ACTUATOR	
SHEET START	131		
BOOK START	130		
0~9	126		
STOP	SIGNALS FOR ACTUATOR (129), NO PAPER, LOW FIXING TEMPERATURE, NO LIQUID		

1603443 COMPLETE SPECIFICATION
55 SHEETS *This drawing is a reproduction of the Original on a reduced scale*
Sheet 28

FIG. 26C

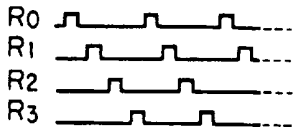

FIG. 26D

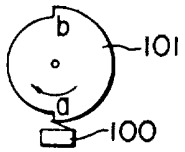

FIG. 26E

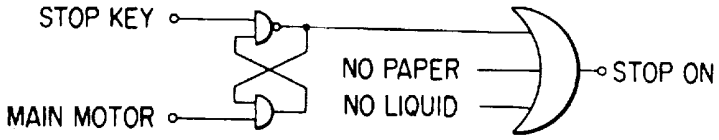

FIG. 27

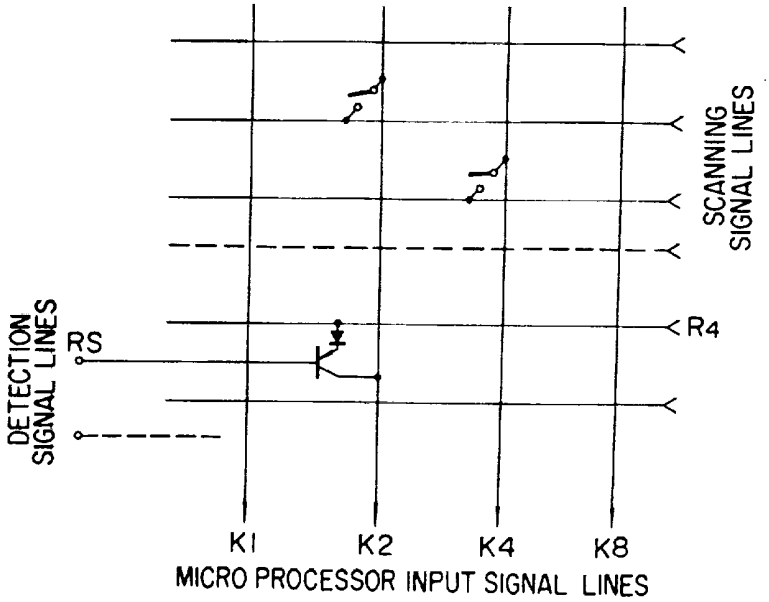

FIG. 28

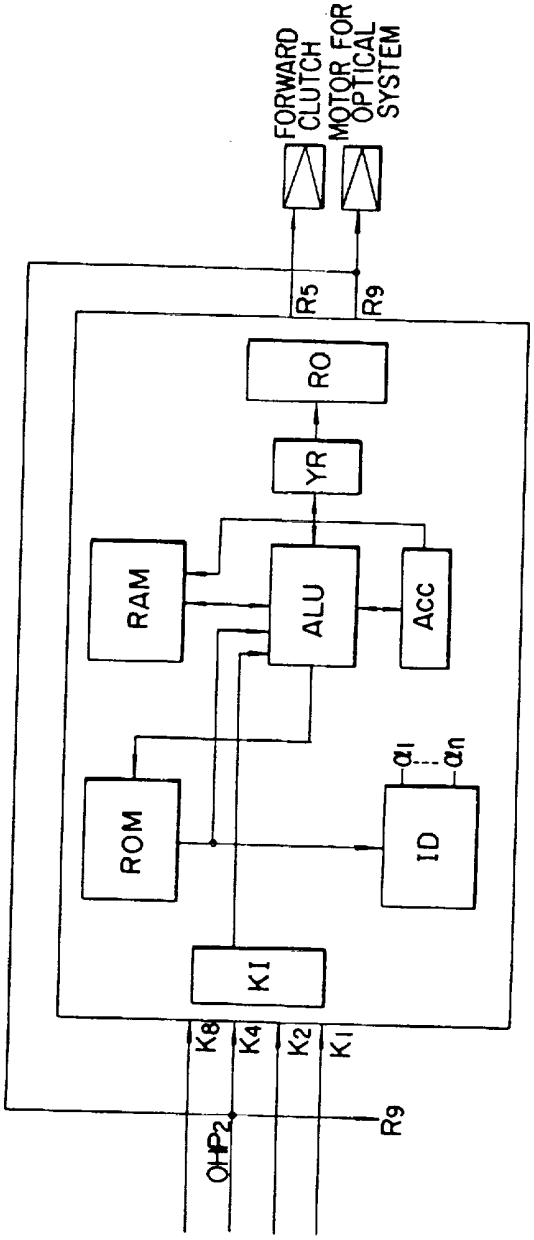
FORWARD CLUTCH
MOTOR FOR OPTICAL SYSTEM
R5
R9
RO
YR
RAM
ALU
Acc
ROM
ID
α1
αn
KI
K8
K4
K2
K1
R9
OHP2

FIG. 29

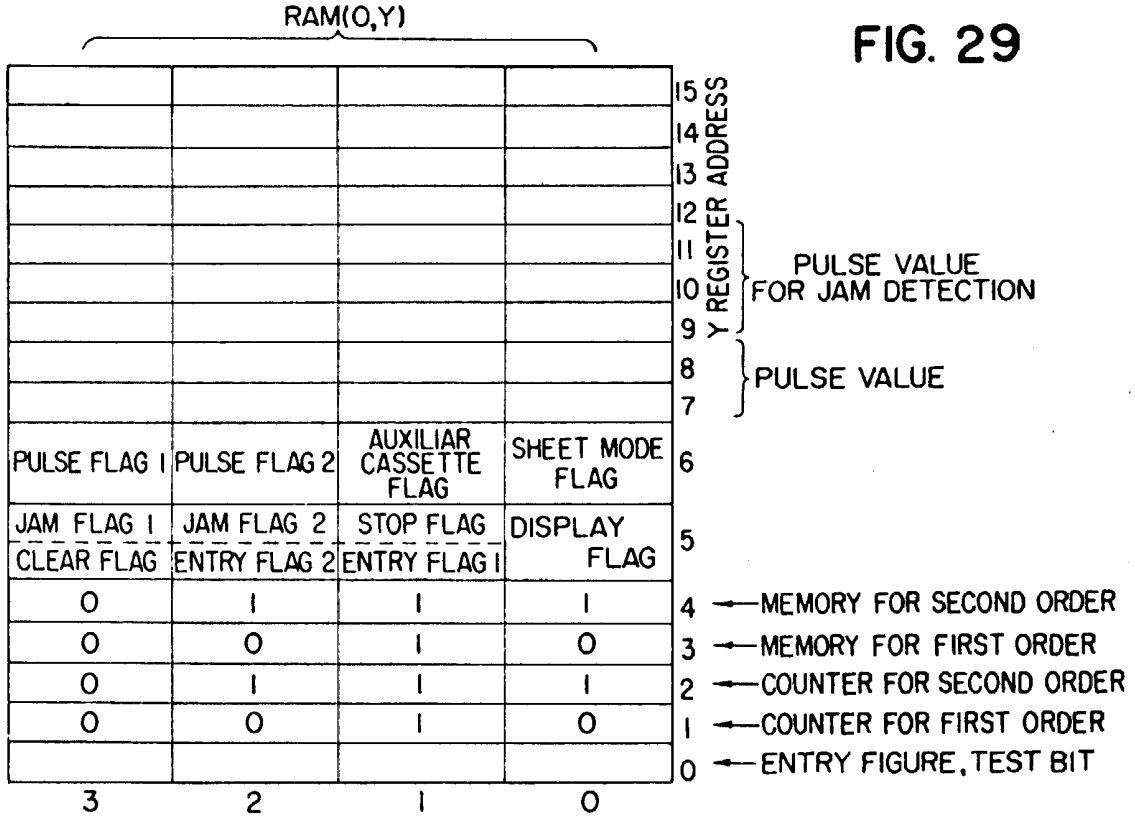
RAM(O,Y)
Y REGISTER ADDRESS
PULSE VALUE FOR JAM DETECTION
PULSE VALUE
PULSE FLAG 1
PULSE FLAG 2
AUXILIAR CASSETTE FLAG
SHEET MODE FLAG
JAM FLAG 1
JAM FLAG 2
STOP FLAG
DISPLAY FLAG
CLEAR FLAG
ENTRY FLAG 2
ENTRY FLAG 1
MEMORY FOR SECOND ORDER
MEMORY FOR FIRST ORDER
COUNTER FOR SECOND ORDER
COUNTER FOR FIRST ORDER
ENTRY FIGURE, TEST BIT
3
2
1
0

1603443 COMPLETE SPECIFICATION
55 SHEETS *This drawing is a reproduction of the Original on a reduced scale*
Sheet 32

FIG. 30A

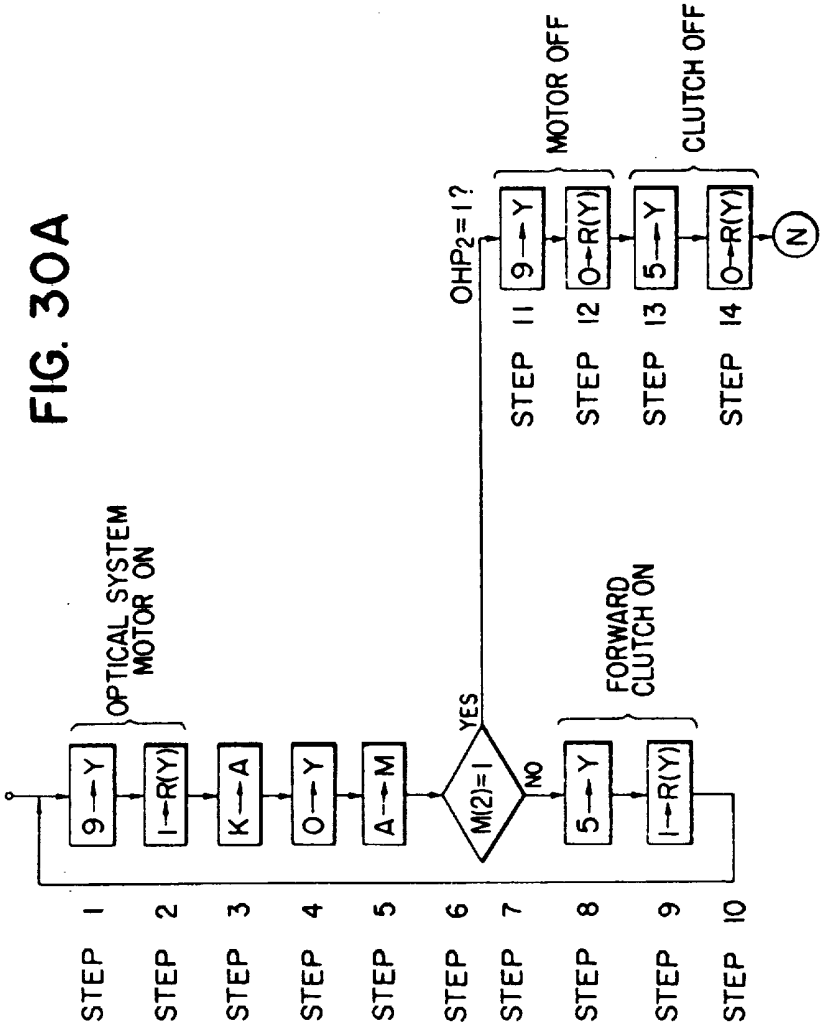

FIG. 30B

STEPS		INSTRUCTIONS
1	LB 1	TCY 9
2		SETR
3		TKA
4		TCY 0
5		TAM
6		TBITI 2
7		BR LB 2
8		TCY 5
9		SETR
10		BR LB 1
11	LB 2	TCY 9
12		RSTR
13		TCY 5
14		RSTR

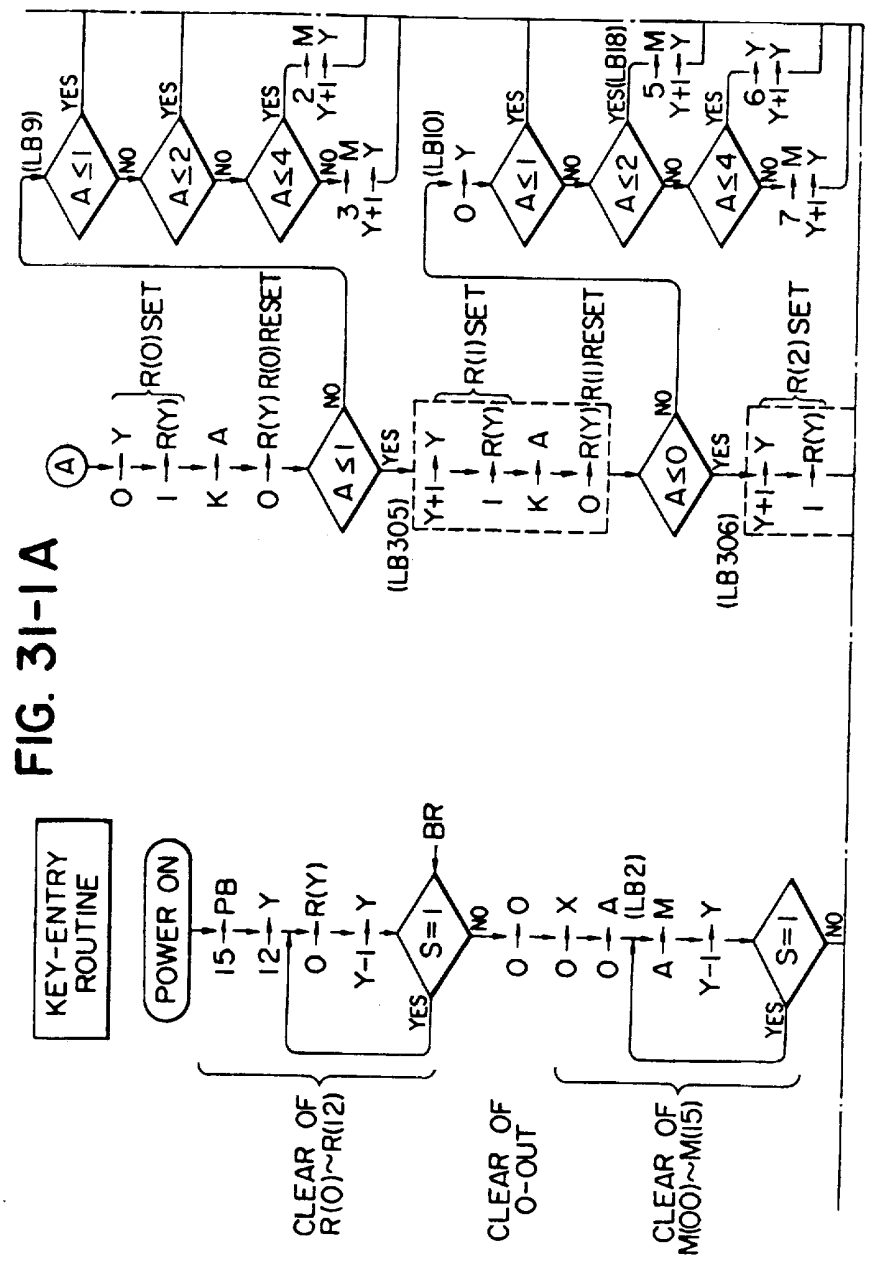
KEY-ENTRY ROUTINE
POWER ON
15 → PB
12 → Y
0 → R(Y)
Y-1 → Y
S=1
NO
YES
BR
CLEAR OF R(0)~R(12)
0 → 0
0 → X
0 → A
(LB2)
A → M
Y-1 → Y
S=1
NO
YES
CLEAR OF M(00)~M(15)
CLEAR OF 0-OUT
A
0 → Y
1 → R(Y)
K → A
0 → R(Y)
R(0)RESET
A≤1
NO
YES
R(0)SET
(LB305)
Y+1 → Y
1 → R(Y)
K → A
0 → R(Y)
R(1)RESET
A≤0
NO
YES
R(1)SET
(LB306)
Y+1 → Y
1 → R(Y)
R(2)SET
(LB9)
A≤1
NO
YES
3 → M
Y+1 → Y
A≤2
NO
YES
A≤4
NO
YES
2 → M
Y+1 → Y
(LB10)
0 → Y
A≤1
NO
YES
7 → M
Y+1 → Y
A≤2
NO
YES
A≤4
NO
YES
5 → M
Y+1 → Y
(LB18)
6 → Y
Y+1 → Y

FIG. 31-1A

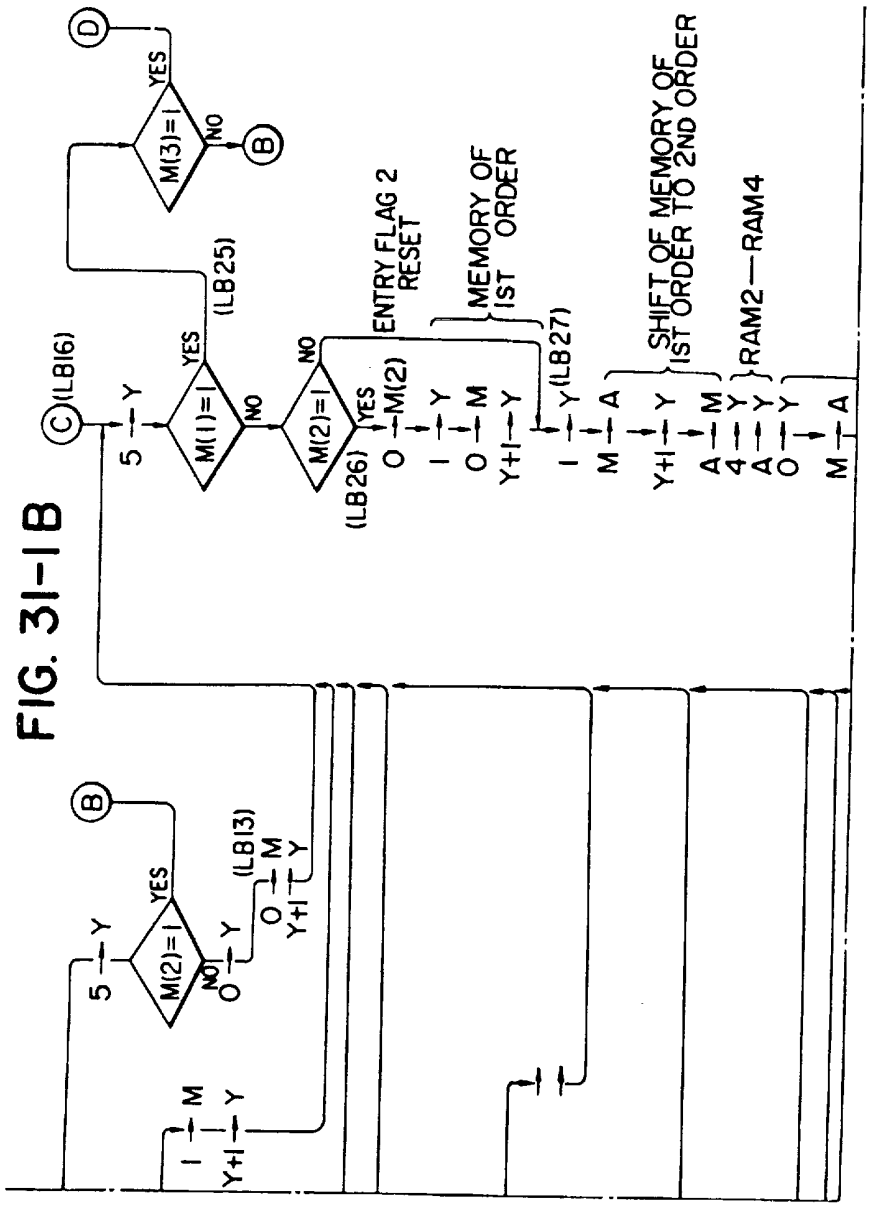
D
YES
M(3)=1
NO
B
(LB25)
C (LB16)
5 Y
YES
M(1)=1
NO
NO
M(2)=1
YES
ENTRY FLAG 2 RESET
M(2)
(LB26)
0 Y
1 M
0 Y
Y+1 Y
MEMORY OF 1ST ORDER
Y (LB27)
1 A
M A
SHIFT OF MEMORY OF 1ST ORDER TO 2ND ORDER
Y+1 Y
A M
4 Y
RAM2—RAM4
A Y
0 Y
M A
B
5 Y
YES
M(2)=1
NO
0 Y
(LB13)
0 M
Y+1 Y
1 M
Y+1 Y

FIG. 31-1B

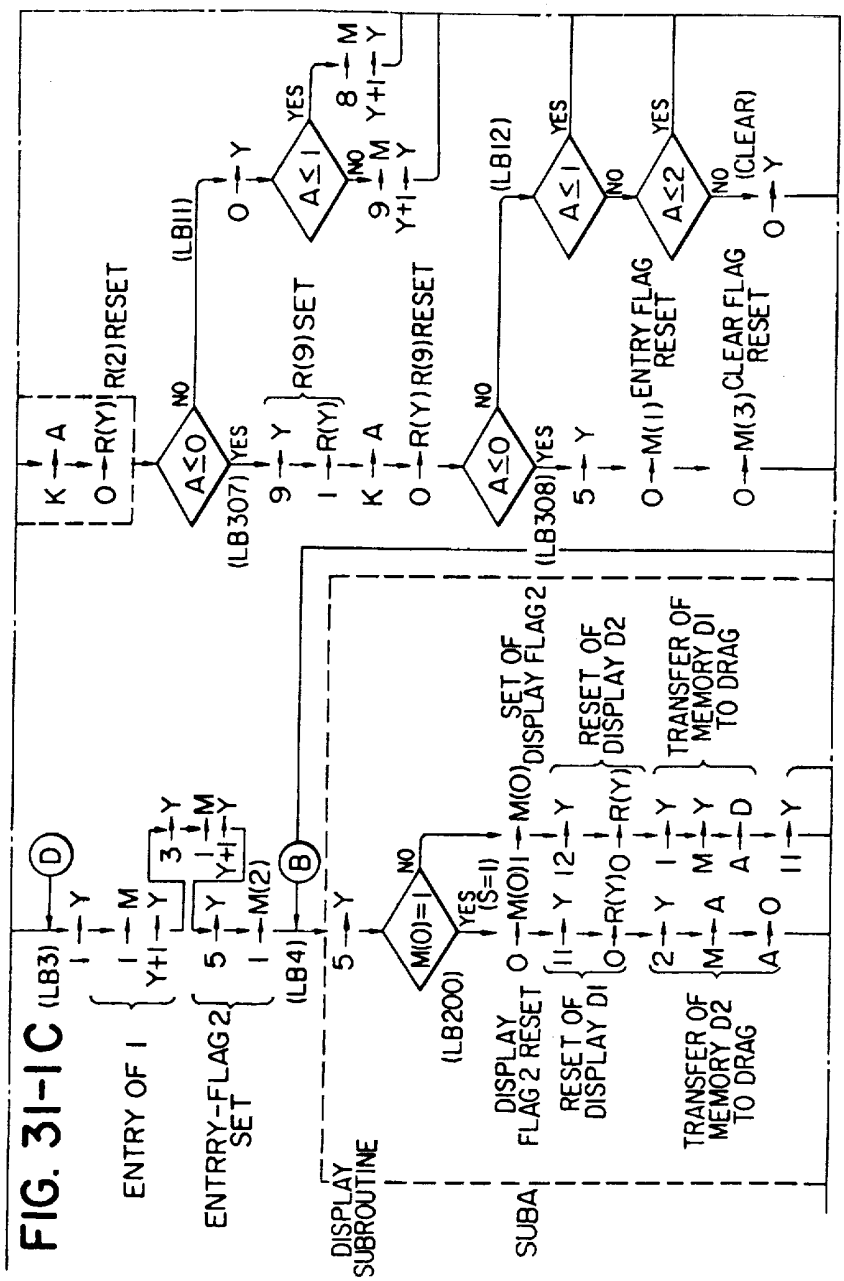
FIG. 31-IC
(LB3)
ENTRY OF I
ENTRRY-FLAG 2 SET
(LB4)
DISPLAY SUBROUTINE
SUBA
(LB200)
DISPLAY FLAG 2 RESET
RESET OF DISPLAY DI
TRANSFER OF MEMORY D2 TO DRAG
M(0)=1
YES (S=1)
NO
SET OF DISPLAY FLAG2
RESET OF DISPLAY D2
TRANSFER OF MEMORY DI TO DRAG
(LB307)
A≤0
R(2) RESET
R(9) SET
R(9) RESET
(LB11)
A≤1
(LB308)
(LB12)
ENTRY FLAG RESET
A≤2
CLEAR FLAG RESET
(CLEAR)

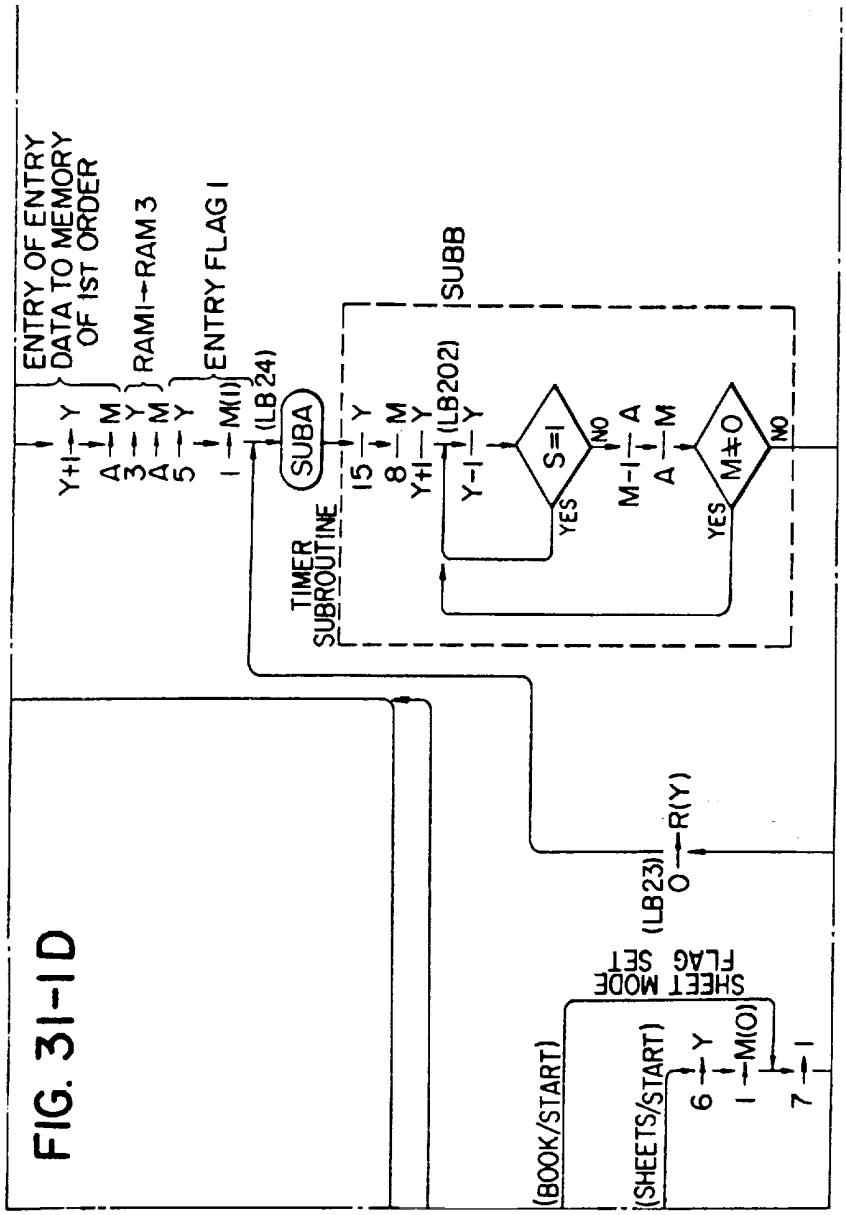
ENTRY OF ENTRY DATA TO MEMORY OF 1ST ORDER
RAMI→RAM3
ENTRY FLAG 1
Y+1 → Y
A → M
3 → Y
A → M
5 → Y
1 → M(1)
(LB24)
SUBA
TIMER SUBROUTINE
SUBB
15 → Y
8 → M
Y+1 → Y
(LB202)
Y-1 → Y
S=1
NO
YES
M-1 → A
A → M
M≠0
NO
YES
(LB23)
0 → R(Y)
(BOOK/START)
(SHEETS/START)
SHEET MODE FLAG SET
6 → Y
1 → M(0)
7 → 1

FIG. 31-1D

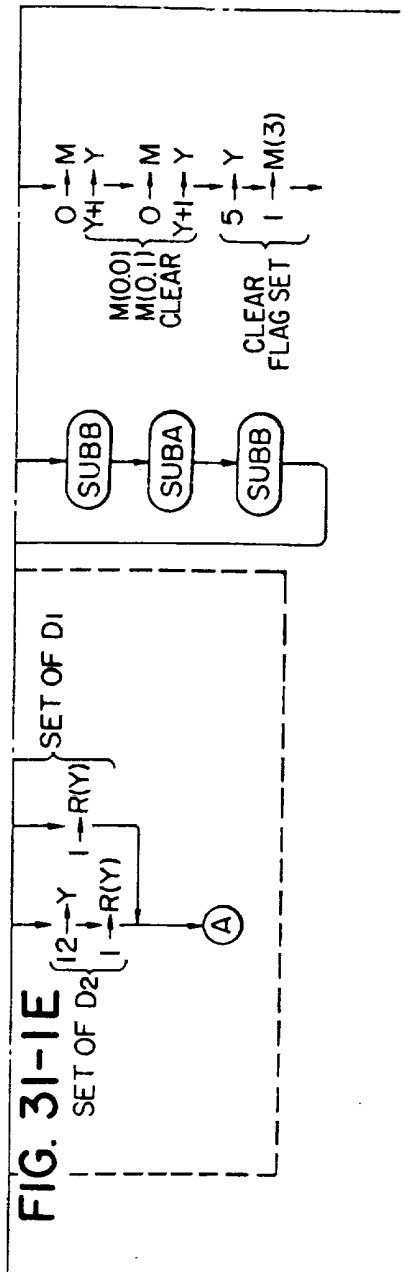
SET OF D1
SET OF D2
12 → Y
1 → R(Y)
1 → R(Y)
A
SUBB
SUBA
SUBB
M(0,0) M(0,1) CLEAR
0 → M
Y+1 → Y
CLEAR FLAG SET
5 → Y
1 → M(3)

FIG. 31-1E

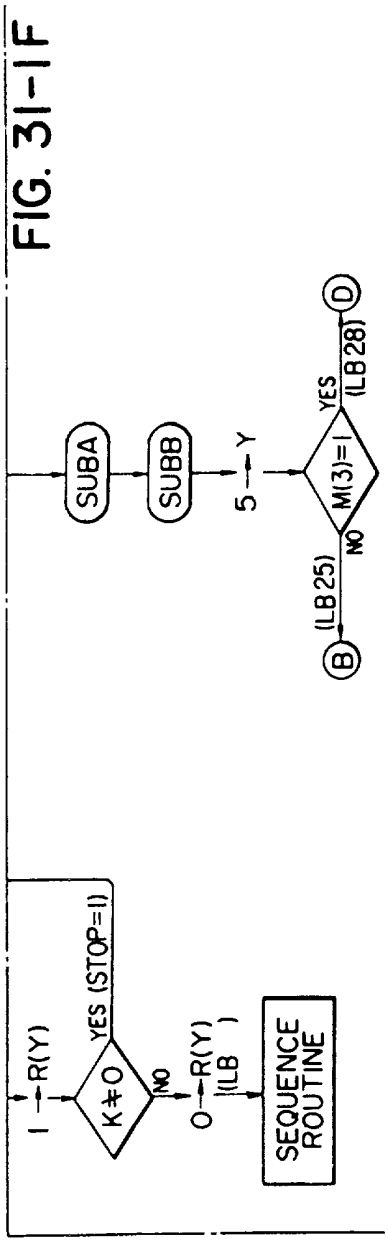

FIG. 31-1F

FIG. 31-1

FIG. 31-1A	FIG. 31-1B
FIG. 31-1C	FIG. 31-1D
FIG. 31-1E	FIG. 31-1F

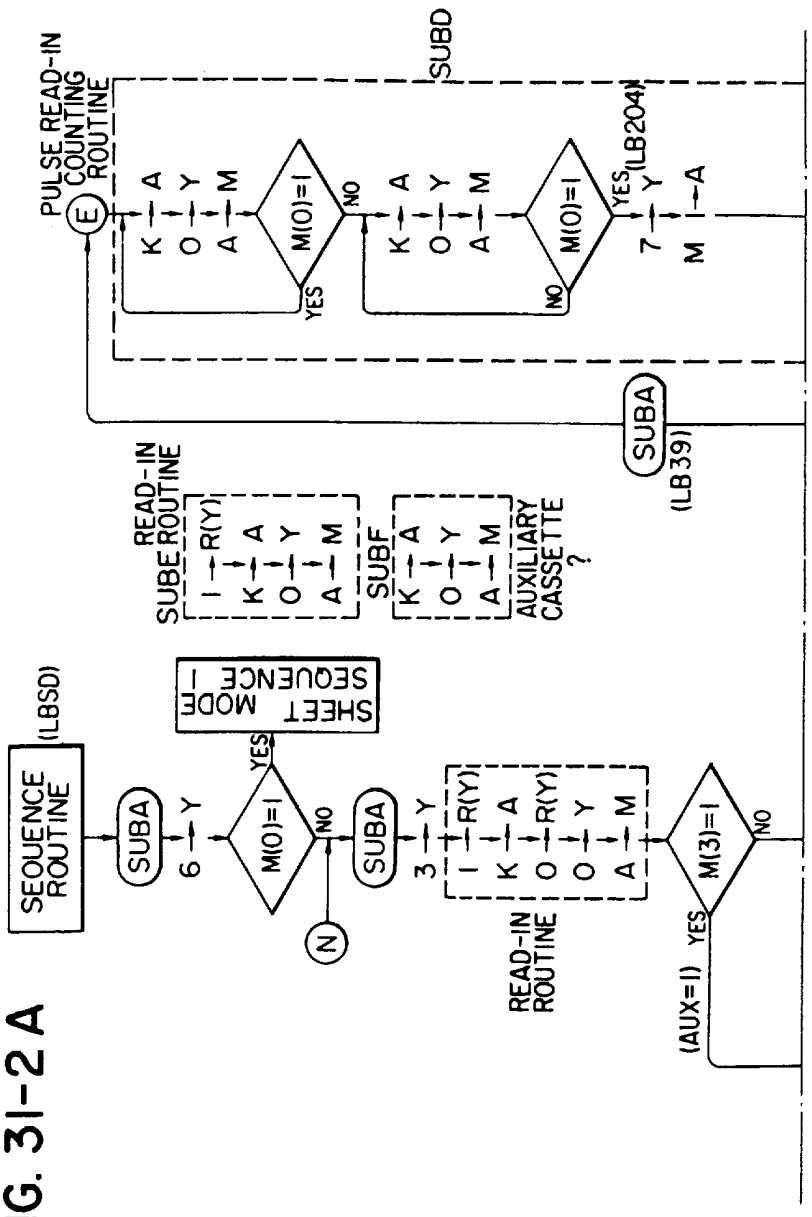
SUBD
PULSE READ-IN COUNTING ROUTINE
E
K A
O Y
A M
M(0)=1
NO
YES
(LB204)
7 Y
M A
SUBA
(LB39)
READ-IN SUBE ROUTINE
I R(Y)
K A
O Y
A M
SUBF
AUXILIARY CASSETTE ?
(LBSD)
SEQUENCE ROUTINE
SUBA
6 Y
SHEET MODE SEQUENCE 1
N
SUBA
3 Y
READ-IN ROUTINE
M(3)=1
(AUX=1)

FIG. 31-2A

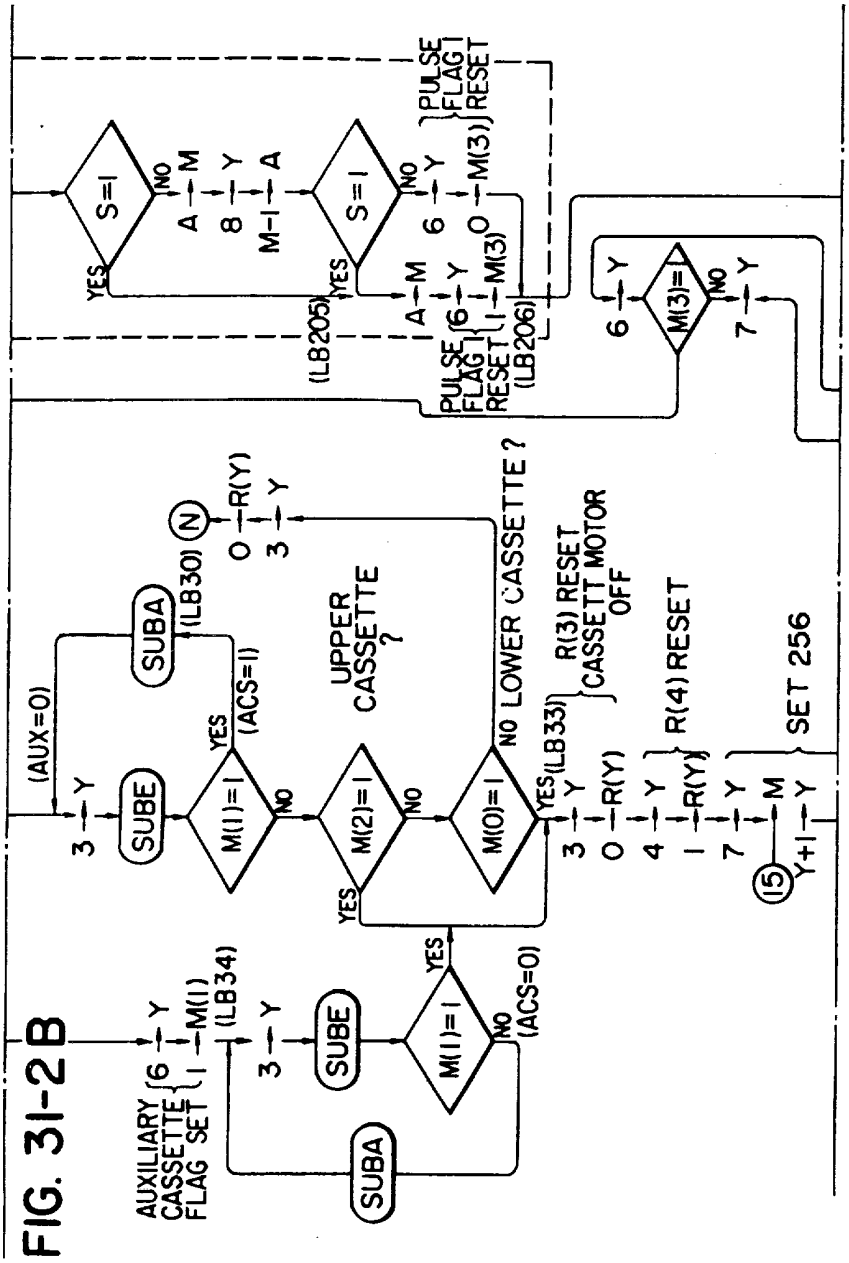
S=1
NO
YES
A M
8 Y
M-1 A
S=1
NO
YES
6 Y
0 M(3)
PULSE FLAG RESET
(LB205)
A M
6 Y
1 M(3)
PULSE FLAG RESET
(LB206)
6 Y
M(3)=
NO
7 Y
(AUX=0)
3 Y
SUBE
M(1)=1
YES
(ACS=1)
NO
SUBA
(LB30)
M(2)=1
NO
YES
M(0)=1
NO
YES
(LB33)
UPPER CASSETTE ?
NO LOWER CASSETTE ?
(N)
0 R(Y)
3 Y
3 Y
0 R(Y)
R(3) RESET CASSETT MOTOR OFF
4 Y
1 R(Y)
R(4) RESET
7 Y
M
Y+1 Y
(15)
SET 256
AUXILIARY CASSETTE FLAG SET
6 Y
1 M(1)
(LB34)
3 Y
SUBE
M(1)=1
YES
NO
(ACS=0)
SUBA

FIG. 31-2B

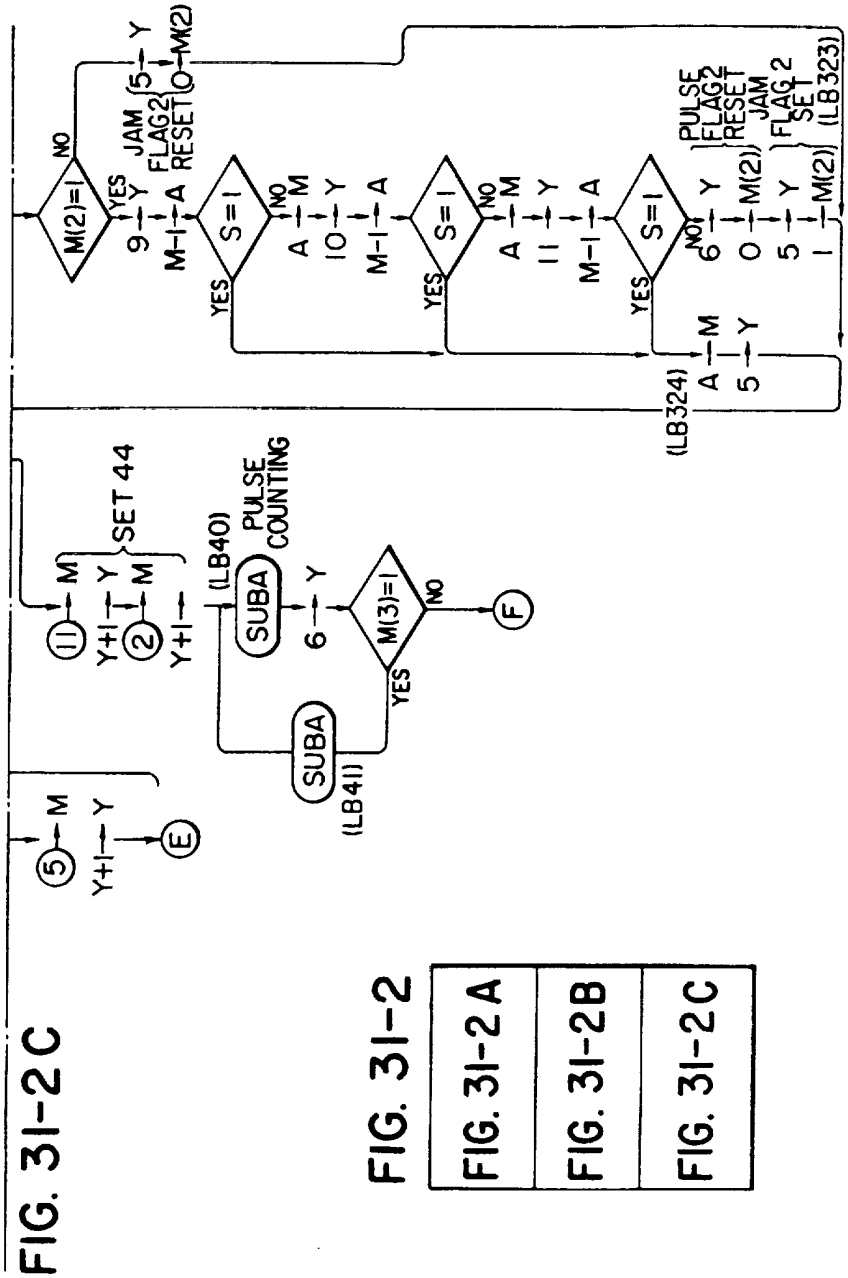

FIG. 31-2C

FIG. 31-2

FIG. 31-2A	
FIG. 31-2B	
FIG. 31-2C	

FIG. 31-3A

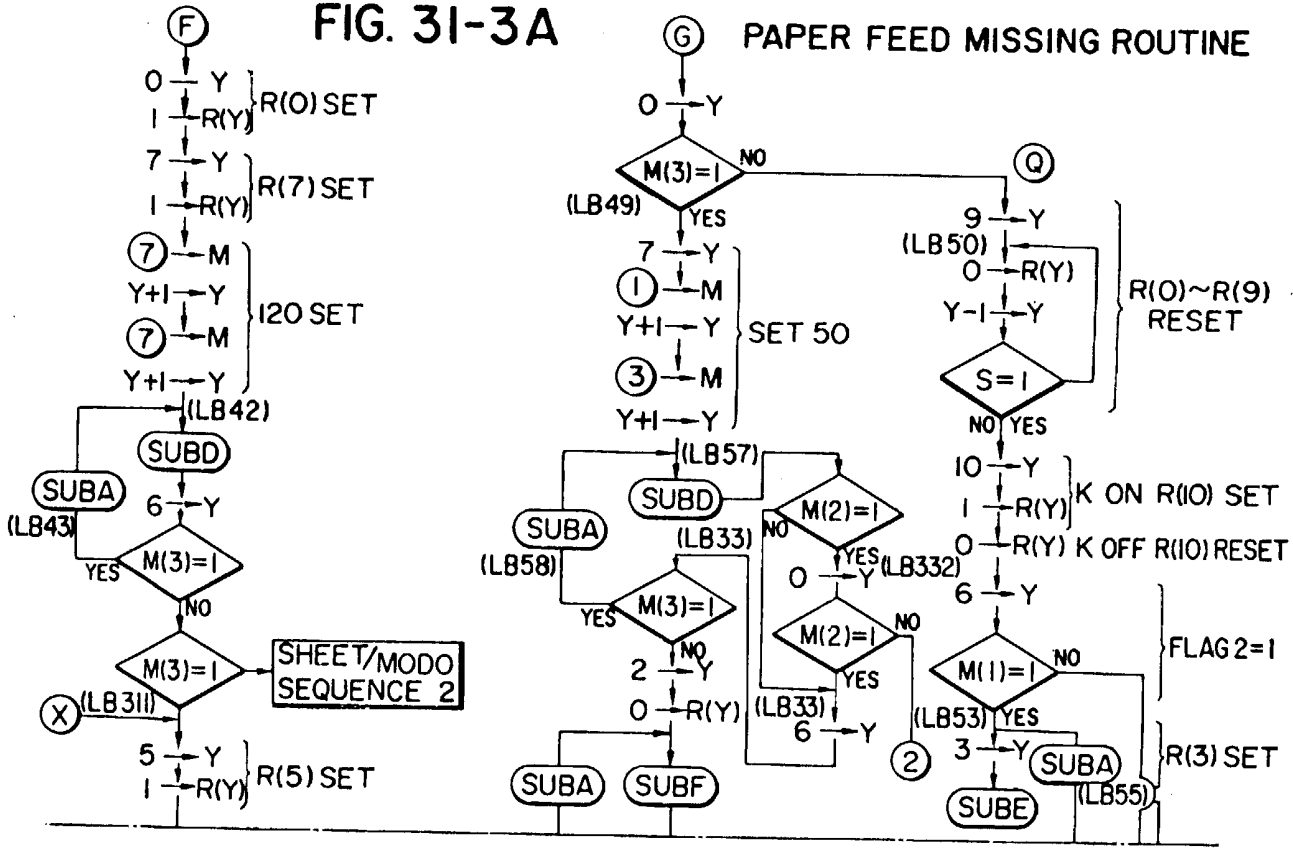
PAPER FEED MISSING ROUTINE
F
0 → Y
1 → R(Y)
R(0) SET
7 → Y
1 → R(Y)
R(7) SET
7 → M
Y+1 → Y
7 → M
Y+1 → Y
120 SET
(LB42)
SUBD
SUBA
(LB43)
6 → Y
M(3)=1
YES
NO
M(3)=1
SHEET/MODO SEQUENCE 2
X
(LB311)
5 → Y
1 → R(Y)
R(5) SET
G
0 → Y
M(3)=1
NO
(LB49)
YES
7 → Y
1 → M
Y+1 → Y
3 → M
Y+1 → Y
SET 50
(LB57)
SUBD
SUBA
(LB58)
M(2)=1
NO
YES
(LB33)
(LB332)
0 → Y
M(3)=1
YES
NO
2 → Y
0 → R(Y)
M(2)=1
NO
YES
(LB33)
6 → Y
2
SUBA
SUBF
Q
9 → Y
(LB50)
0 → R(Y)
Y-1 → Y
S=1
NO
YES
R(0)~R(9) RESET
10 → Y
1 → R(Y)
K ON R(10) SET
0 → R(Y)
K OFF R(10) RESET
6 → Y
M(1)=1
NO
YES
(LB53)
FLAG 2=1
3 → Y
SUBA
(LB55)
SUBE
R(3) SET

FIG. 31-3B
FIG. 31-3
FIG. 31-3A
FIG. 31-3B
FIG. 31-3C
R(2) SET
R(7) SET
SET 6
NUMBER OF JAM PULSES EQUAL TO PREDETERMINED?
TRANSFER PAPER BROUGHT ?
R(6) SET
PULSE FLAG 2 SET
R(2) SET
R(1) RESET
SET NUMBER OF JAM PULSES TO 300
R(3) RESET
ACS=1
M(1)=1
M(2)=1
M(3)=1
SUBA
SUBD
(LB45)
(LB46)
(LB54)
(LB61)
(LB65)
(LB87)
(LB326)
(LB327)
(LB671)

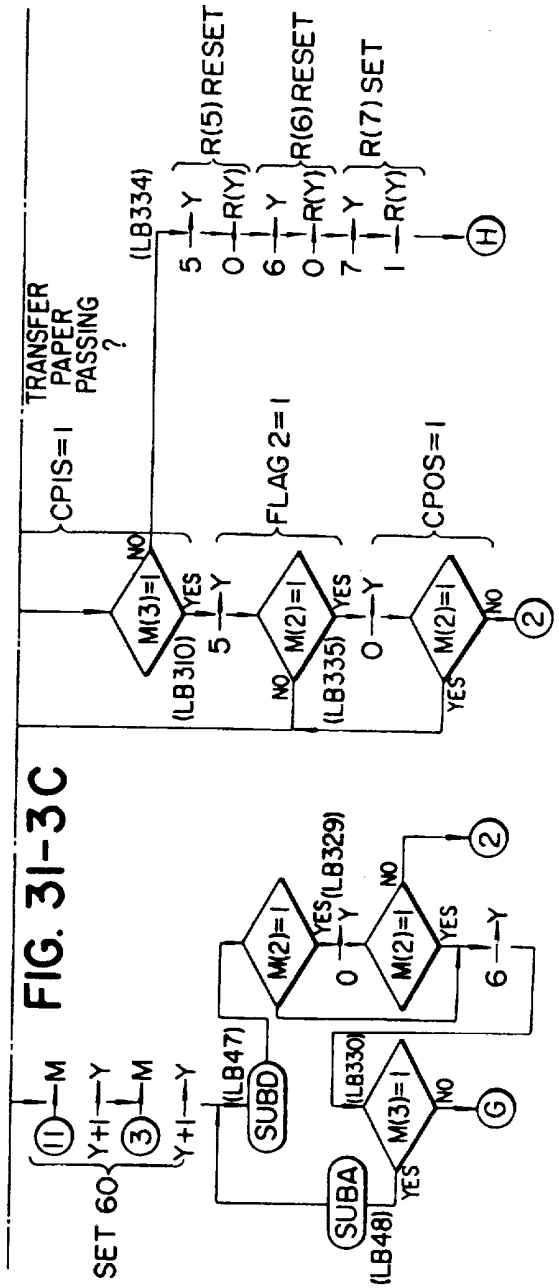
TRANSFER PAPER PASSING ?
CPIS=1
FLAG 2=1
CPOS=1
M(3)=1
(LB310)
M(2)=1
(LB335)
M(2)=1
(LB334)
R(5) RESET
R(6) RESET
R(7) SET
R(Y)
YES
NO
SET 60
SUBA
(LB481)
SUBD
(LB847)
M(3)=1
(LB330)
M(2)=1
(LB329)
M(2)=1

FIG. 31-3C

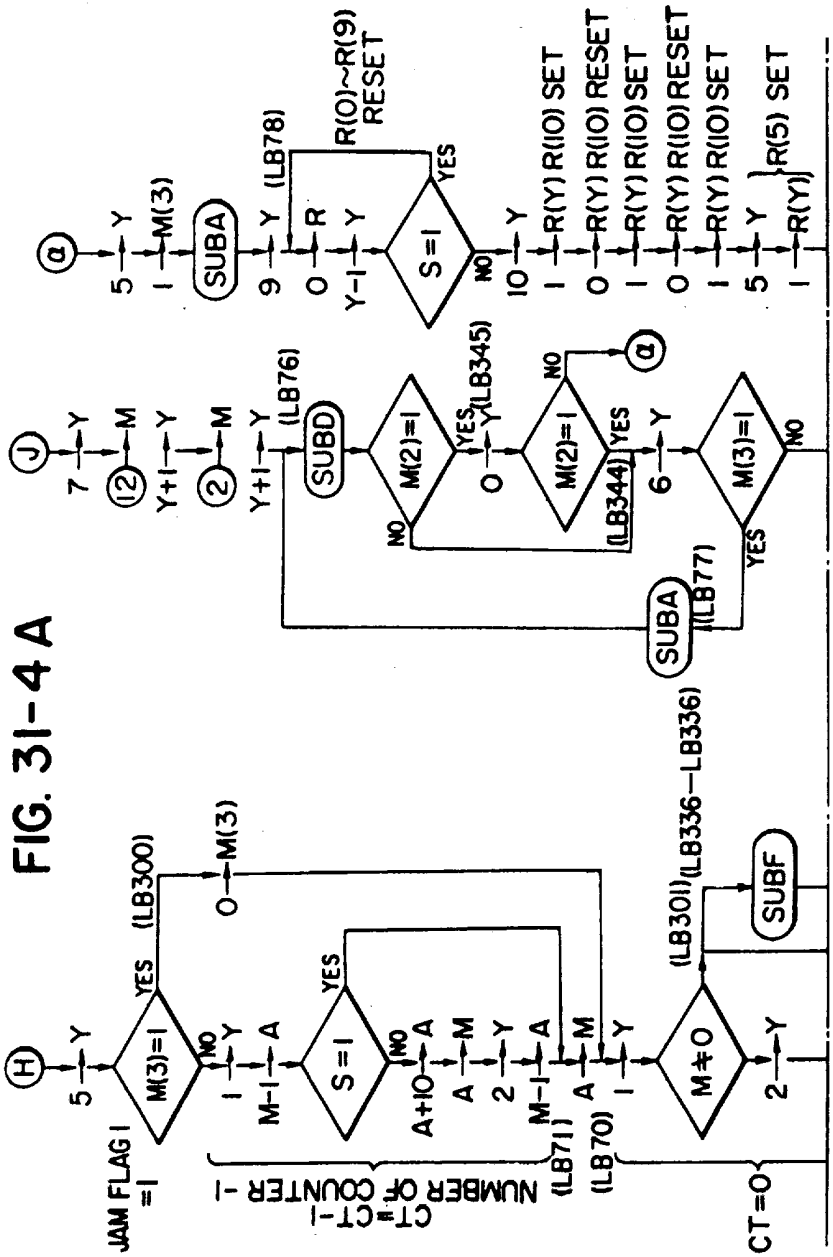
JAM FLAG 1 =1
M(3)=1
YES
NO
(LB300)
M(3)
CT=CT-1
NUMBER OF COUNTER -1
S=1
(LB71)
M≠0
(LB70)
(LB301)
(LB336-LB336)
SUBF
CT=0
SUBA
(LB77)
SUBD
M(2)=1
(LB345)
(LB344)
R(0)~R(9) RESET
R(Y) R(10) SET
R(Y) R(10) RESET
R(Y) R(5) SET
R(Y)

FIG. 31-4A

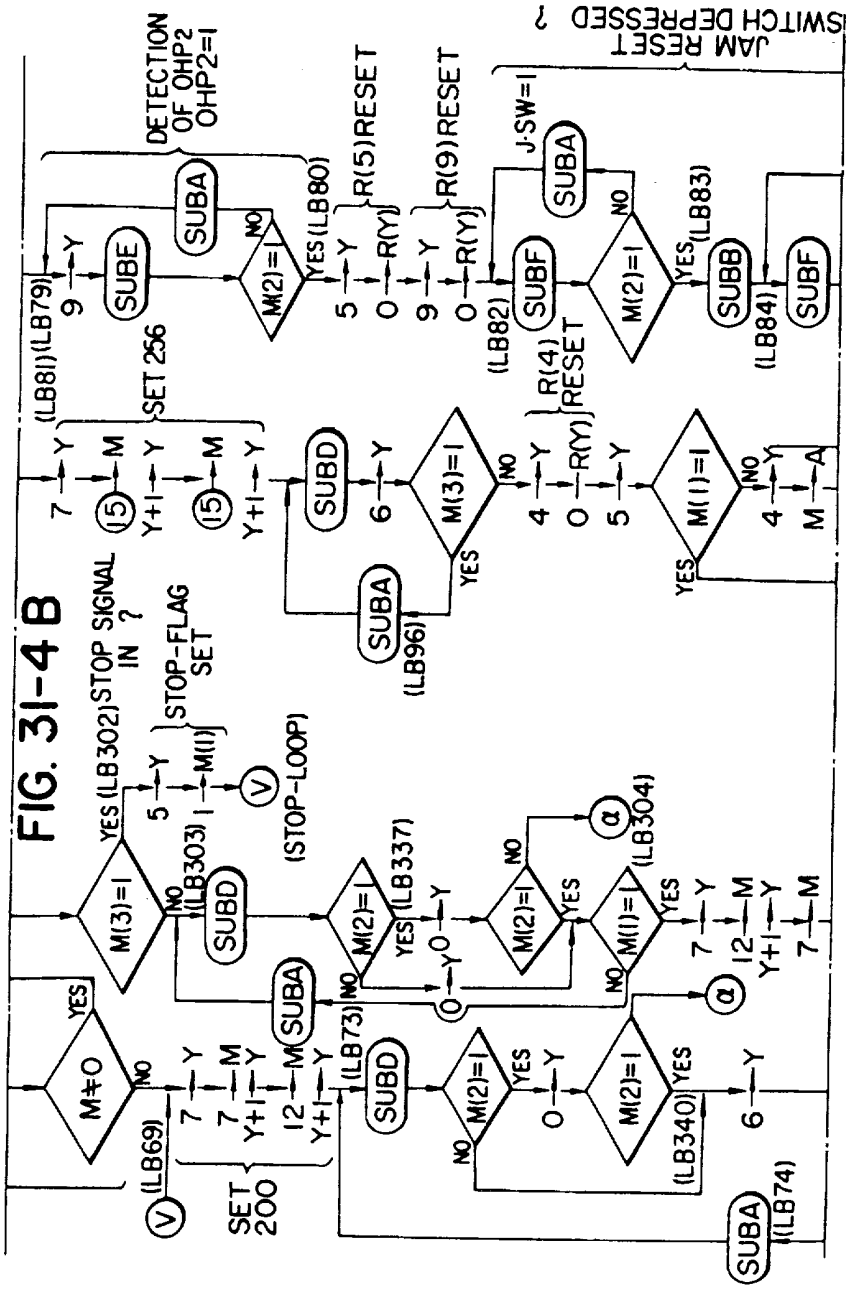
FIG. 31-4B
JAM RESET SWITCH DEPRESSED ?
DETECTION OF OHP2 OHP'2=1
SET 256
STOP SIGNAL IN ?
STOP-FLAG SET
SET 200
(STOP-LOOP)
(LB69)
(LB73)
(LB74)
(LB79)
(LB80)
(LB81)
(LB82)
(LB83)
(LB84)
(LB96)
(LB302)
(LB303)
(LB304)
(LB337)
(LB340)
M≠0
M(1)=1
M(2)=1
M(3)=1
SUBA
SUBB
SUBD
SUBE
SUBF
R(4) RESET
R(5) RESET
R(9) RESET
J-SW=1

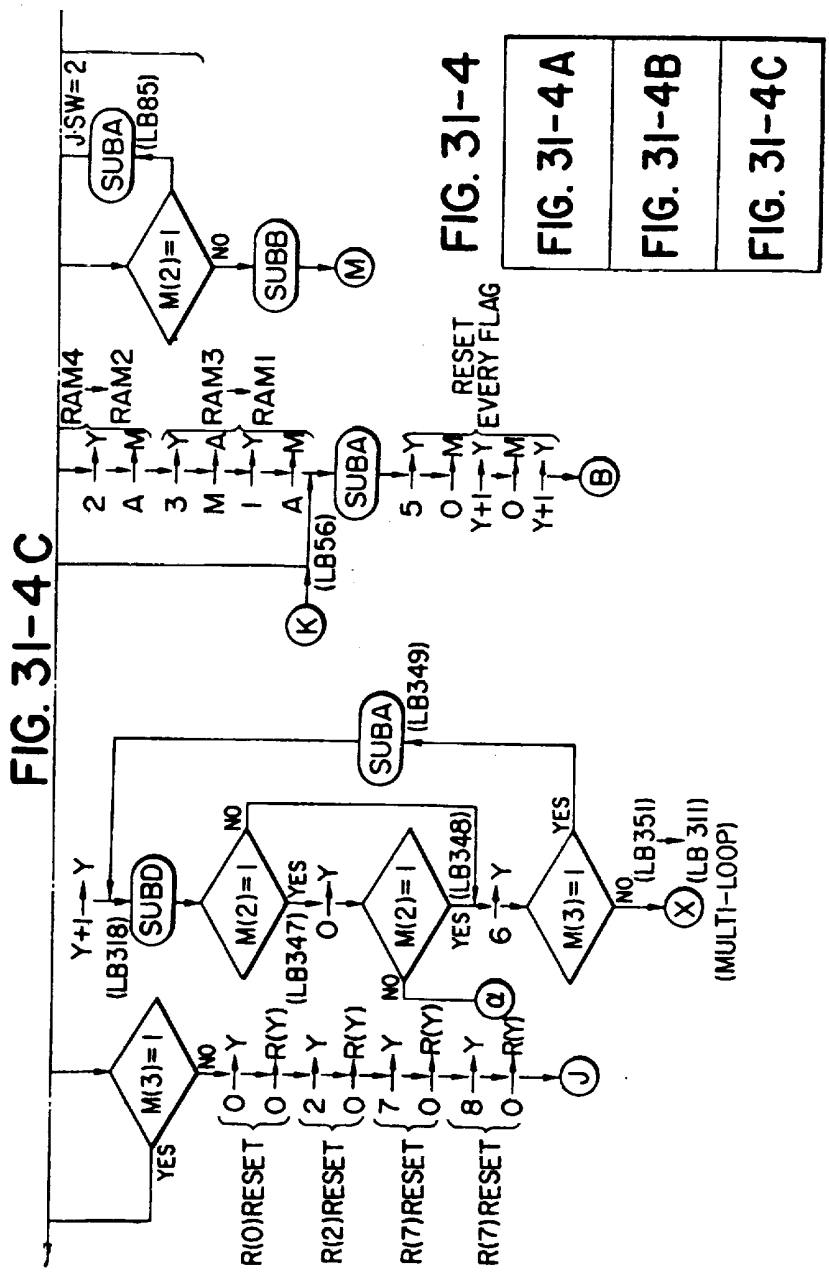

FIG. 31-4

FIG. 31-4A	
FIG. 31-4B	
FIG. 31-4C	

FIG. 31-5

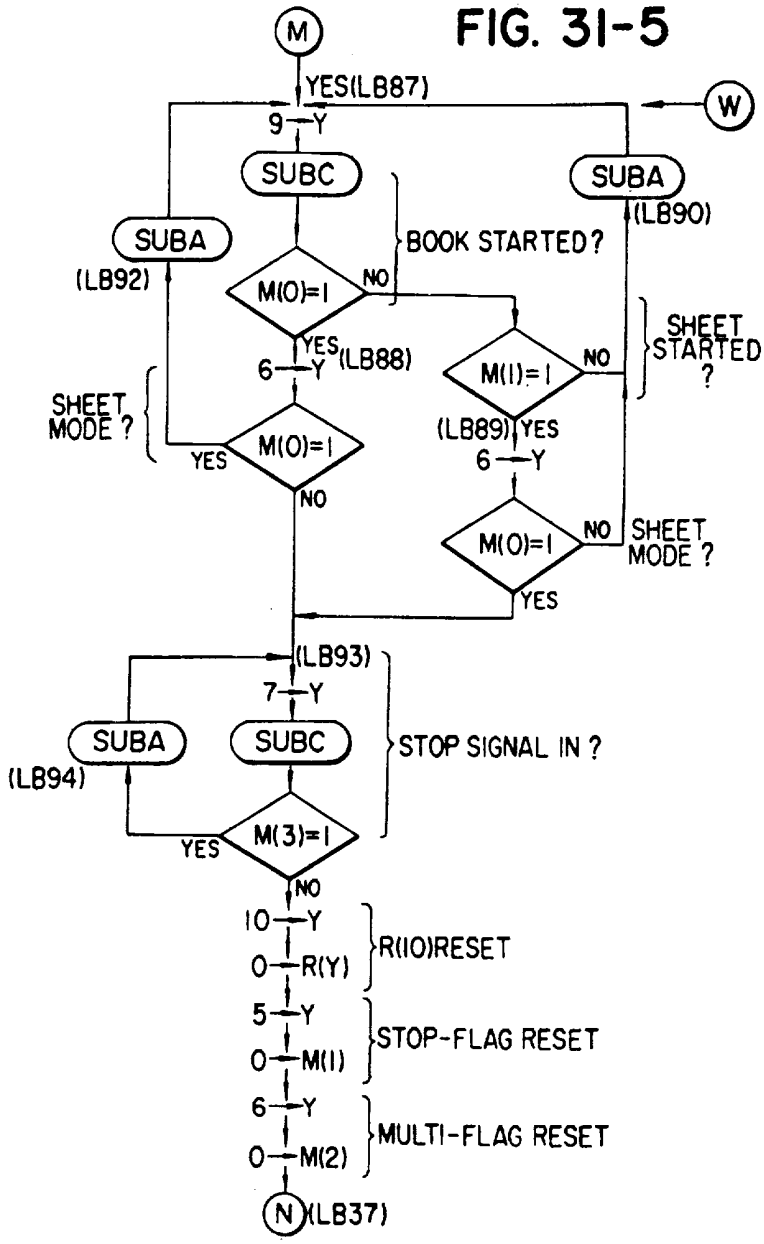
M
YES(LB87)
9—Y
W
SUBC
SUBA
(LB90)
SUBA
(LB92)
BOOK STARTED?
M(0)=1
NO
YES
6—Y
(LB88)
M(1)=1
NO
SHEET STARTED ?
SHEET MODE ?
M(0)=1
YES
(LB89)
YES
6—Y
NO
M(0)=1
NO
SHEET MODE ?
YES
(LB93)
7—Y
SUBA
(LB94)
SUBC
STOP SIGNAL IN ?
M(3)=1
YES
NO
10—Y
0—R(Y)
R(10)RESET
5—Y
0—M(1)
STOP-FLAG RESET
6—Y
0—M(2)
MULTI-FLAG RESET
N
(LB37)

FIG. 31-6 A

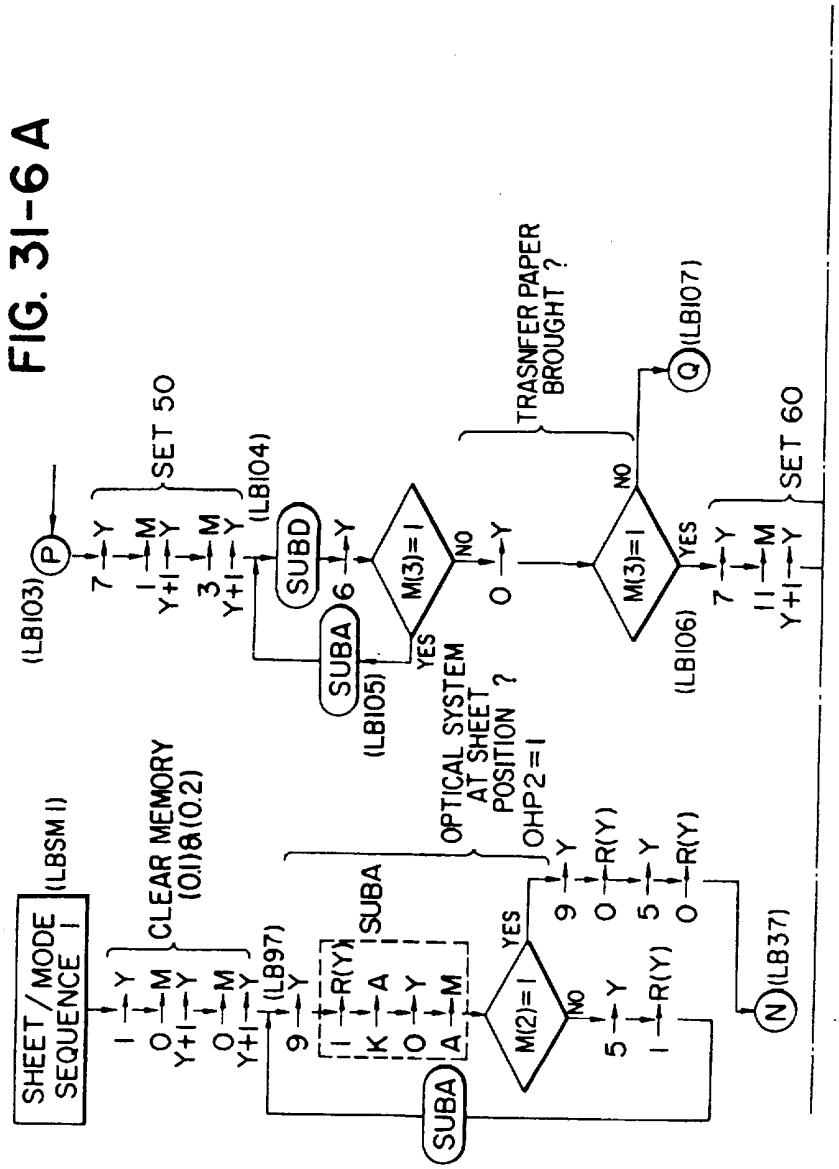
SHEET / MODE SEQUENCE 1
(LBSM1)
CLEAR MEMORY (0.1)&(0.2)
(LB97)
SUBA
M(2)=1
YES
NO
OPTICAL SYSTEM AT SHEET POSITION ?
OHP2=1
(LB37)
N
(LB103)
P
SET 50
(LB104)
SUBD
SUBA
(LB105)
M(3)=1
YES
NO
TRASNFER PAPER BROUGHT ?
Q
(LB107)
(LB106)
SET 60

FIG. 31-6B

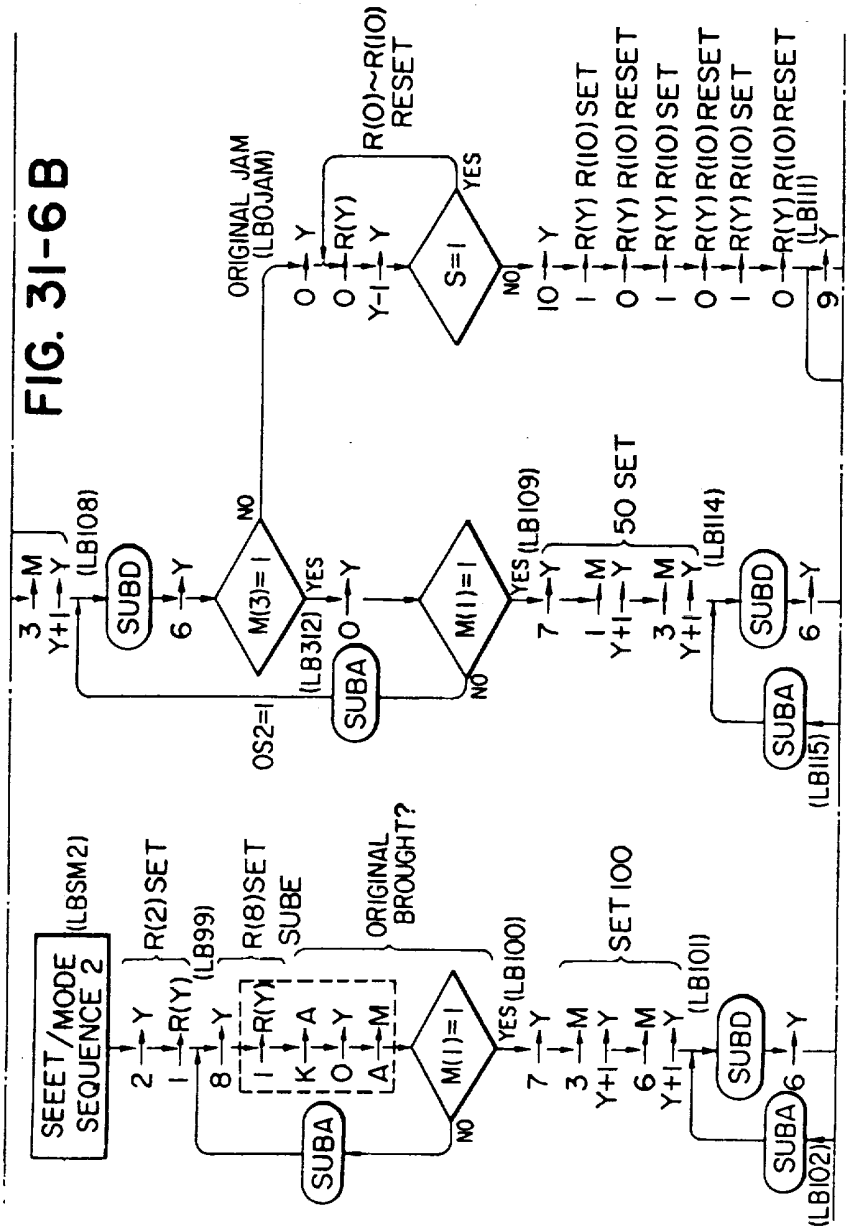
SEEET/MODE SEQUENCE 2
(LBSM2)
R(2) SET
R(8) SET
SUBE
ORIGINAL BROUGHT?
SET 100
SUBA
SUBD
M(1)=1
YES
NO
(LB100)
(LB101)
(LB102)
(LB99)
ORIGINAL JAM (LBOJAM)
R(0)~R(10) RESET
S=1
R(Y) R(10) SET
R(Y) R(10) RESET
50 SET
(LB108)
M(3)=1
(LB312)
OS2=1
(LB109)
(LB114)
(LB115)
(LB111)

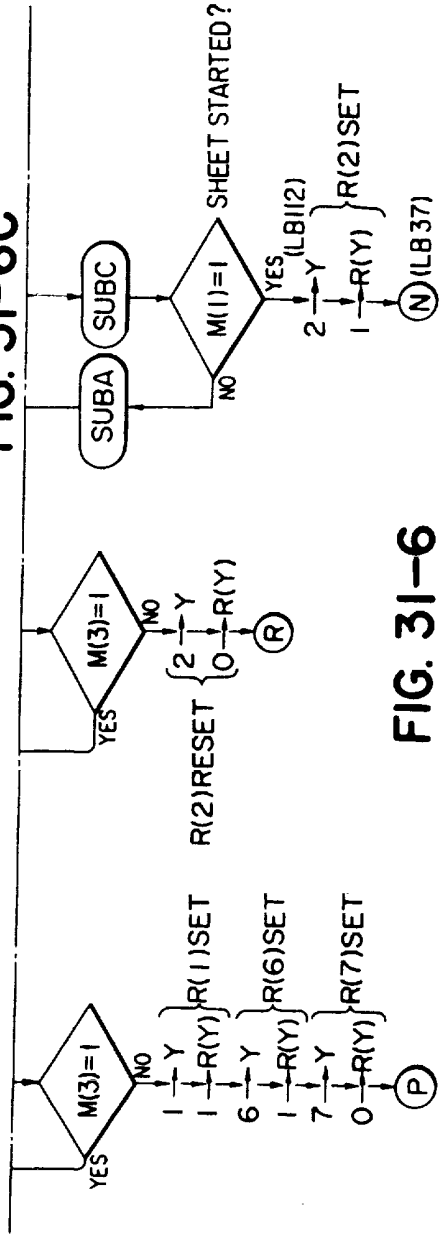

FIG. 31-6

FIG. 31-6 A	
FIG. 31-6B	
FIG. 31-6C	

FIG. 31-7A

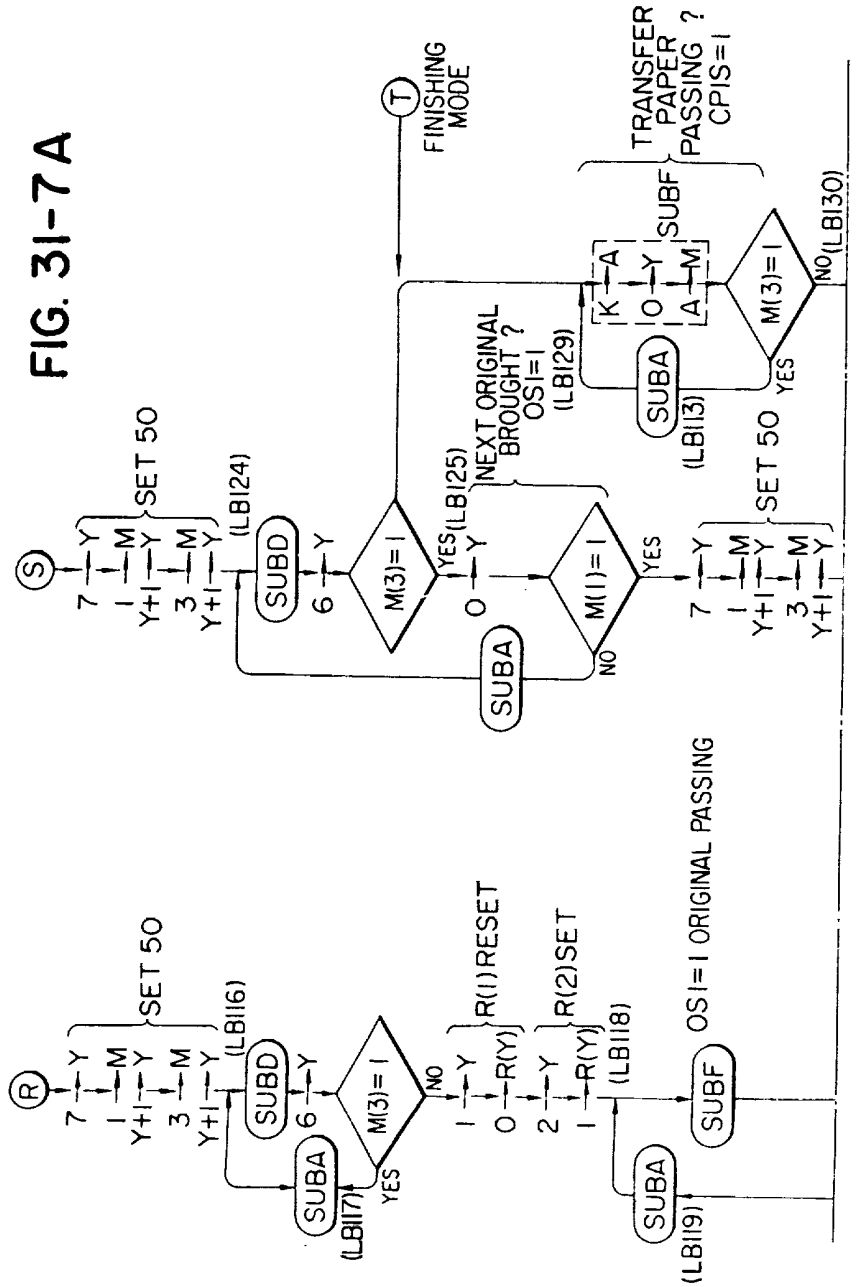
R
S
T
FINISHING MODE
SET 50
SUBD
SUBA
SUBF
M(3)=1
M(1)=1
YES
NO
(LB116)
(LB117)
(LB118)
(LB119)
(LB124)
(LB125)
(LB129)
(LB113)
(LB130)
R(1) RESET
R(2) SET
R(Y)
OS1=1 ORIGINAL PASSING
NEXT ORIGINAL BROUGHT ? OSI=1
TRANSFER PAPER PASSING ? CPIS=1

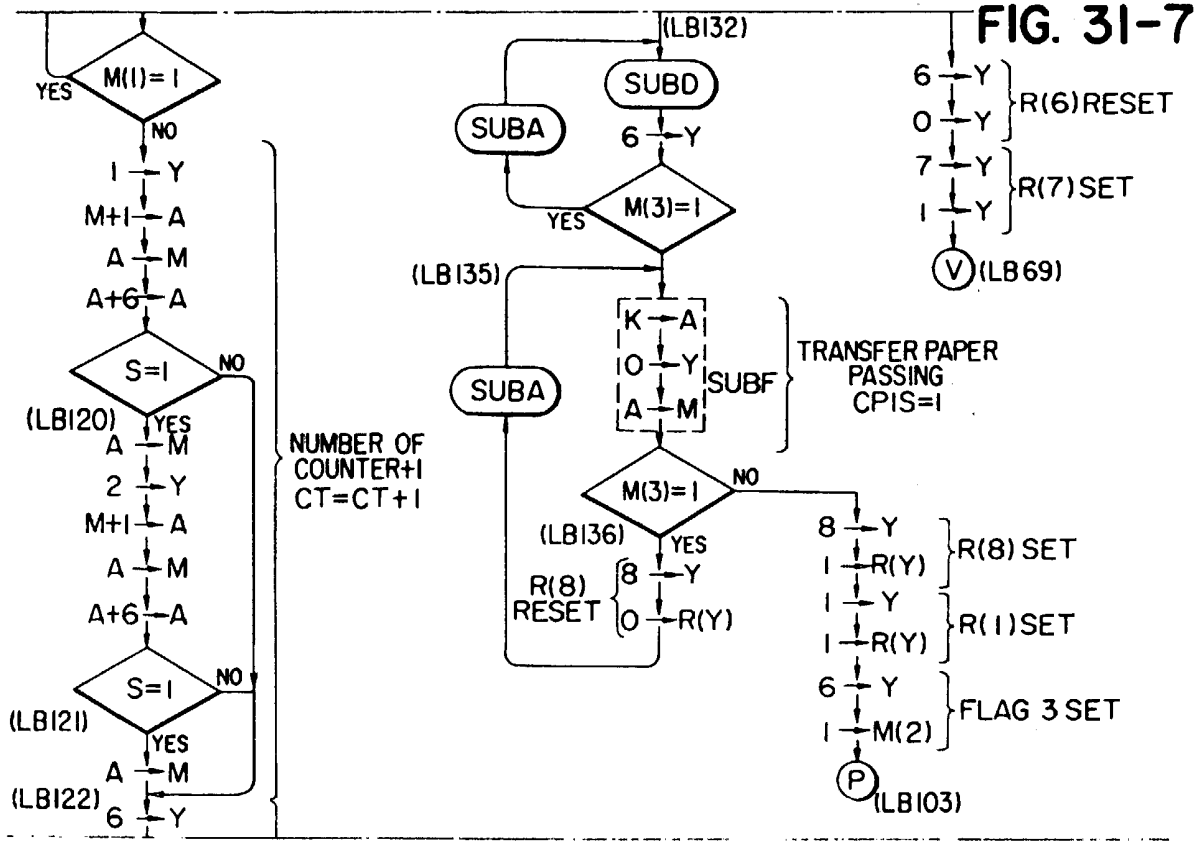
M(1)=1
YES
NO
1 → Y
M+1 → A
A → M
A+6 → A
S=1
NO
(LB120)
YES
A → M
2 → Y
M+1 → A
A → M
A+6 → A
S=1
NO
(LB121)
YES
A → M
(LB122)
6 → Y
NUMBER OF COUNTER+1
CT=CT+1
(LB132)
SUBD
6 → Y
SUBA
M(3)=1
YES
(LB135)
SUBA
K → A
10 → Y
A → M
SUBF
TRANSFER PAPER PASSING CPIS=1
M(3)=1
NO
(LB136)
YES
R(8) RESET
8 → Y
0 → R(Y)
8 → Y
1 → R(Y)
R(8) SET
1 → Y
1 → R(Y)
R(1) SET
6 → Y
1 → M(2)
FLAG 3 SET
(P)
(LB103)
6 → Y
0 → Y
R(6) RESET
7 → Y
1 → Y
R(7) SET
(V)
(LB69)

FIG. 31-7B

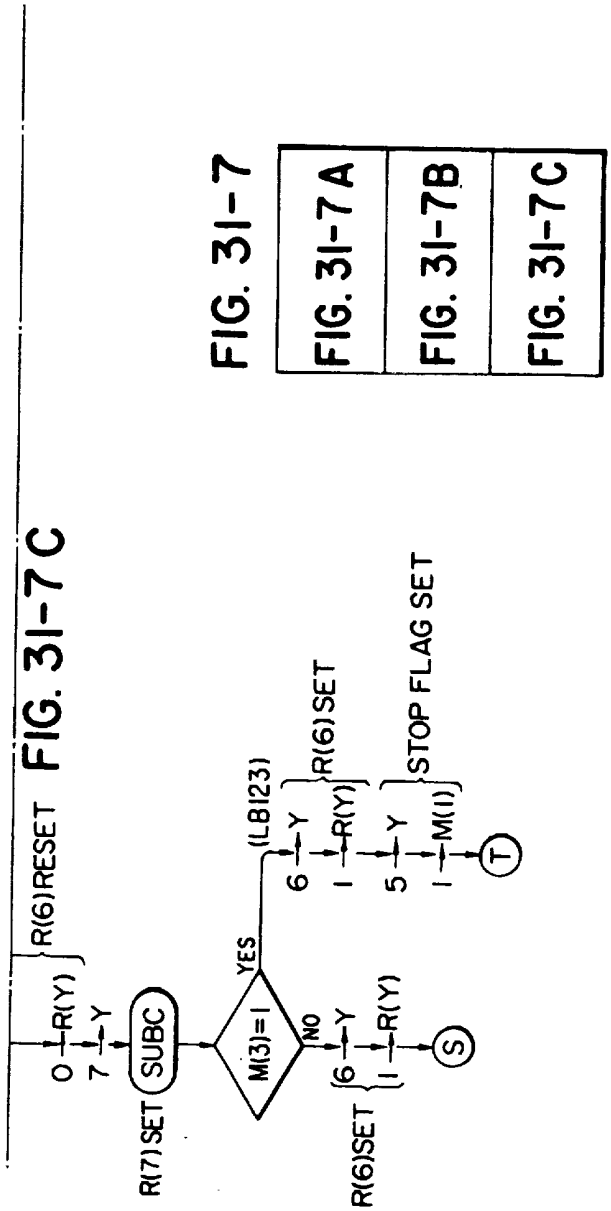

FIG. 31-7

FIG. 31-7A	
FIG. 31-7B	
FIG. 31-7C	