I. C. HAVENS.

VALVE.

APPLICATION FILED FEB. 7, 1919.

1,360,396. **Patented Nov. 30, 1920.**

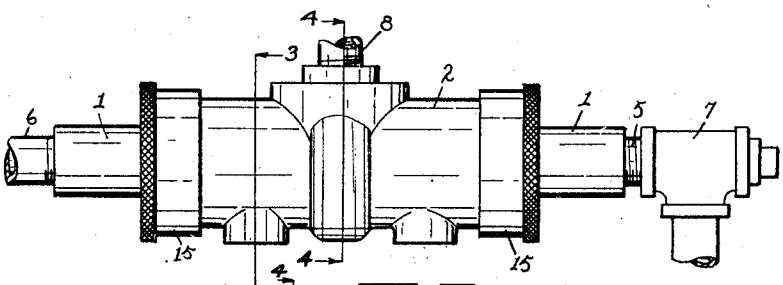

FIG. I.

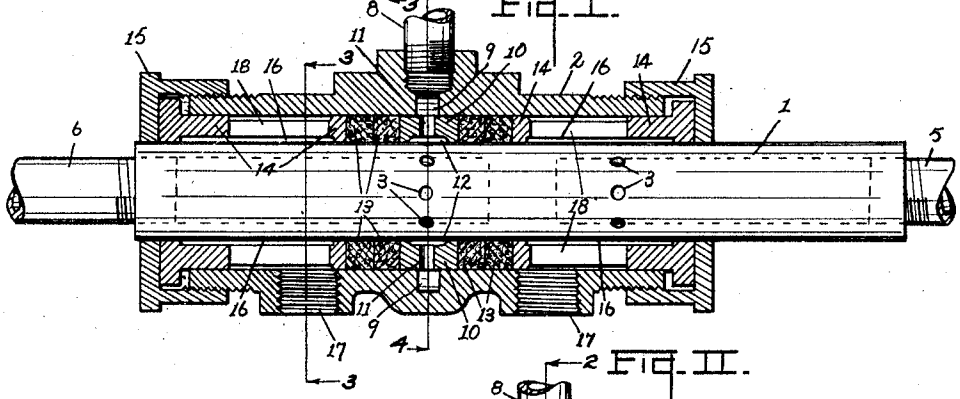

FIG. II.

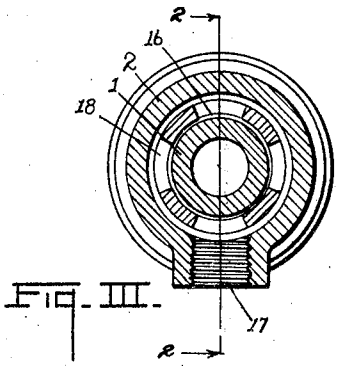

FIG. III.

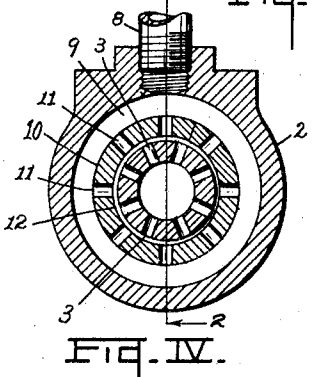

FIG. IV.

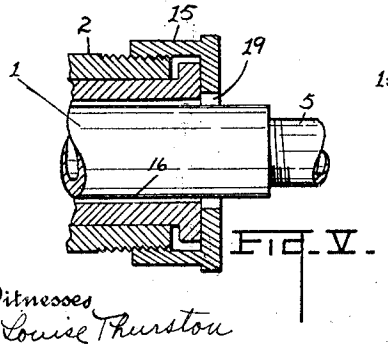

FIG. V.

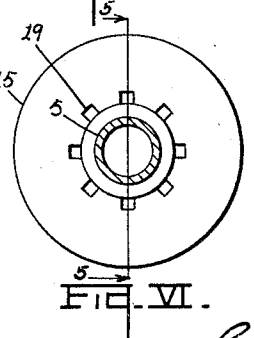

FIG. VI.

Witnesses
M. Louise Thurston
Kenn Gilman

Inventor
IRA C. HAVENS

By Chappell & Earl

Attorneys

UNITED STATES PATENT OFFICE.

IRA C. HAVENS, OF KALAMAZOO, MICHIGAN.

VALVE.

1,360,396. Specification of Letters Patent. Patented Nov. 30, 1920.

Application filed February 7, 1919. Serial No. 275,551.

To all whom it may concern:

Be it known that I, IRA C. HAVENS, a citizen of the United States, residing at the city and county of Kalamazoo, State of Michigan, have invented certain new and useful Improvements in Valves, of which the following is a specification.

This invention relates to improvements in valves.

My improved valve is especially designed by me for use as a control valve for auxiliary propellers for motor vehicles such as illustrated in my application for Letters Patent filed Feb. 11, 1918, Ser. No. 216,500, my present application being a continuation in part of such application.

My improved valve is however adapted and desirable for use in various other relations.

The main objects of this invention are:

First, to provide an improved valve adapted for controlling the opposed ends of a cylinder.

Second, to provide an improved double control valve which is simple and economical in its parts and one which is durable and not likely to get out of repair in use.

Further objects, and objects relating to structural details, will definitely appear from the detailed description to follow.

I accomplish the objects of my invention by the devices and means described in the following specification. The invention is clearly defined and pointed out in the claims.

A structure which is a preferred embodiment of my invention is clearly illustrated in the accompanying drawing, forming a part of this specification, in which:

Figure I is a side elevation of my improved valve, the supply and delivery connections being broken away.

Fig. II is a detail view mainly in longitudinal section on a line corresponding to line 2—2 of Figs. III and IV.

Fig. III is a transverse section on a line corresponding to line 3—3 of Figs. I and II.

Fig. IV is a transverse section on a line corresponding to line 4—4 of Figs. I and II.

Fig. V is a detail view partially in longitudinal section of a modified embodiment of my invention.

Fig. VI is an end elevation of the structure shown in Fig. V, the delivery connection being shown in section.

In the drawing similar reference characters refer to similar parts throughout the several views, and the sectional views are taken looking in the direction of the little arrows at the ends of the section lines.

Referring to the drawing, in the embodiment of my invention illustrated I provide an inner member 1 and an outer member or casing 2, both of cylindrical form. The inner member 1 has spaced ports 3 separated by a partition 4, indicated by the dotted lines in Fig. II. The delivery connections 5 and 6 are shown conventionally, the same being threaded into the ends of the member 1.

In Fig. I the delivery connection 5 is shown as provided with a coupling 7. The outer member 2 has a supply or inlet pipe 8 connected thereto and is provided with an annular channel or inlet passage 9 communicating with this inlet pipe as shown in Figs. II and IV. An annular inlet member 10 is disposed within the outer member 2 to embrace the member 1. This inlet member 10 has ports 11 connecting the annular inlet passage 9 with the annular passage 12 of the member 10. At each side of this inlet member 10 are packings 13 retained by the glands 14 and their caps 15 which are threaded for adjustment upon the ends of the member 2.

At each side of these packings the outer member 2 constitutes exhaust chambers 16 which, in the embodiment shown in Figs. II—III are provided with exhaust ports 17 adapted to receive suitable exhaust pipes. The glands 14 are provided with openings 18 communicating with these exhaust ports and are counterbored and also provided with clearance on their peripheries so that there is a free opening for the exhaust. The valve members are associated for relative longitudinal movement, it being immaterial which member is the movable member, so that the ports 3 may alternately be brought into communication with the inlet and into exhausting position, thereby alternately delivering air under pressure, for ex-

ample, through the connections 5 and 6, and alternately exhausting the same, thereby specially adapting the valve as a means for controlling a cylinder such as is shown in my said application.

In the modification shown in Fig. V the exhaust is through the outer ends of the glands, the exhaust ports to the outer casing being omitted. The gland cap in this modification has openings 19 therein as clearly shown in the drawing.

My improved valve is well adapted for handling air or the like under high pressures and is durable and not likely to get out of repair.

I have illustrated and described my improvements in an embodiment which I have found practical. I have not attempted to illustrate or describe other adaptations or embodiments as I believe the disclosures made will enable those skilled in the art to adapt my invention as may be desired for the particular uses to which the valves may be put.

Having thus described my invention, what I claim as new and desire to secure by Letters Patent, is:

1. In a valve, the combination of an inner member having a partition with ports at each side of the partition and delivery connections at its ends, an outer member having an inlet connection and an internal annular inlet passage open thereto, an annular inlet member disposed in said outer member and having an internal annular delivery passage communicating with said inlet passage, packings disposed at each side of said inlet member, said outer member at the outer sides of said packings constituting exhaust chambers and having exhaust ports therefor, and packing glands arranged in the ends of said outer member coacting with said packings, said glands being open to said exhaust, said valve members being movably associated so that the ports of the inner member may be alternately brought into communication with said inlet and exhausts.

2. In a valve, the combination of an inner member having a partition with ports at each side of the partition and delivery connections at its ends, an outer member having an inlet connection and an internal annular inlet passage open thereto, an annular inlet member disposed in said outer member and having an internal annular delivery passage communicating with said inlet passage, packings disposed at each side of said inlet member, said outer member at the outer sides of said packings constituting exhaust chambers, and packing glands arranged in the ends of said outer member coacting with said packings, said valve members being movably associated so that the ports of the inner member may be alternately brought into communication with said inlet and exhausts.

3. In a valve, the combination of an inner member having a partition with ports at each side of the partition and delivery connections at its ends, an outer member having an inlet connection and an internal annular inlet passage open thereto, an annular inlet member disposed in said outer member and having an internal annular delivery passage communicating with said inlet passage, packings disposed at each side of said inlet member, and packing glands arranged in the ends of said outer member coacting with said packings, said valve members being movably associated so that the ports of the inner member may be alternately brought into communication with said inlet and exhausts at the outer sides of said packings.

4. In a valve, the combination of an inner member having spaced and separated ports with independent delivery connections therefor, an outer member having an inlet member therein, packings for said inlet member, said outer member at the outer sides of said packings constituting exhaust chambers and having exhaust ports therefor, and packing glands arranged in the ends of said outer member coacting with said packings, said glands being open to said exhaust, said valve members being movably associated so that the ports of the inner member may be alternately brought into communication with said inlet and exhausts.

5. In a valve, the combination of an inner member having spaced and separated ports with independent delivery connections therefor, an outer member having an inlet member therein, packings for said inlet member, said outer member at the outer sides of said packings constituting exhaust chambers, and packing glands arranged in the ends of said outer member coacting with said packings, said valve members being movably associated so that the ports of the inner member may be alternately brought into communication with said inlet and exhausts.

6. In a valve, the combination of an inner member having spaced and separated ports with independent delivery connections therefor, an outer member having an inlet member therein and an exhaust at each side of said inlet member, packings for said inlet member, and packing glands arranged in the ends of said outer member coacting with said packings, said valve members being movably associated so that the ports of the inner member may be alternately brought into communication with said inlet and exhausts.

7. In a valve, the combination of an inner member having spaced and separated ports with delivery connections at the ends of

said member, and an outer member having an inlet connected to a source of supply and an exhaust at each side of said inlet, said members being associated for longitudinal movement so that the ports of the inner member may be alternately brought into communication with said inlet and opened to said exhaust.

In witness whereof, I have hereunto set my hand and seal in the presence of two witnesses.

IRA C. HAVENS. [L. S.]

Witnesses:
G. B. THOMPSON,
M. R. GLASGOW.