May 15, 1956 G. E. LAMB 2,745,538

SHEET SPREADING CONVEYOR

Filed July 12, 1954 3 Sheets-Sheet 1

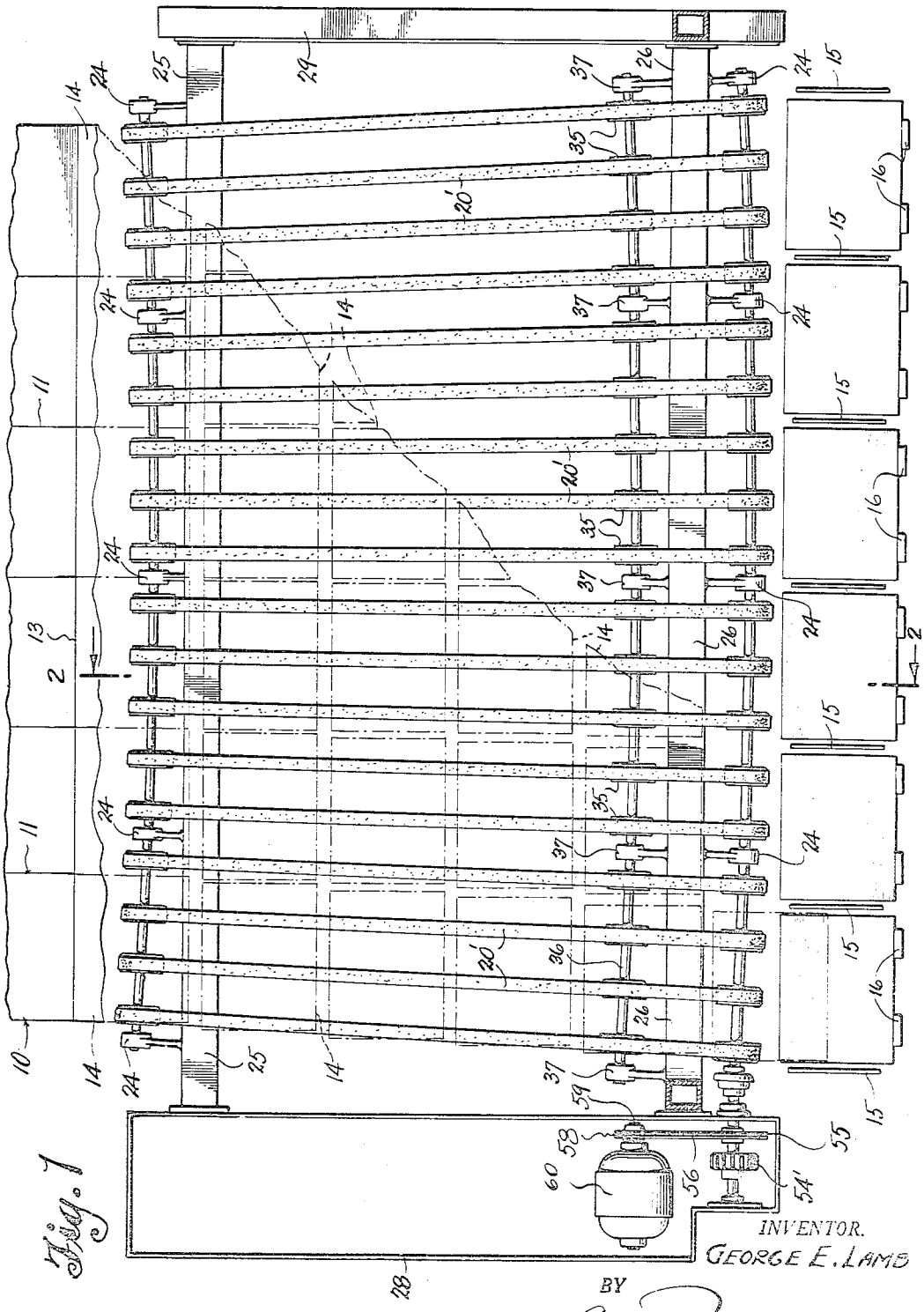

Fig. 1

INVENTOR.
GEORGE E. LAMB

BY
Cook & Robinson
ATTORNEYS

May 15, 1956 G. E. LAMB 2,745,538

SHEET SPREADING CONVEYOR

Filed July 12, 1954 3 Sheets-Sheet 2

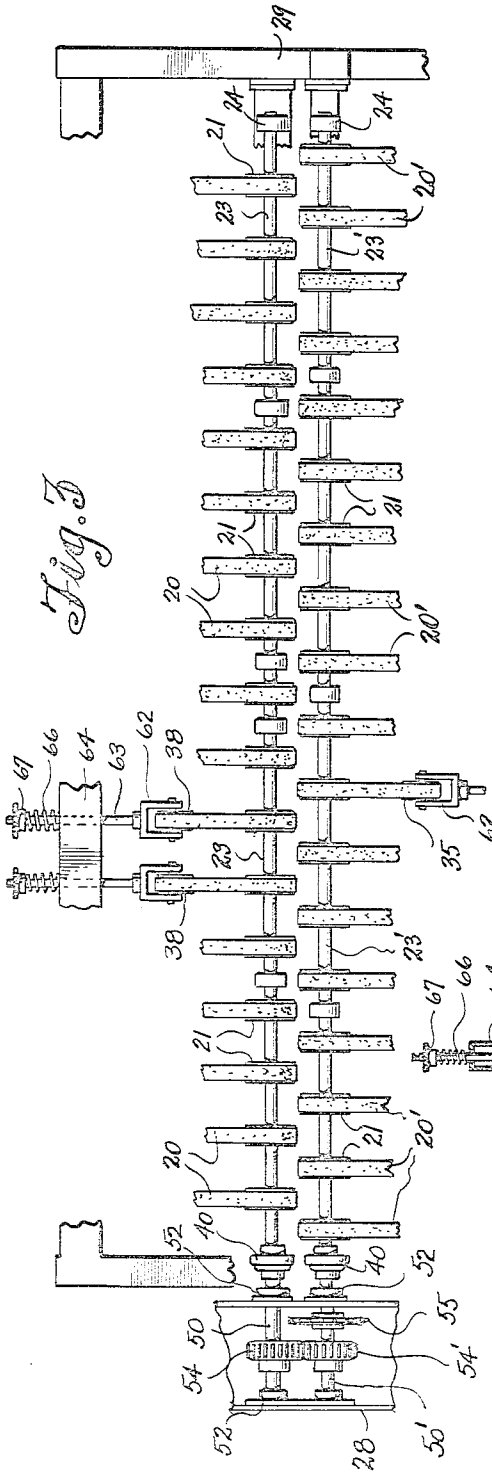

Fig. 1

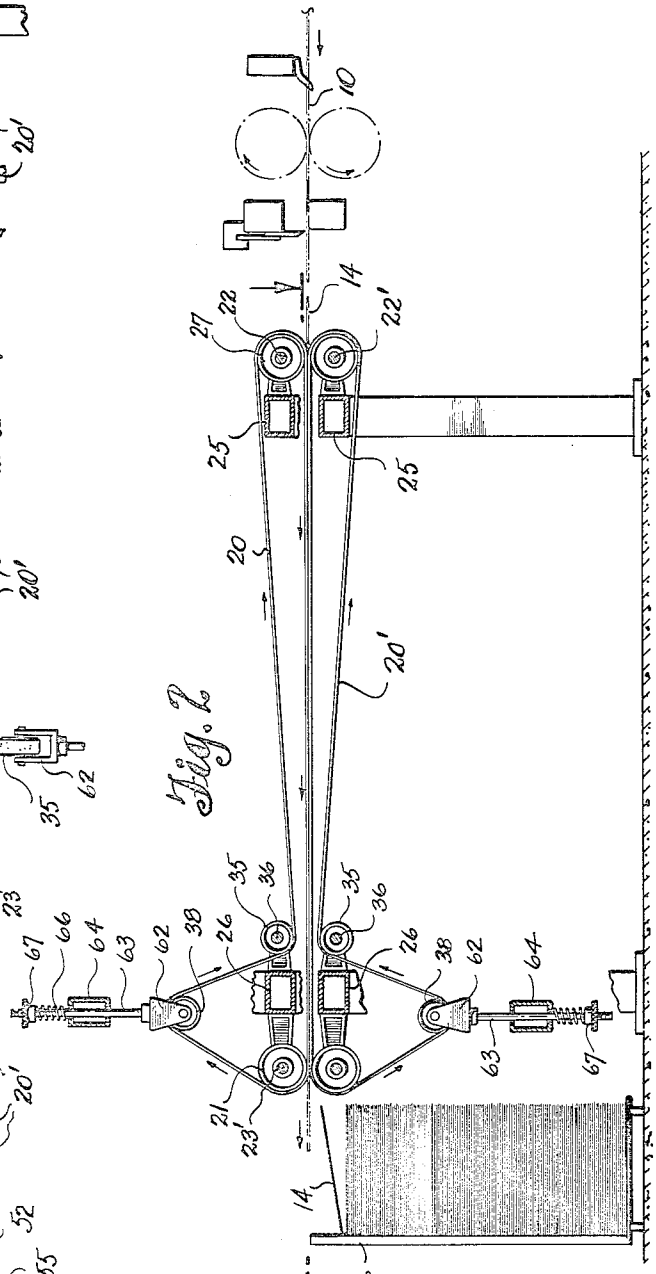

Fig. 2

INVENTOR.
GEORGE E. LAMB
BY
Cook & Robinson
ATTORNEYS

May 15, 1956 G. E. LAMB 2,745,538

SHEET SPREADING CONVEYOR

Filed July 12, 1954 3 Sheets-Sheet 3

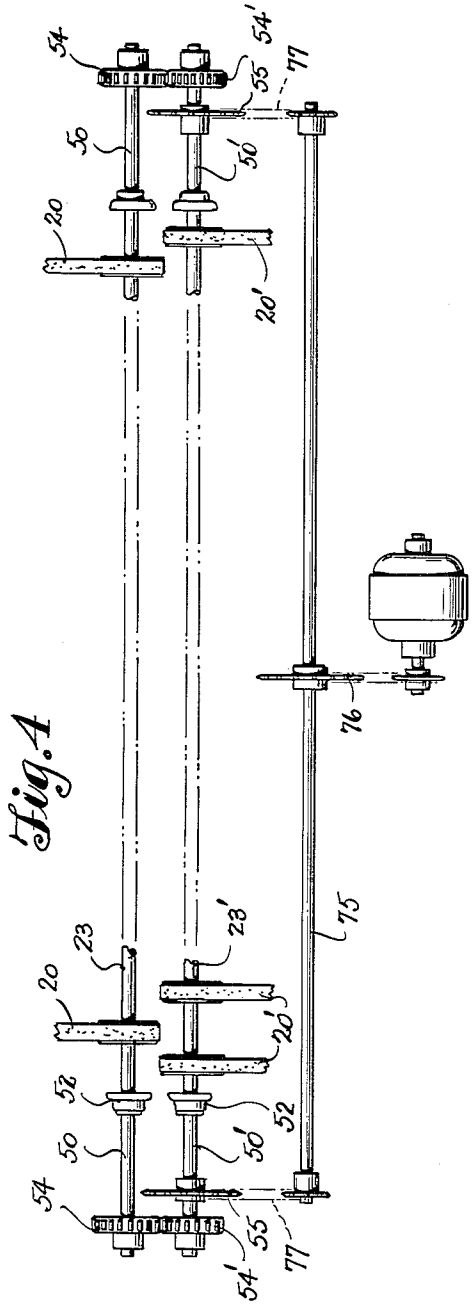

Fig. 4

INVENTOR.
GEORGE E. LAMB
BY
Cook & Robinson
ATTORNEYS

United States Patent Office

2,745,538

Patented May 15, 1956

2,745,538

SHEET SPREADING CONVEYOR

George E. Lamb, Hoquiam, Wash., assignor to Lamb-Grays Harbor Co., Inc., Hoquiam, Wash., a corporation of Washington

Application July 12, 1954, Serial No. 442,601

5 Claims. (Cl. 198—34)

This invention relates to sheet handling mechanism and it has reference more particularly to a mechanism designed for the spreading apart of sheets as formed from a continuous web by the longitudinal slitting of the web and the transverse cutting of the strips thus formed, so that the sheets, as thus produced from the individual strips, can be laid down flatly in laterally spaced stacking "pans" without the usual up-bending of their edges as is now a general practice.

It is customary to cut pulp sheets from a web that may be twelve or more feet wide and continuously formed. As the web is brought from the drying rolls it is cut longitudinally into strips and these strips are then transversely divided by a continuous cut across the web, into pieces of relatively short length. These pieces, as they come from the individual strips, are then delivered into stacking pans; the stacks, as thus made, later being wrapped and bound for shipment or handling.

In the past it has been customary to slightly turn up one of the side edges of each of the sheets as separated from the strips of the web to allow them to enter the spaces between plates which separate and align the stacks. Then, after the sheets have entered their respective spaces between plates, the turned edges are flattened out and thus push the sheets sideways to compensate for the required spacing of the stack receiving means which are herein designated as the "pans." While this method is successfully used in the laying down of material that will readily spring back to its normal flat shape, material that does not readily return to its flat condition, such as some forms of pulp board, results in stacks being formed wherein the edges of the stacked sheets will remain turned up. To persons familiar with this industry, it is known that such stacks are not only difficult to wrap or package, but there are present other disadvantages which are not herein discussed. It can further be understood that, in the stacking of sheets as formed from a great number of narrow strips as cut from a wide web of pulp, the space occupied by the stack receiving pans requires so much spreading of the sheets that the edge turning method cannot be used with any degree of satisfaction.

In view of the foregoing explanatory matter, it has been the primary object of this invention to provide a novel conveyor means for receiving the pulp sheets as cut from the strips, to spread and to deliver them into the stacking pans in perfectly flat condition.

It is a further object of the present invention to provide sheet spreading conveyor means that receives the sheets as cut from the strips into which the pulp web is divided, and carries them in slightly diverging paths to such distance that space to accommodate the stacking pans as defined by the stack separating plates, is obtained.

More specifically stated, the present invention resides in the provision of a novel belt conveyor means for the carrying of the sheets as formed from the individual strips of the pulp web, whereby the sheets will be conveyed, without being angularly displaced from their original parallel relationship, along diverging paths to the desired spacing and are then dropped flatly into the stacking pans; the sheet conveying belts being operable at their receiving and delivery ends, about aligned belt carrying and driving wheels that are fixed on supporting shafts that are arcuately curved to the extent required to accommodate that divergent relationship of the belts that will result in the desired spreading apart of the sheets as conveyed thereby.

Still further objects of the present invention reside in the specific relationship and mode of use of the present sheet spreading apparatus in combination with the web cutting mechanism and stack forming "pans" or compartments, as will hereinafter be fully described.

In accomplishing these and other objects of the invention, I have provided the improved details of construction, the preferred forms of which are illustrated in the accompanying drawings, wherein:

Fig. 1 is a plan view of the present sheet spreading mechanism as associated with the stacking pans.

Fig. 2 is a vertical section of the same parts as seen on the line 2—2 in Fig. 1.

Fig. 3 is a view of the present conveyor as seen from the discharge end.

Fig. 4 is a view illustrating an alternative shaft and belt driving means.

Referring more in detail to the drawings:

In Fig. 1, in which the present sheet spreading mechanism has been rather diagrammatically illustrated in plan view, I have shown the sheet conveyor belts in a desired slightly diverging relationship. The belts are carried by belt wheels mounted on the arcuately curved shafts located at the receiving and discharge ends of the conveyor. However, it is to be explained that the degree of the arcuate curvature has herein been exaggerated to substantial extent for explanatory and illustrative purposes.

In this plan view, at the receiving end of the conveyor and sheet spreading mechanism, a pulp web is designated in its entirety by numeral 10. This web is of substantial width and it is here shown as being divided by laterally spaced longitudinal slits 11 into six strips of the same width. These strips are individually designated by numeral 12 and they are shown as being transversely cut along the line 13, to detach from the web the individual pulp sheets 14 that are to be simultaneously delivered into the stacking pans.

In the present drawings, the web slitting and strip cutting devices have not been shown as, per se, they form no part of the present invention, and it is to be understood that such devices may be any of the types now in general use for those purposes, and whereby the individual sheets will be discharged directly and without bending into the present conveyor mechanism.

At the discharge end of the conveyor mechanism, I have shown a row of sheet receiving pans; these being compartments, corresponding to the six strips, as defined between vertically disposed and parallel plates 15, and including the vertical stops 16 forming the back sides of the pans. The center to center distance between adjacent plates 15 is approximately one and one-half inches more than the length of the sheets 14. Therefore, in simultaneously delivering the six sheets from the web into their respective pans, the outside sheets must be spread approximately seven and one-half inches, and all must be maintained with edges substantially in their original parallel relationship while being delivered in order to properly enter the pans for stacking.

The present sheet spreading and conveying means comprises a succession of laterally spaced sets of upper and lower conveyor belts designated by numerals 20 and 20', respectively, that operate about belt wheels 21. The wheels 21 are all of the same diameter, and are fixed on upper

and lower supporting shafts 22 and 22' respectively, at the receiving end of the mechanism and upper and lower supporting shafts 23 and 23' respectively, at the discharge end of the machine. Corresponding wheels on the shafts at receiving and discharge ends of the machine being aligned for proper travel of the belts thereon. The shafts are revolubly mounted in supporting bearings 24 that are suitably fixed to paired and vertically spaced cross beams 25—25 and 26—26 at the opposite ends of the main frame structure; which paired beams are joined in spaced relationship by longitudinal frame members which in Fig. 1, are designated at 28 and 29.

Each of the paired belts 20 and 20' have straight flights or runs thereof, as best seen in Fig. 2, extended between the shafts 22—22' and 23—23', which travel contiguous to the same horizontal plane for the conveyance of the pulp sheets 14 between them from the web cutters to the stacking pans. Just forwardly of the cross-beams 25—26 the outside runs of both sets of sheet carrying belts operate over idler wheels 35 mounted on cross shafts 36 that are supported in bearings 37, and between the idler wheels 35 and pulley wheels 21 on shafts 23 and 23' the belts operate over the belt wheels 38 of belt tightening devices presently to be described.

The shafts 36 are also arcuately curved in conformity to the curving of shafts 22 and 23 so as to properly align the belt wheels 35 with the belts that travel thereover. The shafts 36, however, are not driven, and the wheels 35 either revolve freely thereon, or the shafts are free to revolve.

Assuming that the paired sets of belts 20—20' are being driven at the same speed and in the direction indicated by by the arrows adjacent thereto in Fig. 2, sheets 14 received between the parallel runs of the belts will be conveyed thereby and discharged from between them to the stacking pans. However, it is in the provision for effecting the spreading of the sheets for delivery to the pans that the present invention resides; this being accomplished by reason of the divergent relationship of the belts that carry the sheets to the pans.

The following descripton, as applied to the upper sets of belts, that is, to the belts 20 as seen in Fig. 1, and their mounting shafts 22, 23 and 26, and pulley wheels thereon shall apply equally to the corresponding lower sets of belts, shafts, and belt mounting wheels.

Assuming that the pulp sheets are to be conveyed in a horizontal plane, the shafts 22 and 23 are arcuately curved in the same direction in a horizontal plane. The radius of the arc of curvature of shaft 23 being longer than that of shaft 22 and their centers of curvature being forwardly of the receiving end of the conveyor. Each shaft is mounted revolubly in its supporting bearings 24 which are fixed in positions to maintain it for axial rotation about a definitely fixed line of curvature. This curving of the axial line of rotation of each shaft is accomplished by supporting the shafts for rotation in fixed opposite end bearings and in intermediate bearings that are mounted the proper distances out of line with the end bearings to obtain the desired arcuate curvature. If the sheets do not need to be spread much, the radius of the arc of curvature for each shaft will be relatively long, and can be accomplished by use of a single central bearing. However, if the sheets must be spread a considerable amount, the radius of the arc will be less, and more intermediate bearings will be required to avoid excessive stresses being set up in the shaft adjacent the central bearing.

It is of importance that the offset of all the intermediate bearings be carefully calculated in order that the degree of bend at each bearing shall be substantially equal.

To drive the belts in unison, corresponding ends of the shafts 23 and 23' are connected by means of flexible couplings 49 with the ends of a pair of drive shafts 50 and 50' mounted in bearings 52 in the frame member 28. These shafts are geared together by a pair of intermeshing gears 54—54' fixed thereon, as seen in Fig. 3, to rotate in unison and in opposite directions. Shaft 50' is equipped with a sprocket wheel 55 over which a driving chain belt 56 operates. This belt operates about and is driven by a sprocket wheel 58 on the drive shaft 59 of an electric motor 60.

In order that the tension on all belts can be accurately adjusted, thus to obtain the same speed of travel, each belt is provided with an individual tension adjusting means; this being necessary by reason of the fact that, in use, the belts may stretch to unequal amount. The change in length of belts causes difference in tightness, and belts of different tightness have different degrees of slippage. Slippage results in causing the sheets, as carried by the belts, to twist.

The belt tightening means for each of the belts 20 and 20' are alike. Each comprises, as seen in Fig. 2, the belt wheel 38 rotatably mounted in a pulley block 62 fixed on one end of a pull rod 63. The rod is mounted for sliding longitudinal movement in a transverse supporting beam 64 fixed parallel to and spaced from the corresponding beam 26. A coiled spring 66 is applied under compression about each pull rod 63 to bear against the beam and a spring tension adjusting nut 67 on the rod end to pull the rod outwardly and thus maintain the belt under a desired tension that is regulated through adjustment of the nut 67.

The sheets 14 must be uniformly grasped between the top and bottom runs of the coacting belts. Otherwise, one edge of the sheet will be pulled faster than the other, resulting in misalignment of the sheets upon discharge. This uniformity is here accomplished by the uniform spacing of the belt carrying wheels along their supporting shafts. The top and bottom belts might be located directly over one another, but this has a tendency to cause the touching belts to run off the pulleys and it has been found to be better practice to stagger the belts of top and bottom runs as seen in Fig. 3.

In the event that it should be found desirable to drive the pulley shafts 23—23' from both ends, this can be most effectively done, as noted in Fig. 4, providing connections therewith at both ends like that shown in Fig. 1, and then joining the drive shafts at each end by a cross-shaft which would be driven from a medial point in order that the annular deflection would be equal at both ends. In Fig. 4, the cross shaft is designated by numeral 75. It has a central driving sprocket wheel 76, and at its ends it has sprocket chain belt connections 77 with the drive shafts 50.

It can further be explained that the shafts which mount the belt wheels may not be bent to absolutely true arcs since it is not essential that the angle between all belts be exactly the same. The essence of the invention resides in the arcuate bending of the shafts to such extent that the desired spread of the belts will be obtained. If the lines of the belts were extended they would converge at some distance from their receiving ends. But in the present instance the radius of the arcs of curvature somewhat increase as they approach the outer ends of the shaft and thus the belts would not all converge to the same point.

It is of importance that the bearings by which the shafts are maintained in the arcuate form be so located that stresses in the shaft at the location of the bearings shall be substantially equal.

The present arrangement of parts and their operation has been found satisfactory and to accomplish all the objects set forth.

Having thus described my invention, what I claim as new therein and desire to secure by Letters Patent is:

1. A conveyor for the conveying and spreading apart of sheets that are received at one end thereof in edge to edge relationship as cut from a single web, for delivery from the other end of the conveyor into laterally spaced receptacles; said conveyor comprising a plurality of substantially coextensive conveyor belts driven in unison with sheet carrying runs thereof extending in the same

plane and in such diverging relationship as to effect the separation of the sheets as conveyed thereon to the extent of lateral separation of said receptacles, pulley wheels mounting said conveyor belts at the receiving and discharge ends of the conveyor, and cross-shafts at the receiving and discharge ends of the conveyor, each shaft mounting all of the pulley wheels at the corresponding end of the conveyor thereon; and means maintaining each of said cross-shafts in a predetermined curvature whereby each of the pulley wheels will be maintained in operative alignment with the individual belt which operates thereabout.

2. A conveyor as recited in claim 1 wherein at least one of said shafts is equipped with a driving means, and drives all of the pulley wheels mounted thereon.

3. A conveyor for the conveying and spreading of sheets that are received at one end thereof in edge to edge relationship as cut from a single web; said conveyor comprising upper and lower sets of belts operating in unison between the place of reception of said sheets and the place of their discharge; said belts as comprised in the upper and lower sets all being in slight divergence, from receiving to discharge ends, and said belts of the upper and lower sets having runs thereof operating substantially in the same plane to receive and convey said sheets between them, and to effect the spreading apart of the sheets, as conveyed, and as determined by the degree of divergence of the belts; cross-shafts at the receiving and discharge ends of the conveyor, bearings mounting said shafts, pulley wheels mounted on said shafts and mounting said belts thereon, means for driving one shaft and the wheels mounted thereon to effect the driving of the belts in unison; the shaft mounting bearings being located at spaced intervals therealong and mounting the same for rotation about axial lines of predetermined

curvature whereby the pulley wheels are maintained in operative alignment with the particular belts that operate thereover.

4. A conveyor as in claim 3 wherein an individual belt tightening means is associated with each belt.

5. A conveyor for the conveying and lateral separation of sheets deposited thereon at the receiving end in close side by side relationship across the conveyor; said conveyor comprising a plurality of substantially coextensive conveyor belts with article carrying runs thereof operating in the same plane in unison and extending in diverging relationship, pulley wheels mounting the belts at their opposite ends, cross-shafts at the receiving and discharge ends of the conveyor, each mounting all of the pulley wheels at the corresponding end of the conveyor coaxially thereon and fixed bearings mounting said cross-shafts therein and maintaining them in that predetermined curvature whereby the pulley wheels as mounted thereon will be maintained in operative alignment with the individual belts operating thereabout and means for driving one of said shafts.

References Cited in the file of this patent

UNITED STATES PATENTS

85,012	King	Dec. 15, 1868
862,148	Filteau	Aug. 6, 1907
1,858,320	Beardsley et al.	May 17, 1932
1,938,110	Neutelings	Dec. 5, 1933
2,090,598	Parsons	Aug. 17, 1937
2,326,098	Kimmich	Aug. 3, 1943
2,594,591	Runton	Apr. 29, 1952
2,626,422	Lammertse	Jan. 27, 1953

FOREIGN PATENTS

525,995	Germany	June 1, 1931