(19) IPOS INTELLECTUAL PROPERTY OFFICE OF SINGAPORE

(11) Publication number: **SG 172131 A1**
(43) Publication date: **28.07.2011**
(51) Int. Cl: **F04D 25/08, F04D 29/62, F04D 29/66, F04F 5/16, F04F 5/46;**

(12) Patent Application

(21) Application number: **2011043205**
(22) Date of filing: **18.02.2010**
(30) Priority: **GB 0903671.6 04.03.2009**
US 0903673.2 04.03.2009

(71) Applicant: **DYSON TECHNOLOGY LIMITED TETBURY HILL, MALMESBURY, WILTSHIRE SN16 0RP GB**

(72) Inventor: **COOKSON, MATTHEW DYSON TECHNOLOGY LIMITED TETBURY HILL MALMESBURY WILTSHIRE SN16 0RP GB**
SIMMONDS, KEVIN DYSON TECHNOLOGY LIMITED TETBURY HILL MALMESBURY WILTSHIRE SN16 0RP GB
NICOLAS, FREDERIC DYSON TECHNOLOGY LIMITED TETBURY HILL MALMESBURY WILTSHIRE SN16 0RP GB

(54) **Title:**
A FAN ASSEMBLY

(57) **Abstract:**
A fan assembly (10) for creating an air current comprises a nozzle (14) mounted on a base. The base comprises an outer casing(16), a silencing member housed within the outer casing (16), an impeller housing located (64) within the outer casing (16), the impeller housing (64) having an air inlet (70) and an air outlet, an impeller (52) located within the impeller housing and a motor (56) for driving the impeller about an axis to create an air flow through the impeller housing. The nozzle comprises an interior passage (86) for receiving the air flow from the air outlet of the impeller housing and a mouth (26) through which the air flow is emitted from the fan assembly, wherein the silencing member is located beneath the air inlet (70) of the impeller housing (64) and is spaced from the air inlet along said axis by a distance in the range from 5 mm to 60 mm.

This PDF First Page has been artificially created from the Singaporian Abstracts

(12) INTERNATIONAL APPLICATION PUBLISHED UNDER THE PATENT COOPERATION TREATY (PCT)

(19) World Intellectual Property Organization
International Bureau

(43) International Publication Date
10 September 2010 (10.09.2010)

PCT

(10) International Publication Number
WO 2010/100448 A1

(51) International Patent Classification:
F04D 25/08 (2006.01) *F04F 5/16* (2006.01)
F04D 29/62 (2006.01) *F04F 5/46* (2006.01)
F04D 29/66 (2006.01)

(21) International Application Number:
PCT/GB2010/050266

(22) International Filing Date:
18 February 2010 (18.02.2010)

(25) Filing Language: English

(26) Publication Language: English

(30) Priority Data:
0903671.6 4 March 2009 (04.03.2009) GB
0903673.2 4 March 2009 (04.03.2009) GB

(71) Applicant *(for all designated States except US)*: **DYSON TECHNOLOGY LIMITED** [GB/GB]; Tetbury Hill, Malmesbury, Wiltshire SN16 0RP (GB).

(72) Inventors; and
(75) Inventors/Applicants *(for US only)*: **COOKSON, Matthew** [GB/GB]; Dyson Technology Limited, Tetbury Hill, Malmesbury, Wiltshire SN16 0RP (GB). **SIMMONDS, Kevin** [GB/GB]; Dyson Technology Limited, Tetbury Hill, Malmesbury, Wiltshire SN16 0RP (GB). **NICOLAS, Frederic** [FR/GB]; Dyson Technology Limited, Tetbury Hill, Malmesbury, Wiltshire SN16 0RP (GB).

(74) Agents: **BOOTH, Andrew** et al.; Dyson Technology Limited, Intellectual Property Department, Tetbury Hill, Malmesbury, Wiltshire SN16 0RP (GB).

(81) Designated States *(unless otherwise indicated, for every kind of national protection available)*: AE, AG, AL, AM, AO, AT, AU, AZ, BA, BB, BG, BH, BR, BW, BY, BZ, CA, CH, CL, CN, CO, CR, CU, CZ, DE, DK, DM, DO, DZ, EC, EE, EG, ES, FI, GB, GD, GE, GH, GM, GT, HN, HR, HU, ID, IL, IN, IS, JP, KE, KG, KM, KN, KP, KR, KZ, LA, LC, LK, LR, LS, LT, LU, LY, MA, MD, ME, MG, MK, MN, MW, MX, MY, MZ, NA, NG, NI, NO, NZ, OM, PE, PG, PH, PL, PT, RO, RS, RU, SC, SD, SE, SG, SK, SL, SM, ST, SV, SY, TH, TJ, TM, TN, TR, TT, TZ, UA, UG, US, UZ, VC, VN, ZA, ZM, ZW.

(84) Designated States *(unless otherwise indicated, for every kind of regional protection available)*: ARIPO (BW, GH, GM, KE, LS, MW, MZ, NA, SD, SL, SZ, TZ, UG, ZM, ZW), Eurasian (AM, AZ, BY, KG, KZ, MD, RU, TJ, TM), European (AT, BE, BG, CH, CY, CZ, DE, DK, EE, ES, FI, FR, GB, GR, HR, HU, IE, IS, IT, LT, LU, LV, MC, MK, MT, NL, NO, PL, PT, RO, SE, SI, SK, SM, TR), OAPI (BF, BJ, CF, CG, CI, CM, GA, GN, GQ, GW, ML, MR, NE, SN, TD, TG).

Published:

— *with international search report (Art. 21(3))*

(54) **Title**: A FAN ASSEMBLY

FIG. 3

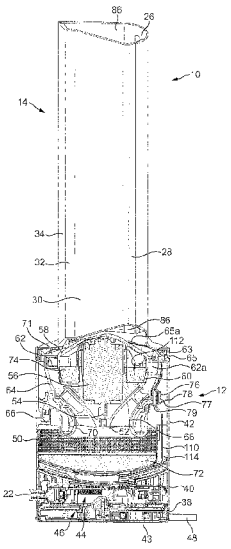

(57) **Abstract**: A fan assembly (10) for creating an air current comprises a nozzle (14) mounted on a base. The base comprises an outer casing(16), a silencing member housed within the outer casing (16), an impeller housing located (64) within the outer casing (16), the impeller housing (64) having an air inlet (70) and an air outlet, an impeller (52) located within the impeller housing and a motor (56) for driving the impeller about an axis to create an air flow through the impeller housing. The nozzle comprises an interior passage (86) for receiving the air flow from the air outlet of the impeller housing and a mouth (26) through which the air flow is emitted from the fan assembly, wherein the silencing member is located beneath the air inlet (70) of the impeller housing (64) and is spaced from the air inlet along said axis by a distance in the range from 5 mm to 60 mm.

WO 2010/100448 A1

A Fan Assembly

The present invention relates to a fan assembly. Particularly, but not exclusively, the present invention relates to a domestic fan, such as a desk fan, for creating air circulation and air current in a room, in an office or other domestic environment.

A conventional domestic fan typically includes a set of blades or vanes mounted for rotation about an axis, and drive apparatus for rotating the set of blades to generate an air flow. The movement and circulation of the air flow creates a 'wind chill' or breeze and, as a result, the user experiences a cooling effect as heat is dissipated through convection and evaporation.

Such fans are available in a variety of sizes and shapes. For example, a ceiling fan can be at least 1 m in diameter, and is usually mounted in a suspended manner from the ceiling to provide a downward flow of air to cool a room. On the other hand, desk fans are often around 30 cm in diameter, and are usually free standing and portable. Other types of fan can be attached to the floor or mounted on a wall. Fans such as that disclosed in USD 103,476 and US 1,767,060 are suitable for standing on a desk or a table.

A disadvantage of this type of fan is that the air flow produced by the rotating blades of the fan is generally not uniform. This is due to variations across the blade surface or across the outward facing surface of the fan. The extent of these variations can vary from product to product and even from one individual fan machine to another. These variations result in the generation of an uneven or 'choppy' air flow which can be felt as a series of pulses of air and which can be uncomfortable for a user. In addition, this type of fan can be noisy and the noise generated may become intrusive with prolonged use in a domestic environment. A further disadvantage is that the cooling effect created by the fan diminishes with distance from the user. This means that the fan must be placed in close proximity to the user in order for the user to experience the cooling effect of the fan.

An oscillating mechanism may be employed to rotate the outlet from the fan so that the air flow is swept over a wide area of a room. In this way the direction of air flow from the fan can be altered. In addition the drive apparatus may rotate the set of blades at a variety of speeds to optimise the airflow output by the fan. The blade speed adjustment and oscillating mechanism can lead to some improvement in the quality and uniformity of the air flow felt by a user although the characteristic 'choppy' air flow remains.

Some fans, sometimes known as or air circulators, generate a cooling flow of air without the use of rotating blades. Fans such as those described in US 2,488,467 and JP 56-167897 have large base portions including a motor and an impeller for generating an air flow in the base. The air flow is channeled from the base to an air discharge slot from which the air flow is projected forward towards a user. The fan of US 2,488, 467 emits air flow from a series of concentric slots, whereas the fan of JP 56-167897 channels the air flow to a neck piece leading to a single air discharging slot.

A fan that attempts to provide cooling air flow through a slot without the use of rotating blades requires an efficient transfer of air flow from the base to the slot. The air flow is constricted as it is channeled into the slot and this constriction creates pressure in the fan which must be overcome by the air flow generated by the motor and the impeller in order to project the air flow from the slot. Any inefficiencies in the system, for example losses through the fan housing or disruptions in the air flow path, will reduce the air flow from the fan. The high efficiency requirement restricts the options for the use of motors and other means for creating air flow. This type of fan can be noisy as vibrations generated by the motor and impeller and any turbulence in the air flow tend to be transmitted and amplified.

In a first aspect the present invention provides a fan assembly for creating an air current, the fan assembly comprising a base comprising an outer casing having a side wall comprising at least one air inlet, the outer casing housing an impeller housing

comprising an air inlet and an air outlet, an impeller located within the impeller housing, a motor for driving the impeller about an axis to create an air flow through the impeller housing, and a silencing member located beneath the air inlet of the impeller housing; and a nozzle mounted on the base, the nozzle comprising an interior passage for receiving the air flow from the air outlet of the impeller housing and a mouth through which the air flow is emitted from the fan assembly; characterized in that the silencing member is spaced from the air inlet of the impeller housing along said axis by a distance in the range from 5 mm to 60 mm, and in that the nozzle extends about a nozzle axis to define an opening through which air from outside the fan assembly is drawn by the air flow emitted from the mouth.

Some noise and motor vibration is reflected from the inner walls of the outer casing and the impeller housing. A silencing member located within the outer casing, particularly when located beneath the air inlet of the impeller housing, can absorb sound and noise within the outer casing. The arrangement of the silencing member spaced from the air inlet along the said axis by a distance in the range from 5 mm to 60 mm minimises the distance between the silencing member and the air inlet of the impeller housing without restricting the flow of air into the impeller housing. The arrangement can enable sufficient air to be drawn into the base to provide an unrestricted inflow of air to the impeller and the fan assembly. The side wall preferably comprises a plurality of air inlets. Locating air inlets around the base provides flexibility in the arrangement of the base and the nozzle, and enables air to flow into the base from a variety of points so that more air can flow into the assembly as a whole.

Preferably the axis is substantially vertical when the base is located on a horizontal surface. In the preferred embodiment the silencing member is spaced from the air inlet by a distance in the range from 10 mm to 20 mm, preferably around 17 mm. This can provide a short, compact air flow path that minimises noise and frictional losses. The arrangement allows the silencing member to occupy a significant volume of a lower portion of the base and to absorb noise and vibrations rebounding from within and across the base.

Preferably the silencing member comprises acoustic foam. The arrangement provides a compact silencing member located so as to reduce the generation of turbulent air flows

and thus the creation of noise and vibration within the base. The acoustic foam structure has noise absorption properties matched to the shape and orientation of the impeller housing. A second silencing member may be housed within the impeller housing. This second silencing member is preferably annular, and preferably also comprises acoustic foam.

Preferably the base is substantially cylindrical. This arrangement can be compact with base dimensions that are small compared to those of the nozzle and compared to the size of the overall fan assembly. Advantageously, the invention can provide a fan assembly delivering a suitable cooling effect from a footprint smaller than that of prior art fans.

Preferably, the nozzle surrounds the opening. Preferably, said at least one air inlet to the outer casing is arranged substantially orthogonal to said axis. The direction in which air is emitted from the air inlet to the outer casing is substantially at a right angle to the direction in which the air flow passes into the impeller housing and the distance and angle is such that there is no significant loss in the velocity of the portions of the air flow as they are directed into the impeller housing.

More preferably, said at least one air inlet to the outer casing comprises a plurality of air inlets extending about a second axis substantially orthogonal to said first-mentioned axis. In this arrangement it is preferred that the assembly has a flow path extending from each inlet to the outer casing to the air inlet to the impeller housing, wherein the inlet to the impeller housing is substantially orthogonal to the or each air inlet to the outer casing. The arrangement provides an inlet air path that minimises noise and frictional losses in the system.

In a preferred embodiment, the side wall comprises a mesh having a plurality of apertures and side wall land regions, and having a surface area comprising the total area of the plurality of apertures and side wall land regions. A mesh punched with a

plurality of apertures can be repeatably and reliably manufactured for a fan assembly leading to uniform fan performance and manufacture. Preferably, the mesh extends around substantially the circumference of the base and more preferably, the plurality of apertures is equally spaced around the base. The arrangement provides a number of air flow paths through which air is able to flow into the fan assembly whilst maintaining wall regions that minimise noise generation in the base and in the assembly as a whole. The plurality of apertures of the mesh is preferably spaced by a distance of no more than 50 mm along said axis from the air inlet of the impeller housing. This can provide a short, compact air flow path that minimises noise and frictional losses.

In a preferred embodiment the open area of the apertures is at least 30% of the area of the total surface area of the mesh. Preferably, the open area of the mesh is in the range from 33 to 45% of the total surface area of the mesh. This arrangement provides an open area allowing sufficient air to be drawn into the base to create an air flow through the impeller housing, whilst forming a side wall structure to inhibit the transmission of noise and vibrations to the environment outside the fan assembly.

The fan assembly is preferably in the form of a bladeless fan assembly. Through use of a bladeless fan assembly an air current can be generated without the use of a bladed fan. Without the use of a bladed fan to project the air current from the fan assembly, a relatively uniform air current can be generated and guided into a room or towards a user. The air current can travel efficiently out from the outlet, losing little energy and velocity to turbulence.

The term 'bladeless' is used to describe a fan assembly in which air flow is emitted or projected forward from the fan assembly without the use of moving blades. Consequently, a bladeless fan assembly can be considered to have an output area, or emission zone, absent moving blades from which the air flow is directed towards a user or into a room. The output area of the bladeless fan assembly may be supplied with a primary air flow generated by one of a variety of different sources, such as pumps, generators, motors or other fluid transfer devices, and which may include a rotating

device such as a motor rotor and/or a bladed impeller for generating the air flow. The generated primary air flow can pass from the room space or other environment outside the fan assembly into the fan assembly, and then back out to the room space through the outlet.

Hence, the description of a fan assembly as bladeless is not intended to extend to the description of the power source and components such as motors that are required for secondary fan functions. Examples of secondary fan functions can include lighting, adjustment and oscillation of the fan assembly.

The nozzle preferably comprises a Coanda surface located adjacent the mouth and over which the mouth is arranged to direct the air flow emitted therefrom. Preferably, the external surface of the inner casing section of the nozzle is shaped to define the Coanda surface. The Coanda surface preferably extends about the opening. A Coanda surface is a known type of surface over which fluid flow exiting an output orifice close to the surface exhibits the Coanda effect. The fluid tends to flow over the surface closely, almost 'clinging to' or 'hugging' the surface. The Coanda effect is already a proven, well documented method of entrainment in which a primary air flow is directed over a Coanda surface. A description of the features of a Coanda surface, and the effect of fluid flow over a Coanda surface, can be found in articles such as Reba, Scientific American, Volume 214, June 1966 pages 84 to 92. Through use of a Coanda surface, an increased amount of air from outside the fan assembly is drawn through the opening by the air emitted from the mouth.

Preferably, an air flow enters the nozzle of the fan assembly from the base. In the following description this air flow will be referred to as primary air flow. The primary air flow is emitted from the mouth of the nozzle and preferably passes over a Coanda surface. The primary air flow entrains air surrounding the mouth of the nozzle, which acts as an air amplifier to supply both the primary air flow and the entrained air to the user. The entrained air will be referred to here as a secondary air flow. The secondary air flow is drawn from the room space, region or external environment surrounding the

mouth of the nozzle and, by displacement, from other regions around the fan assembly, and passes predominantly through the opening defined by the nozzle. The primary air flow directed over the Coanda surface combined with the entrained secondary air flow equates to a total air flow emitted or projected forward from the opening defined by the nozzle. Preferably, the entrainment of air surrounding the mouth of the nozzle is such that the primary air flow is amplified by at least five times, more preferably by at least ten times, while a smooth overall output is maintained.

Preferably, the nozzle comprises a diffuser surface located downstream of the Coanda surface. The external surface of the inner casing section of the nozzle is preferably shaped to define the diffuser surface.

The impeller is preferably a mixed flow impeller. Preferably there is a diffuser located within the impeller housing and downstream from the impeller. The motor is preferably a DC brushless motor to avoid frictional losses and carbon debris from the brushes used in a traditional brushed motor. Reducing carbon debris and emissions is advantageous in a clean or pollutant sensitive environment such as a hospital or around those with allergies. While induction motors, which are generally used in fans, also have no brushes, a DC brushless motor can provide a much wider range of operating speeds than an induction motor.

The base of the fan assembly preferably comprises means for directing a portion of the air flow from the air outlet of the impeller housing towards the interior passage of the nozzle.

The direction in which air is emitted from the air outlet of the impeller housing is preferably substantially at a right angle to the direction in which the air flow passes through at least part of the interior passage. The interior passage is preferably annular, and is preferably shaped to divide the air flow into two air streams which flow in opposite directions around the opening. In the preferred embodiment, the air flow passes into at least part of the interior passage in a sideways direction, and the air is

emitted from the air outlet of the impeller housing in a forward direction. In view of this, the means for directing a portion of the air flow from the air outlet of the impeller housing preferably comprises at least one curved vane. The or each curved vane is preferably shaped to change the direction of the air flow by around 90°. The curved vanes are shaped so that there is no significant loss in the velocity of the portions of the air flow as they are directed into the interior passage.

The base preferably comprises control means for controlling the fan assembly. For safety reasons and ease of use, it can be advantageous to locate control elements away from the nozzle so that the control functions, such as, for example, oscillation, tilting, lighting or activation of a speed setting, are not activated during a fan operation.

Preferably, the mouth of the nozzle extends about the opening, and is preferably annular. Preferably the nozzle extends about the opening by a distance in the range from 50 to 250 cm. The nozzle preferably comprises at least one wall defining the interior passage and the mouth, and wherein said at least one wall comprises opposing surfaces defining the mouth. Preferably, the mouth has an outlet, and the spacing between the opposing surfaces at the outlet of the mouth is in the range from 0.5 mm to 5 mm, more preferably in the range from 0.5mm to 1.5 mm. The nozzle may preferably comprise an inner casing section and an outer casing section which define the mouth of the nozzle. Each section is preferably formed from a respective annular member, but each section may be provided by a plurality of members connected together or otherwise assembled to form that section. The outer casing section is preferably shaped so as to partially overlap the inner casing section. This can enable an outlet of the mouth to be defined between overlapping portions of the external surface of the inner casing section and the internal surface of the outer casing section of the nozzle. The nozzle may comprise a plurality of spacers for urging apart the overlapping portions of the inner casing section and the outer casing section of the nozzle. This can assist in maintaining a substantially uniform outlet width about the opening. The spacers are preferably evenly spaced along the outlet.

The maximum air flow of the air current generated by the fan assembly is preferably in the range from 300 to 800 litres per second, more preferably in the range from 500 to 800 litres per second.

An embodiment of the invention will now be described with reference to the accompanying drawings, in which:

Figure 1 is a front view of a fan assembly;

Figure 2(a) is a perspective view of the base of the fan assembly of Figure 1;

Figure 2(b) is a perspective view of the nozzle of the fan assembly of Figure 1;

Figure 3 is a sectional view through the fan assembly of Figure 1;

Figure 4 is an enlarged view of part of Figure 3;

Figure 5(a) is a side view of the fan assembly of Figure 1 showing the fan assembly in an untilted position;

Figure 5(b) is a side view of the fan assembly of Figure 1 showing the fan assembly in a first tilted position;

Figure 5(c) is a side view of the fan assembly of Figure 1 showing the fan assembly in a second, tilted position;

Figure 6 is a top perspective view of the upper base member of the fan assembly of Figure 1;

Figure 7 is a rear perspective view of the main body of the fan assembly of Figure 1;

Figure 8 is an exploded view of the main body of Figure 7;

Figure 9(a) illustrates the paths of two sectional views through the base when the fan assembly is in an untilted position;

Figure 9(b) is a sectional view along line A-A of Figure 9(a);

Figure 9(c) is a sectional view along line B-B of Figure 9(a);

Figure 10(a) illustrates the paths of two further sectional views through the base when the fan assembly is in an untilted position;

Figure 10(b) is a sectional view along line C-C of Figure 10(a); and

Figure 10(c) is a sectional view along line D-D of Figure 10(a).

Figure 1 is a front view of a fan assembly 10. The fan assembly 10 is preferably in the form of a bladeless fan assembly comprising a base 12 and a nozzle 14 mounted on and supported by the base 12. With reference to Figure 2(a), the base 12 comprises a substantially cylindrical outer casing 16 having a plurality of air inlets 18 in the form of apertures located in the outer casing 16 and through which a primary air flow is drawn into the base 12 from the external environment. The base 12 further comprises a plurality of user-operable buttons 20 and a user-operable dial 22 for controlling the operation of the fan assembly 10. In this example the base 12 has a height in the range from 200 to 300 mm, and the outer casing 16 has an external diameter in the range from 100 to 200 mm.

With reference also to Figure 2(b), the nozzle 14 has an annular shape and defines a central opening 24. The nozzle 14 has a height in the range from 200 to 400 mm. The nozzle 14 comprises a mouth 26 located towards the rear of the fan assembly 10 for emitting air from the fan assembly 10 and through the opening 24. The mouth 26 extends at least partially about the opening 24. The inner periphery of the nozzle 14 comprises a Coanda surface 28 located adjacent the mouth 26 and over which the mouth 26 directs the air emitted from the fan assembly 10, a diffuser surface 30 located downstream of the Coanda surface 28 and a guide surface 32 located downstream of the diffuser surface 30. The diffuser surface 30 is arranged to taper away from the central axis X of the opening 24 in such a way so as to assist the flow of air emitted from the fan assembly 10. The angle subtended between the diffuser surface 30 and the central axis X of the opening 24 is in the range from 5 to 25°, and in this example is around 15°. The guide surface 32 is arranged at an angle to the diffuser surface 30 to further assist the efficient delivery of a cooling air flow from the fan assembly 10. The guide surface 32 is preferably arranged substantially parallel to the central axis X of the opening 24 to present a substantially flat and substantially smooth face to the air flow emitted from the mouth 26. A visually appealing tapered surface 34 is located downstream from the guide surface 32, terminating at a tip surface 36 lying substantially perpendicular to the central axis X of the opening 24. The angle subtended between the tapered surface 34 and the central axis X of the opening 24 is preferably

around 45°. The overall depth of the nozzle 24 in a direction extending along the central axis X of the opening 24 is in the range from 100 to 150 mm, and in this example is around 110 mm.

Figure 3 illustrates a sectional view through the fan assembly 10. The base 12 comprises a lower base member 38, an intermediary base member 40 mounted on the lower base member 38, and an upper base member 42 mounted on the intermediary base member 40. The lower base member 38 has a substantially flat bottom surface 43. The intermediary base member 40 houses a controller 44 for controlling the operation of the fan assembly 10 in response to depression of the user operable buttons 20 shown in Figures 1 and 2, and/or manipulation of the user operable dial 22. The intermediary base member 40 may also house an oscillating mechanism 46 for oscillating the intermediary base member 40 and the upper base member 42 relative to the lower base member 38. The range of each oscillation cycle of the upper base member 42 is preferably between 60° and 120°, and in this example is around 90°. In this example, the oscillating mechanism 46 is arranged to perform around 3 to 5 oscillation cycles per minute. A mains power cable 48 extends through an aperture formed in the lower base member 38 for supplying electrical power to the fan assembly 10.

The upper base member 42 of the base 12 has an open upper end. The upper base member 42 comprises a cylindrical grille mesh 50 in which an array of apertures is formed. In between each aperture are side wall regions known as 'lands'. The apertures provide the air inlets 18 of the base 12. A percentage of the total surface area of the cylindrical base is an open area equivalent to the total surface area of the apertures. In the illustrated embodiment the open area is 33% of the total mesh area, each aperture has a diameter of 1.2 mm and 1.8 mm from aperture centre to aperture centre, providing 0.6 mm of land in between each aperture. Aperture open area is required for air flow into the fan assembly, but large apertures can transmit vibrations and noise from the motor to the external environment. An open area of around 30% to 45% provides a compromise between lands to inhibit the emission of noise and openings for free, unrestricted inflow of air into the fan assembly.

The upper base member 42 houses an impeller 52 for drawing the primary air flow through the apertures of the grille mesh 50 and into the base 12. Preferably, the impeller 52 is in the form of a mixed flow impeller. The impeller 52 is connected to a rotary shaft 54 extending outwardly from a motor 56. In this example, the motor 56 is a DC brushless motor having a speed which is variable by the controller 44 in response to user manipulation of the dial 22. The maximum speed of the motor 56 is preferably in the range from 5,000 to 10,000 rpm. The motor 56 is housed within a motor bucket comprising an upper portion 58 connected to a lower portion 60. The motor bucket is retained within the upper base member 42 by a motor bucket retainer 63. The upper end of the upper base member 42 comprises a cylindrical outer surface 65. The motor bucket retainer 63 is connected to the open upper end of the upper base member 42, for example by a snap-fit connection. The motor 56 and its motor bucket are not rigidly connected to the motor bucket retainer 63, allowing some movement of the motor 56 within the upper base member 42.

The motor bucket retainer 63 comprises curved vane portions 65a and 65b extending inwardly from the upper end of the motor bucket retainer 63. Each curved vane 65a, 65b overlaps a part of the upper portion 58 of the motor bucket. Thus the motor bucket retainer 63 and the curved vanes 65a and 65b act to secure and hold the motor bucket in place during movement and handling. In particular, the motor bucket retainer 63 prevents the motor bucket becoming dislodged and falling towards the nozzle 14 if the fan assembly 10 becomes inverted.

One of the upper portion 58 and the lower portion 60 of the motor bucket comprises a diffuser 62 in the form of a stationary disc having spiral fins 62a, and which is located downstream from the impeller 52. One of the spiral fins 62a has a substantially inverted U-shaped cross-section when sectioned along a line passing vertically through the upper base member 42. This spiral fin 62a is shaped to enable a power connection cable to pass through the fin 62a.

The motor bucket is located within, and mounted on, an impeller housing 64. The impeller housing 64 is, in turn, mounted on a plurality of angularly spaced supports 66, in this example three supports, located within the upper base member 42 of the base 12. A generally frusto-conical shroud 68 is located within the impeller housing 64. The shroud 68 is shaped so that the outer edges of the impeller 52 are in close proximity to, but do not contact, the inner surface of the shroud 68. A substantially annular inlet member 70 is connected to the bottom of the impeller housing 64 for guiding the primary air flow into the impeller housing 64. The top of the grille mesh 50 is spaced above the inlet member 70 by around 5 mm. The height of the grille mesh 50 is preferably around 25 mm but may be between 15 and 35mm. The top of the impeller housing 64 comprises a substantially annular air outlet 71 for guiding air flow emitted from the impeller housing 64 towards the nozzle 14.

Preferably, the base 12 further comprises silencing members for reducing noise emissions from the base 12. In this example, the upper base member 42 of the base 12 comprises a disc-shaped foam member 72 located towards the base of the upper base member 42, and a substantially annular foam member 74 located within the impeller housing 64. The bottom of the grille mesh 50 is located at substantially the same height as, and in close proximity to, the upper surface of the disc-shaped foam member 72.

In this embodiment the air inlet member 70 is spaced from the disc-shaped foam member 72 by a distance of around 17 to 20 mm. A surface area of an air inlet region of the upper base member 42 may be considered to comprise the circumference of the air inlet member 70 multiplied by the distance from the air inlet member 70 to the upper surface of the disc-shaped foam member 72. The surface area of the air inlet region in the illustrated embodiment provides a balance between a volume of foam required to absorb reflected noise and vibrations from the motor and an air inlet region sized to enable a primary flow rate of up to 30 litres per second. A fan assembly providing a greater volume of foam would necessarily reduce the air inlet region causing a

restriction or pinch in the air flow into the impeller. Restricting the flow of air to the impeller and motor could cause the motor to choke or strain and generate excess noise.

A flexible sealing member is mounted on the impeller housing 64. The flexible sealing member inhibits the return of air to the air inlet member 70 along a path extending between the outer casing 16 and the impeller housing 64 by separating the primary air flow drawn in from the external environment from the air flow emitted from the air outlet 71 of the impeller 52 and diffuser 62. The sealing member preferably comprises a lip seal 76. The sealing member is annular in shape and surrounds the impeller housing 64, extending outwardly from the impeller housing 64 towards the outer casing 16. In the illustrated embodiment the diameter of the sealing member is greater than the radial distance from the impeller housing 64 to the outer casing 16. Thus the outer portion 77 of the sealing member is biased against the outer casing 16 and caused to extend along the inner face of the outer casing 16, forming a lip. The lip seal 76 of the preferred embodiment tapers and narrows to a tip 78 as it extends away from the impeller housing 64 and towards the outer casing 16. The lip seal 76 is preferably formed from rubber.

The lip seal 76 further comprises a guide portion for guiding a power connection cable to the motor 56. The guide portion 79 of the illustrated embodiment is formed in the shape of a collar and may be a grommet.

Figure 4 illustrates a sectional view through the nozzle 14. The nozzle 14 comprises an annular outer casing section 80 connected to and extending about an annular inner casing section 82. Each of these sections may be formed from a plurality of connected parts, but in this embodiment each of the outer casing section 80 and the inner casing section 82 is formed from a respective, single moulded part. The inner casing section 82 defines the central opening 24 of the nozzle 14, and has an external peripheral surface 84 which is shaped to define the Coanda surface 28, diffuser surface 30, guide surface 32 and tapered surface 34.

The outer casing section 80 and the inner casing section 82 together define an annular interior passage 86 of the nozzle 14. Thus, the interior passage 86 extends about the opening 24. The interior passage 86 is bounded by the internal peripheral surface 88 of the outer casing section 80 and the internal peripheral surface 90 of the inner casing section 82. The outer casing section 80 comprises a base 92 which is connected to, and over, the open upper end of the upper base member 42 of the base 12, for example by a snap-fit connection. The base 92 of the outer casing section 80 comprises an aperture through which the primary air flow enters the interior passage 86 of the nozzle 14 from the upper end of the upper base member 42 of the base 12 and the open upper end of the motor bucket retainer 63.

The mouth 26 of the nozzle 14 is located towards the rear of the fan assembly 10. The mouth 26 is defined by overlapping, or facing, portions 94, 96 of the internal peripheral surface 88 of the outer casing section 80 and the external peripheral surface 84 of the inner casing section 82, respectively. In this example, the mouth 26 is substantially annular and, as illustrated in Figure 4, has a substantially U-shaped cross-section when sectioned along a line passing diametrically through the nozzle 14. In this example, the overlapping portions 94, 96 of the internal peripheral surface 88 of the outer casing section 80 and the external peripheral surface 84 of the inner casing section 82 are shaped so that the mouth 26 tapers towards an outlet 98 arranged to direct the primary flow over the Coanda surface 28. The outlet 98 is in the form of an annular slot, preferably having a relatively constant width in the range from 0.5 to 5 mm. In this example the outlet 98 has a width of around 1.1 mm. Spacers may be spaced about the mouth 26 for urging apart the overlapping portions 94, 96 of the internal peripheral surface 88 of the outer casing section 80 and the external peripheral surface 84 of the inner casing section 82 to maintain the width of the outlet 98 at the desired level. These spacers may be integral with either the internal peripheral surface 88 of the outer casing section 80 or the external peripheral surface 84 of the inner casing section 82.

Turning now to Figures 5(a), 5(b) and 5(c), the upper base member 42 is moveable relative to the intermediary base member 40 and the lower base member 38 of the base

12 between a first fully tilted position, as illustrated in Figure 5(b), and a second fully tilted position, as illustrated in Figure 5(c). This axis X is preferably inclined by an angle of around 10° as the main body is moved from an untilted position, as illustrated in Figure 5(a) to one of the two fully tilted positions. The outer surfaces of the upper base member 42 and the intermediary base member 40 are shaped so that adjoining portions of these outer surfaces of the upper base member 42 and the base 12 are substantially flush when the upper base member 42 is in the untilted position.

With reference to Figure 6, the intermediary base member 40 comprises an annular lower surface 100 which is mounted on the lower base member 38, a substantially cylindrical side wall 102 and a curved upper surface 104. The side wall 102 comprises a plurality of apertures 106. The user-operable dial 22 protrudes through one of the apertures 106 whereas the user-operable buttons 20 are accessible through the other apertures 106. The curved upper surface 104 of the intermediary base member 40 is concave in shape, and may be described as generally saddle-shaped. An aperture 108 is formed in the upper surface 104 of the intermediary base member 40 for receiving an electrical cable 110 (shown in Figure 3) extending from the motor 56.

Returning to Figure 3 the electrical cable 110 is a ribbon cable attached to the motor at joint 112. The electrical cable 110 extending from the motor 56 passes out of the lower portion 60 of the motor bucket through spiral fin 62a. The passage of the electrical cable 110 follows the shaping of the impeller housing 64 and the guide portion 79 of the lip seal 76 is shaped to enable the electrical cable 110 to pass through flexible sealing member. The collar of the lip seal 76 enables the electrical cable to be clamped and held within the upper base member 42. A cuff 114 accommodates the electrical cable 110 within the lower portion of the upper base member 42.

The intermediary base member 40 further comprises four support members 120 for supporting the upper base member 42 on the intermediary base member 40. The support members 120 project upwardly from the upper surface 104 of the intermediary base member 40, and are arranged such that they are substantially equidistant from each

other, and substantially equidistant from the centre of the upper surface 104. A first pair of the support members 120 is located along the line B-B indicated in Figure 9(a), and a second pair of the support members 120 is parallel with the first pair of support members 120. With reference also to Figures 9(b) and 9(c), each support member 120 comprises a cylindrical outer wall 122, an open upper end 124 and a closed lower end 126. The outer wall 122 of the support member 120 surrounds a rolling element 128 in the form of a ball bearing. The rolling element 128 preferably has a radius which is slightly smaller than the radius of the cylindrical outer wall 122 so that the rolling element 128 is retained by and moveable within the support member 120. The rolling element 128 is urged away from the upper surface 104 of the intermediary base member 40 by a resilient element 130 located between the closed lower end 126 of the support member 120 and the rolling element 128 so that part of the rolling element 128 protrudes beyond the open upper end 124 of the support member 120. In this embodiment, the resilient member 130 is in the form of a coiled spring.

Returning to Figure 6, the intermediary base member 40 also comprises a plurality of rails for retaining the upper base member 42 on the intermediary base member 40. The rails also serve to guide the movement of the upper base member 42 relative to the intermediary base member 40 so that there is substantially no twisting or rotation of the upper base member 42 relative to the intermediary base member 40 as it is moved from or to a tilted position. Each of the rails extends in a direction substantially parallel to the axis X. For example, one of the rails lies along line D-D indicated in Figure 10(a). In this embodiment, the plurality of rails comprises a pair of relatively long, inner rails 140 located between a pair of relatively short, outer rails 142. With reference also to Figures 9(b) and 10(b), each of the inner rails 140 has a cross-section in the form of an inverted L-shape, and comprises a wall 144 which extends between a respective pair of the support members 120, and which is connected to, and upstanding from, the upper surface 104 of the intermediary base member 40. Each of the inner rails 140 further comprises a curved flange 146 which extends along the length of the wall 144, and which protrudes orthogonally from the top of the wall 144 towards the adjacent outer guide rail 142. Each of the outer rails 142 also has a cross-section in the form of an

inverted L-shape, and comprises a wall 148 which is connected to, and upstanding from, the upper surface 52 of the intermediary base member 40 and a curved flange 150 which extends along the length of the wall 148, and which protrudes orthogonally from the top of the wall 148 away from the adjacent inner guide rail 140.

With reference now to Figures 7 and 8, the upper base member 42 comprises a substantially cylindrical side wall 160, an annular lower end 162 and a curved base 164 which is spaced from lower end 162 of the upper base member 42 to define a recess. The grille mesh 50 is preferably integral with the side wall 160. The side wall 160 of the upper base member 42 has substantially the same external diameter as the side wall 102 of the intermediary base member 40. The base 164 is convex in shape, and may be described generally as having an inverted saddle-shape. An aperture 166 is formed in the base 164 for allowing the cable 110 to extend from base 164 of the upper base member 42 into the cuff 114. Two pairs of stop members 168 extend upwardly (as illustrated in Figure 8) from the periphery of base 164. Each pair of stop members 168 is located along a line extending in a direction substantially parallel to the axis X. For example, one of the pairs of stop members 168 is located along line D-D illustrated in Figure 10(a).

A convex tilt plate 170 is connected to the base 164 of the upper base member 42. The tilt plate 170 is located within the recess of the upper base member 42, and has a curvature which is substantially the same as that of the base 164 of the upper base member 42. Each of the stop members 168 protrudes through a respective one of a plurality of apertures 172 located about the periphery of the tilt plate 170. The tilt plate 170 is shaped to define a pair of convex races 174 for engaging the rolling elements 128 of the intermediary base member 40. Each race 174 extends in a direction substantially parallel to the axis X, and is arranged to receive the rolling elements 128 of a respective pair of the support members 120, as illustrated in Figure 9(c).

The tilt plate 170 also comprises a plurality of runners, each of which is arranged to be located at least partially beneath a respective rail of the intermediary base member 40

and thus co-operate with that rail to retain the upper base member 42 on the intermediary base member 40 and to guide the movement of the upper base member 42 relative to the intermediary base member 40. Thus, each of the runners extends in a direction substantially parallel to the axis X. For example, one of the runners lies along line D-D indicated in Figure 10(a). In this embodiment, the plurality of runners comprises a pair of relatively long, inner runners 180 located between a pair of relatively short, outer runners 182. With reference also to Figures 9(b) and 10(b), each of the inner runners 180 has a cross-section in the form of an inverted L-shape, and comprises a substantially vertical wall 184 and a curved flange 186 which protrudes orthogonally and inwardly from part of the top of the wall 184. The curvature of the curved flange 186 of each inner runner 180 is substantially the same as the curvature of the curved flange 146 of each inner rail 140. Each of the outer runners 182 also has a cross-section in the form of an inverted L-shape, and comprises a substantially vertical wall 188 and a curved flange 190 which extends along the length of the wall 188, and which protrudes orthogonally and inwardly from the top of the wall 188. Again, the curvature of the curved flange 190 of each outer runner 182 is substantially the same as the curvature of the curved flange 150 of each outer rail 142. The tilt plate 170 further comprises an aperture 192 for receiving the electrical cable 110.

To connect the upper base member 42 to the intermediary base member 40, the tilt plate 170 is inverted from the orientation illustrated in Figures 7 and 8, and the races 174 of the tilt plate 170 located directly behind and in line with the support members 120 of the intermediary base member 40. The electrical cable 110 extending through the aperture 166 of the upper base member 42 may be threaded through the apertures 108, 192 in the tilt plate 170 and the intermediary base member 40 respectively for subsequent connection to the controller 44, as illustrated in Figure 3. The tilt plate 170 is then slid over the intermediary base member 40 so that the rolling elements 128 engage the races 174, as illustrated in Figures 9(b) and 9(c), the curved flange 190 of each outer runner 182 is located beneath the curved flange 150 of a respective outer rail 142, as illustrated in Figures 9(b) and 10(b), and the curved flange 186 of each inner runner 180 is located

beneath the curved flange 146 of a respective inner rail 140, as illustrated in Figures 9(b), 10(b) and 10(c).

With the tilt plate 170 positioned centrally on the intermediary base member 40, the upper base member 42 is lowered on to the tilt plate 170 so that the stop members 168 are located within the apertures 172 of the tilt plate 170, and the tilt plate 170 is housed within the recess of the upper base member 42. The intermediary base member 40 and the upper base member 42 are then inverted, and the base member 40 displaced along the direction of the axis X to reveal a first plurality of apertures 194a located on the tilt plate 170. Each of these apertures 194a is aligned with a tubular protrusion 196a on the base 164 of the upper base member 42. A self-tapping screw is screwed into each of the apertures 194a to enter the underlying protrusion 196a, thereby partially connecting the tilt plate 170 to the upper base member 42. The intermediary base member 40 is then displaced in the reverse direction to reveal a second plurality of apertures 194b located on the tilt plate 170. Each of these apertures 194b is also aligned with a tubular protrusion 196b on the base 164 of the upper base member 42. A self-tapping screw is screwed into each of the apertures 194b to enter the underlying protrusion 196b to complete the connection of the tilt plate 170 to the upper base member 42.

When the upper base member 42 is attached to the intermediary base member 40 and the bottom surface 43 of the lower base member 38 positioned on a support surface, the upper base member 42 is supported by the rolling elements 128 of the support members 120. The resilient elements 130 of the support members 120 urge the rolling elements 128 away from the closed lower ends 126 of the support members 120 by a distance which is sufficient to inhibit scraping of the upper surfaces of the intermediary base member 40 when the upper base member 42 is tilted. For example, as illustrated in each of Figures 9(b), 9(c), 10(b) and 10(c) the lower end 162 of the upper base member 42 is urged away from the upper surface 104 of the intermediary base member 40 to prevent contact therebetween when the upper base member 42 is tilted. Furthermore, the action of the resilient elements 130 urges the concave upper surfaces of the curved

flanges 186, 190 of the runners against the convex lower surfaces of the curved flanges 146, 150 of the rails.

To tilt the upper base member 42 relative to the intermediary base member 40, the user slides the upper base member 42 in a direction parallel to the axis X to move the upper base member 42 towards one of the fully tilted positions illustrated in Figures 5(b) and 5(c), causing the rolling elements 128 move along the races 174. Once the upper base member 42 is in the desired position, the user releases the upper base member 42, which is retained in the desired position by frictional forces generated through the contact between the concave upper surfaces of the curved flanges 186, 190 of the runners and the convex lower surfaces of the curved flanges 146, 150 of the rails acting to resist the movement under gravity of the upper base member 42 towards the untilted position illustrated in Figure 5(a). The fully titled positions of the upper base member 42 are defined by the abutment of one of each pair of stop members 168 with a respective inner rail 140.

To operate the fan assembly 10 the user depresses an appropriate one of the buttons 20 on the base 12, in response to which the controller 44 activates the motor 56 to rotate the impeller 52. The rotation of the impeller 52 causes a primary air flow to be drawn into the base 12 through the air inlets 18. Depending on the speed of the motor 56, the primary air flow may be between 20 and 30 litres per second. The primary air flow passes sequentially through the impeller housing 64, the upper end of the upper base member 42 and open upper end of the motor bucket retainer 63 to enter the interior passage 86 of the nozzle 14. The primary air flow emitted from the air outlet 71 is in a forward and upward direction. Within the nozzle 14, the primary air flow is divided into two air streams which pass in opposite directions around the central opening 24 of the nozzle 14. Part of the primary airflow entering the nozzle 14 in a sideways direction passes into the interior passage 86 in a sideways direction without significant guidance, another part of the primary airflow entering the nozzle 14 in a direction parallel to the X axis is guided by the curved vane 65a, 65b of the motor bucket retainer 63 to enable the air flow to pass into the interior passage 86 in a sideways direction. The vane 65a, 65b

enables air flow to be directed away from a direction parallel to the X axis. As the air streams pass through the interior passage 86, air enters the mouth 26 of the nozzle 14. The air flow into the mouth 26 is preferably substantially even about the opening 24 of the nozzle 14. Within each section of the mouth 26, the flow direction of the portion of the air stream is substantially reversed. The portion of the air stream is constricted by the tapering section of the mouth 26 and emitted through the outlet 98.

The primary air flow emitted from the mouth 26 is directed over the Coanda surface 28 of the nozzle 14, causing a secondary air flow to be generated by the entrainment of air from the external environment, specifically from the region around the outlet 98 of the mouth 26 and from around the rear of the nozzle 14. This secondary air flow passes through the central opening 24 of the nozzle 14, where it combines with the primary air flow to produce a total air flow, or air current, projected forward from the nozzle 14. Depending on the speed of the motor 56, the mass flow rate of the air current projected forward from the fan assembly 10 may be up to 400 litres per second, preferably up to 600 litres per second, and the maximum speed of the air current may be in the range from 2.5 to 4 m/s.

The even distribution of the primary air flow along the mouth 26 of the nozzle 14 ensures that the air flow passes evenly over the diffuser surface 30. The diffuser surface 30 causes the mean speed of the air flow to be reduced by moving the air flow through a region of controlled expansion. The relatively shallow angle of the diffuser surface 30 to the central axis X of the opening 24 allows the expansion of the air flow to occur gradually. A harsh or rapid divergence would otherwise cause the air flow to become disrupted, generating vortices in the expansion region. Such vortices can lead to an increase in turbulence and associated noise in the air flow which can be undesirable, particularly in a domestic product such as a fan. The air flow projected forwards beyond the diffuser surface 30 can tend to continue to diverge. The presence of the guide surface 32 extending substantially parallel to the central axis X of the opening 30 further converges the air flow. As a result, the air flow can travel efficiently out from

the nozzle 14, enabling the air flow can be experienced rapidly at a distance of several metres from the fan assembly 10.

The invention is not limited to the detailed description given above. Variations will be apparent to the person skilled in the art.

For example, the silencing member and silencing components such as silencing or acoustic foam may be formed in any shape or have any suitable construction, for example the density and type of foam may be altered. The motor bucket retainer and the sealing member may have a different size and/or shape to that described above and may be located in a different position within the fan assembly. The technique of creating an air tight seal with the sealing member may be different and may include additional elements such as glue or fixings. The sealing member, the guide portion, the vanes and the motor bucket retainer may be formed from any material with suitable strength and flexibility or rigidity, for example foam, plastics, metal or rubber. The movement of the upper base member 42 relative to the base may be motorised, and actuated by user through depression of one of the buttons 20.

CLAIMS

1. A fan assembly for creating an air current, the fan assembly comprising:

a base comprising an outer casing having a side wall comprising at least one air inlet, the outer casing housing an impeller housing comprising an air inlet and an air outlet, an impeller located within the impeller housing, a motor for driving the impeller about an axis to create an air flow through the impeller housing, and a silencing member located beneath the air inlet of the impeller housing; and

a nozzle mounted on the base, the nozzle comprising an interior passage for receiving the air flow from the air outlet of the impeller housing and a mouth through which the air flow is emitted from the fan assembly;

characterized in that the silencing member is spaced from the air inlet of the impeller housing along said axis by a distance in the range from 5 mm to 60 mm, and in that the nozzle extends about a nozzle axis to define an opening through which air from outside the fan assembly is drawn by the air flow emitted from the mouth.

2. A fan assembly as claimed in claim 1, wherein the axis about which the impeller is driven is substantially vertical when the base is located on a horizontal surface.

3. A fan assembly as claimed in claim 1 or claim 2, wherein the silencing member is spaced from the air inlet of the impeller housing by a distance in the range from 10 mm to 20 mm.

4. A fan assembly as claimed in any preceding claim, wherein the silencing member comprises acoustic foam.

5. A fan assembly as claimed in any preceding claim, wherein the base is substantially cylindrical.

6. A fan assembly as claimed in any preceding claim, wherein said at least one air inlet to the outer casing is arranged substantially orthogonal to said nozzle axis.

7. A fan assembly as claimed in any preceding claim, wherein said at least one air inlet to the outer casing comprises a plurality of air inlets extending about a second axis substantially orthogonal to said nozzle axis.

8. A fan assembly as claimed in any of the preceding claims, comprising a flow path extending from each air inlet of the outer casing to the air inlet of the impeller housing, wherein the air inlet of the impeller housing is substantially orthogonal to the or each air inlet of the outer casing.

9. A fan assembly as claimed in any preceding claim, comprising a second silencing member located within the impeller housing.

10. A fan assembly as claimed in claim 9, wherein the second silencing member is annular.

11. A fan assembly as claimed in claim 9 or claim 10, wherein the second silencing member comprises acoustic foam.

12. A fan assembly as claimed in any preceding claim, wherein the nozzle comprises a Coanda surface located adjacent the mouth and over which the mouth is arranged to direct the air flow.

13. A fan assembly as claimed in claim 12, wherein the nozzle comprises a diffuser located downstream of the Coanda surface.

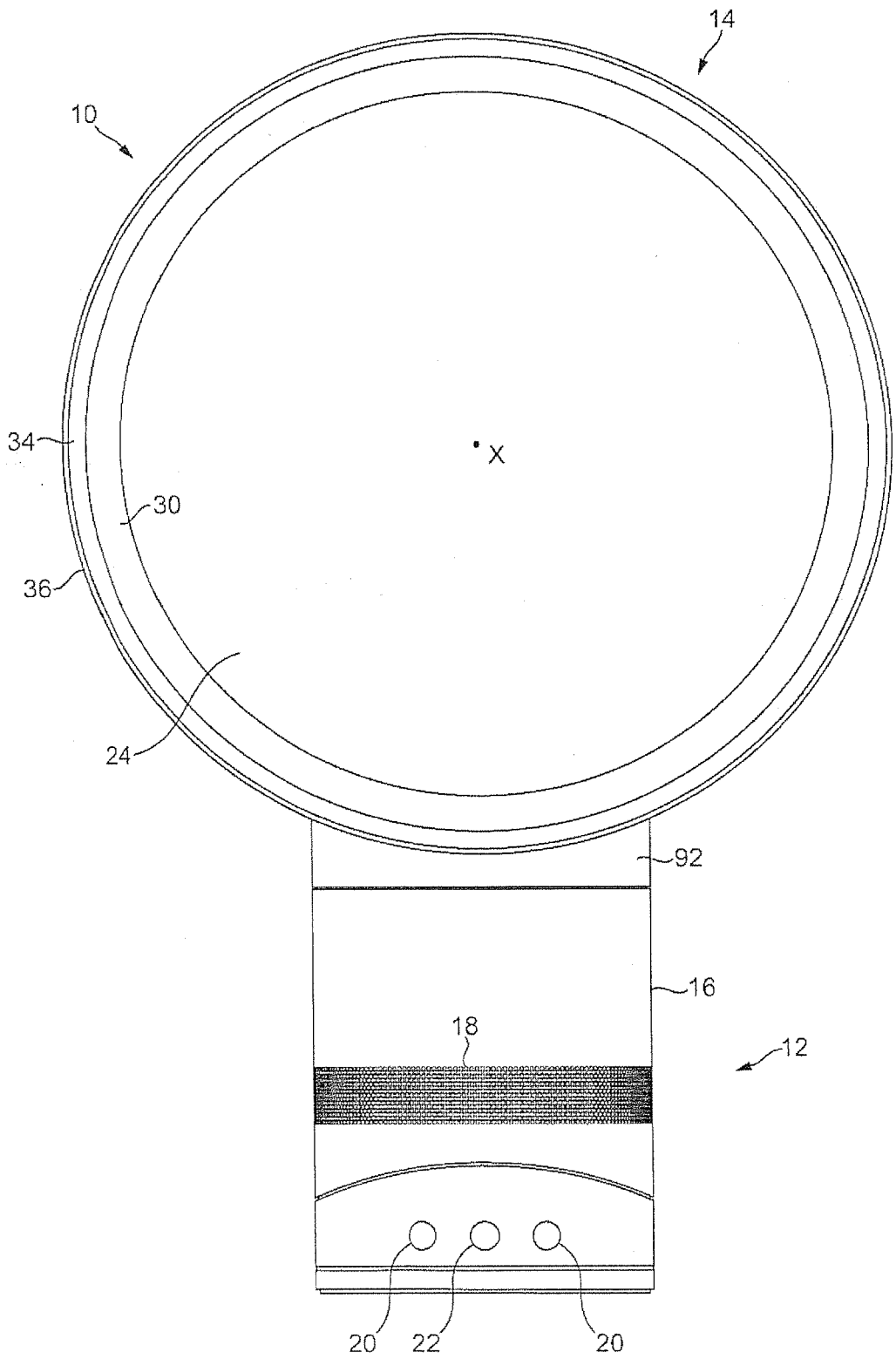

FIG. 1

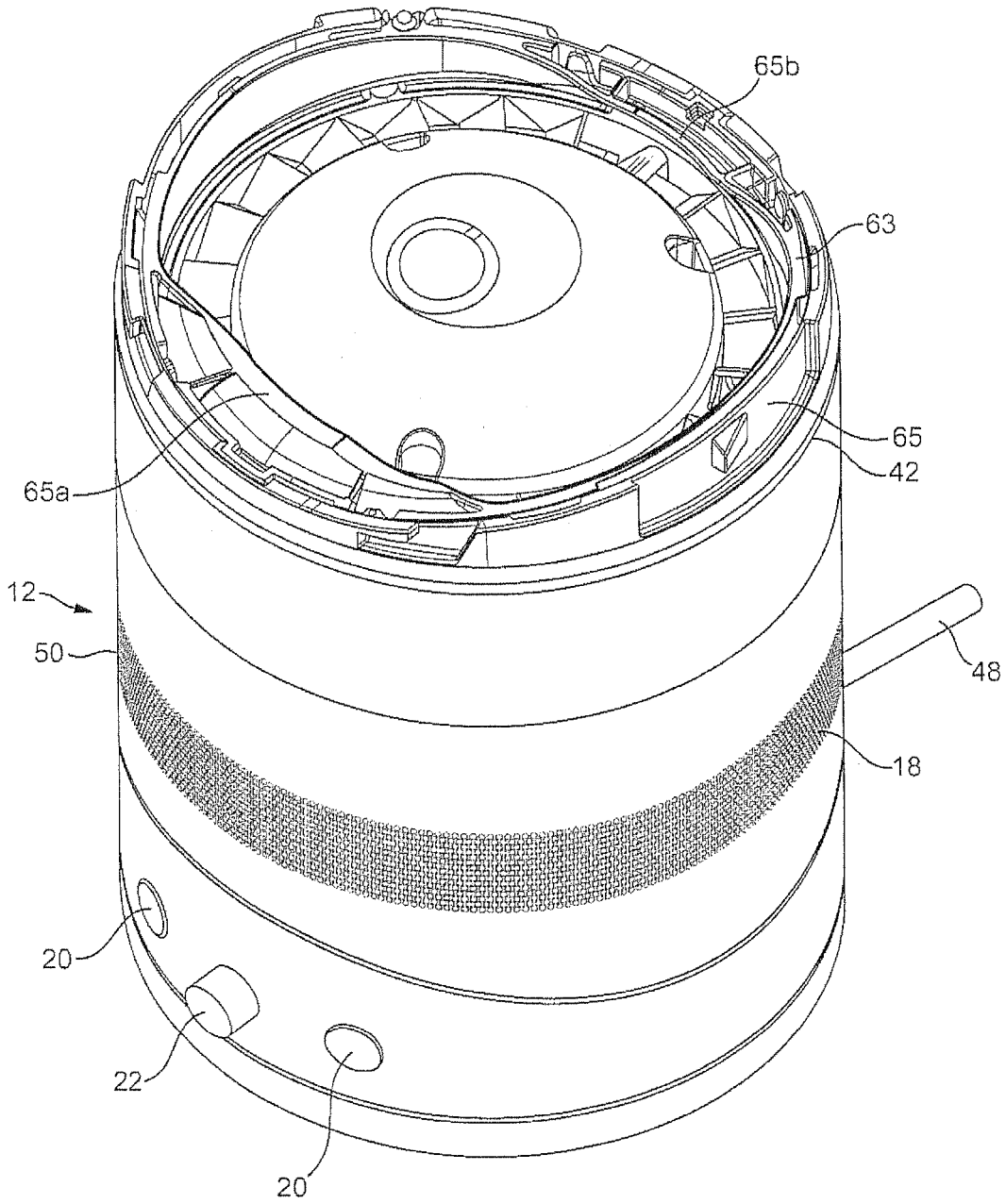

FIG. 2a

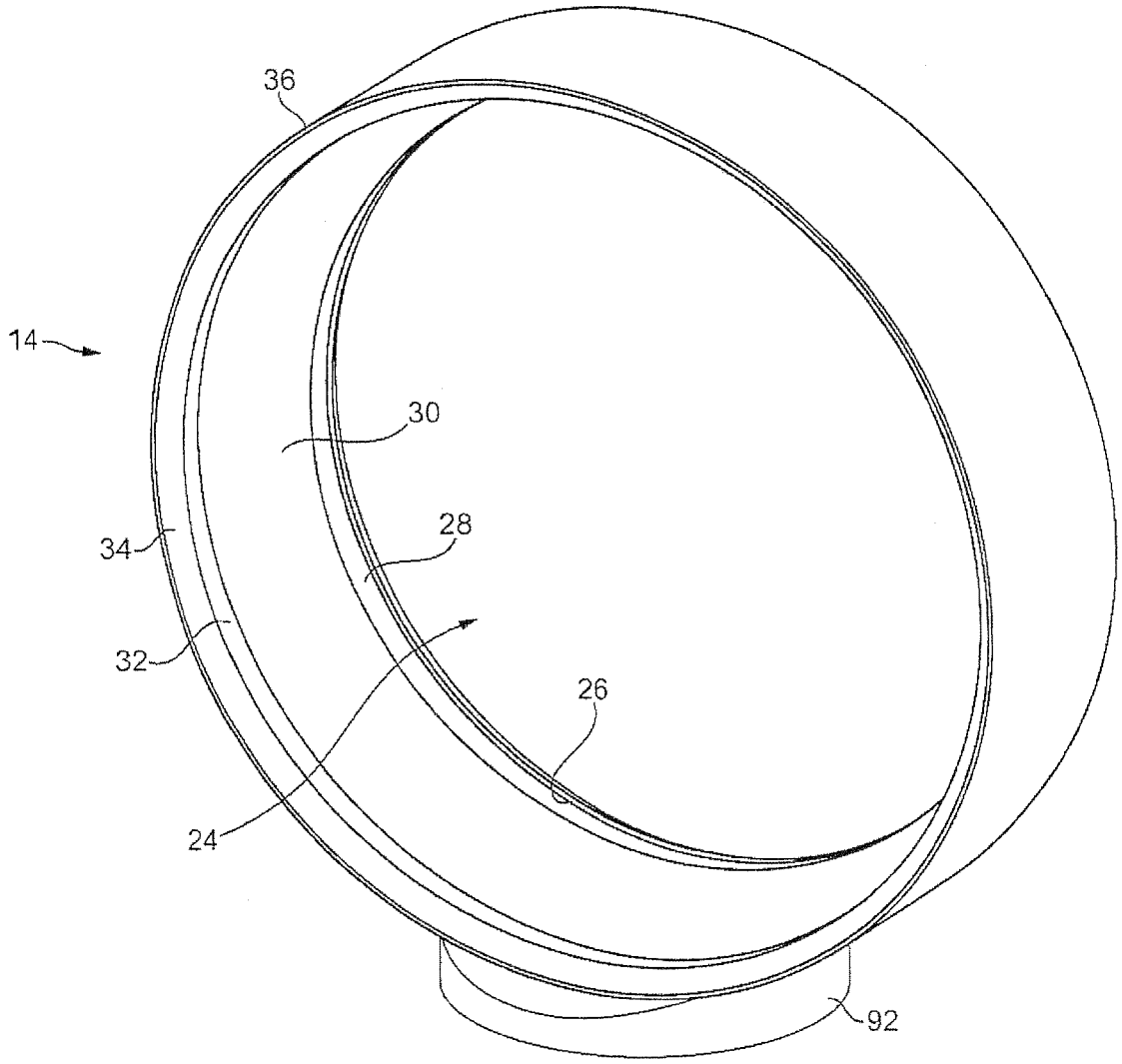

FIG. 2b

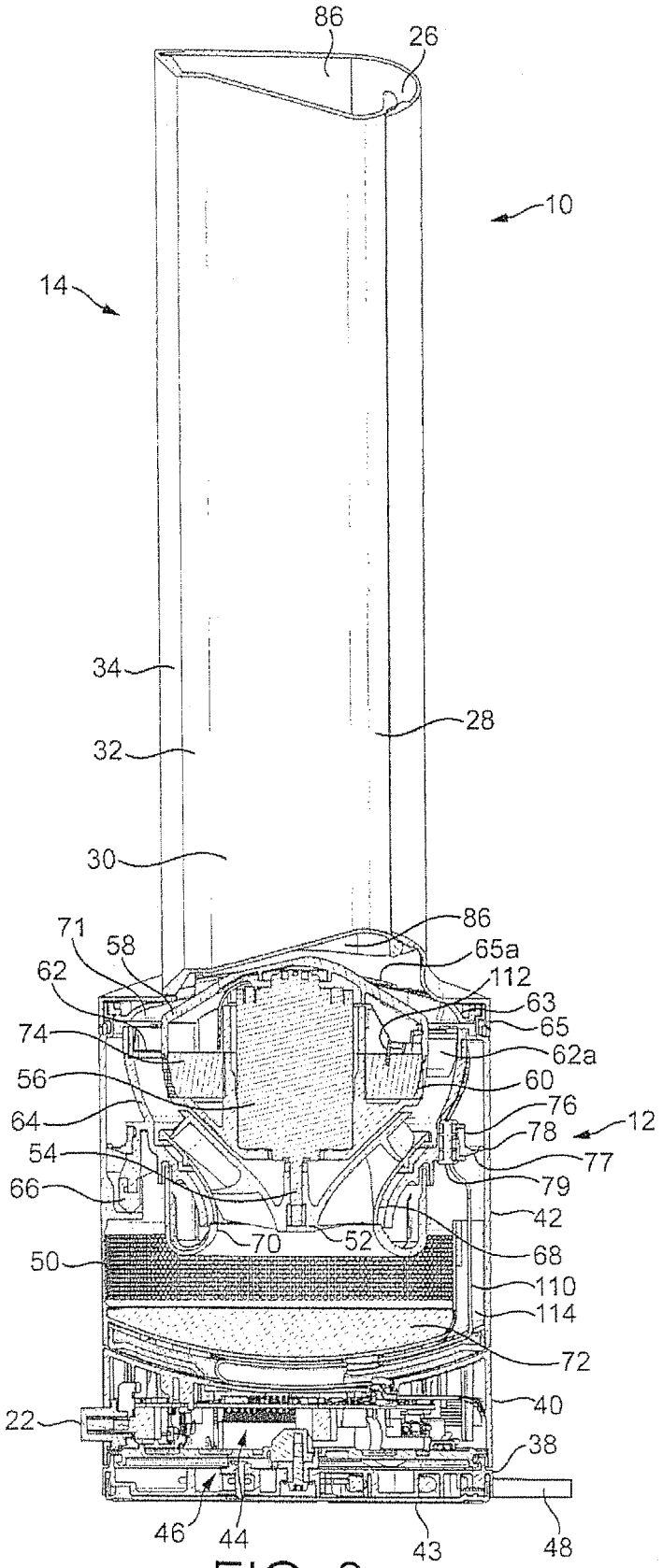
86
26
10
14
34
28
32
30
86
71
58
65a
62
112
63
65
74
62a
56
60
76
64
78
12
54
77
66
79
42
70
52
68
50
110
114
72
40
22
38
46
44
43
48

FIG. 3

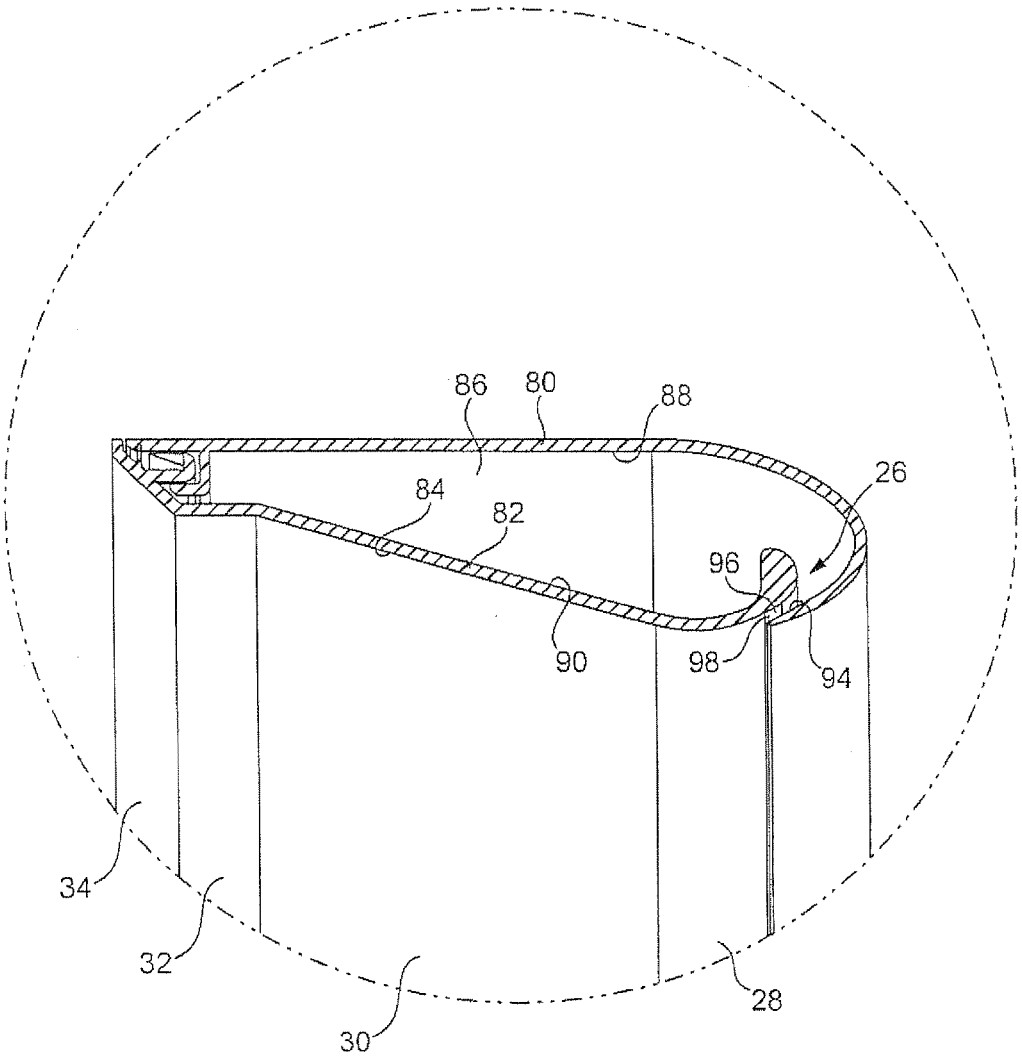

FIG. 4

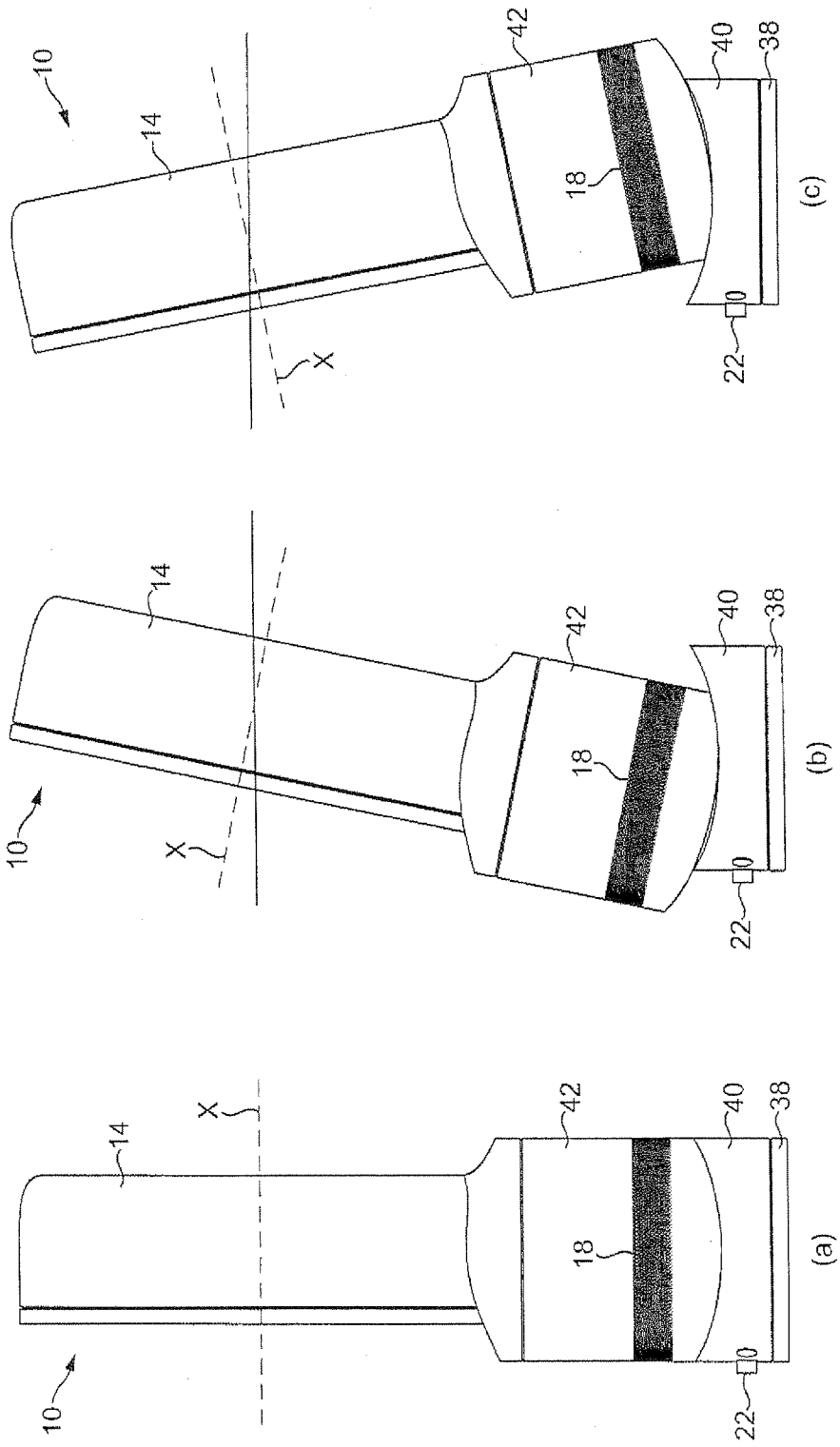

FIG. 5

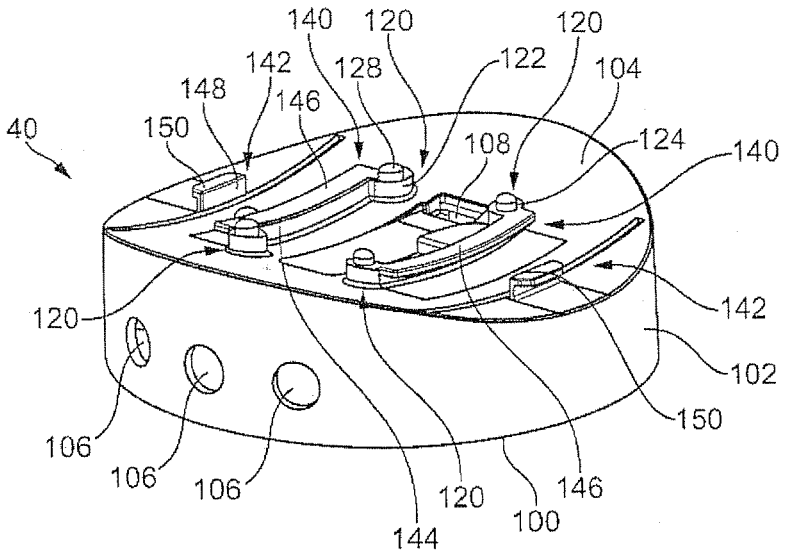
40
140
120
120
142
128
122
104
148
146
150
108
124
140
120
142
102
150
106
106
106
120
144
146
100

FIG. 6

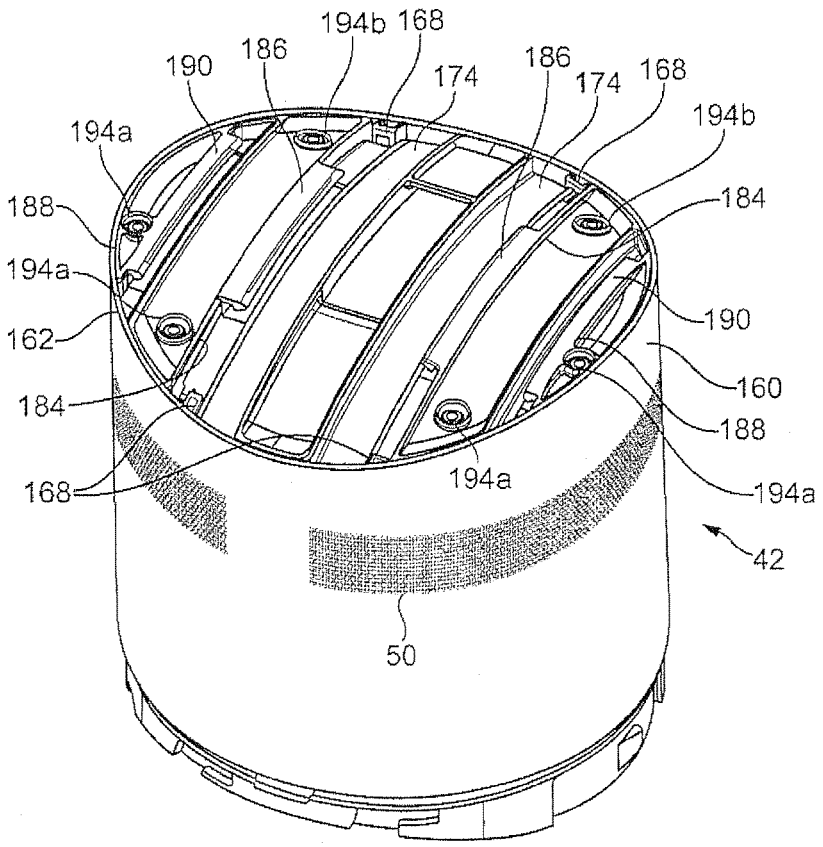
194b
168
190
186
174
186
174
168
194b
194a
188
184
194a
190
162
160
184
188
168
194a
194a
42
50

FIG. 7

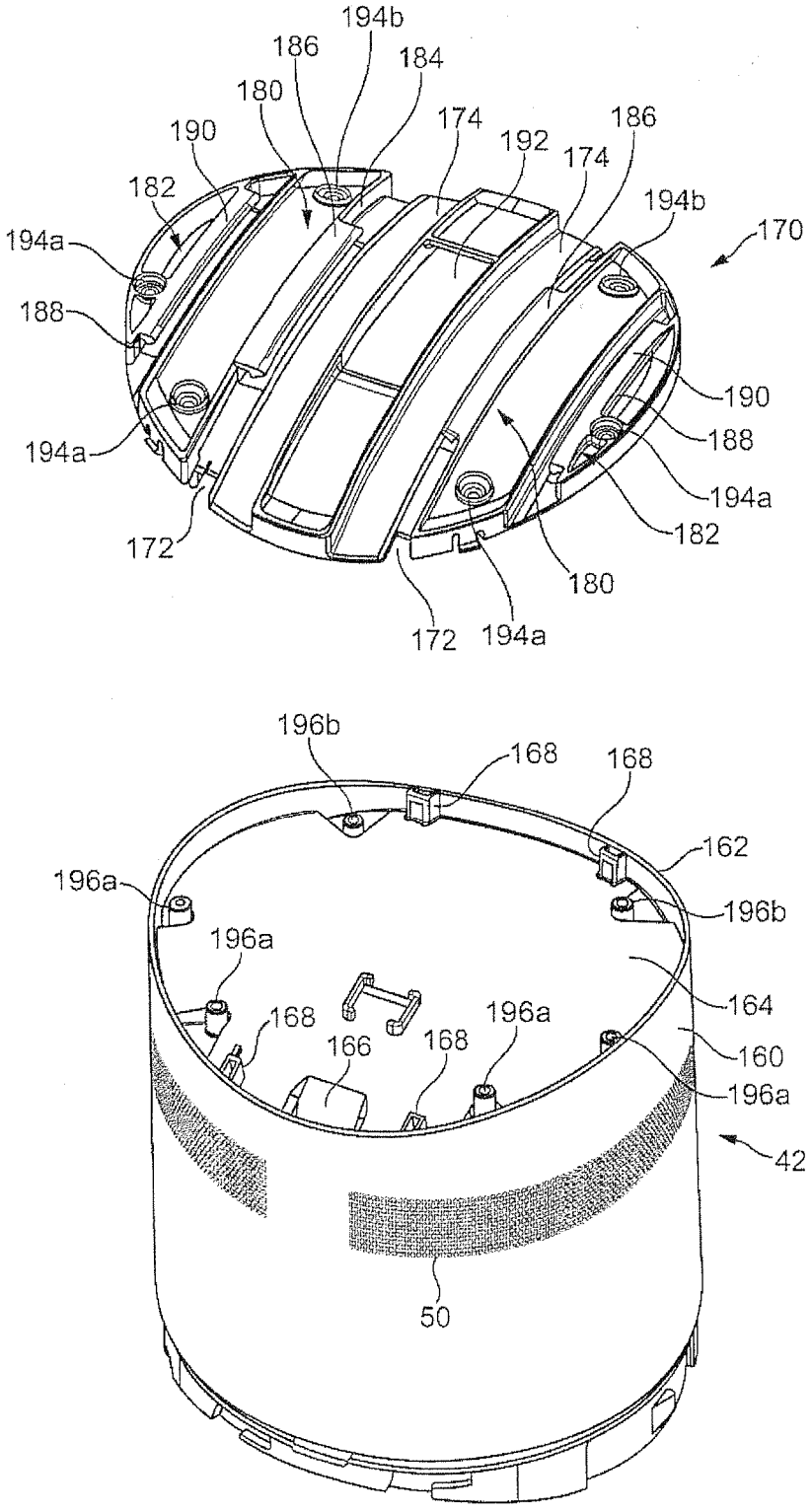
194b
186
184
180
190
174
192
174
186
182
194b
170
194a
188
190
188
194a
194a
182
172
180
172
194a
196b
168
168
162
196a
196b
196a
164
168
166
168
196a
160
196a
42
50

FIG. 8

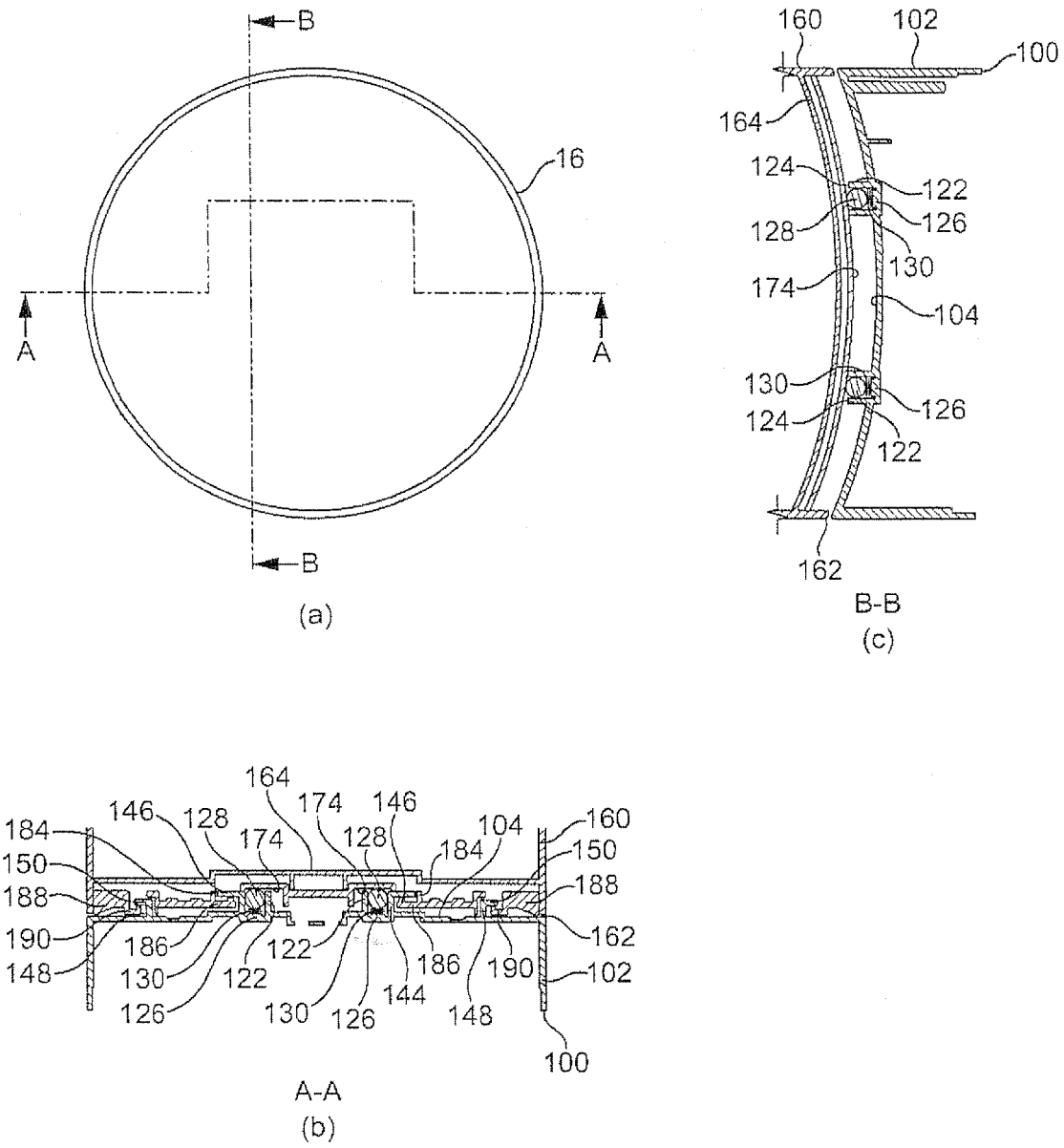
B
16
A
A
B
(a)
160
102
100
164
124
122
128
126
130
174
104
130
126
124
122
162
B-B
(c)
164
174
146
146
128
174
128
104
160
184
184
150
150
188
188
190
186
122
162
148
130
122
186
190
102
126
130
126
144
148
100
A-A
(b)

FIG. 9

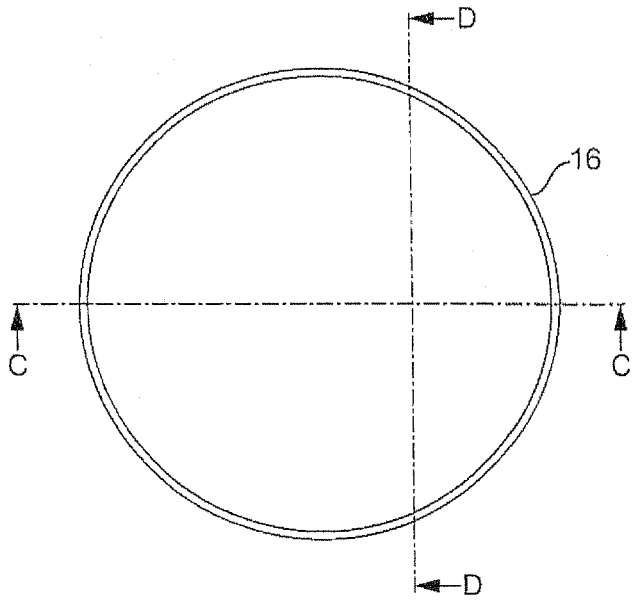

(a)

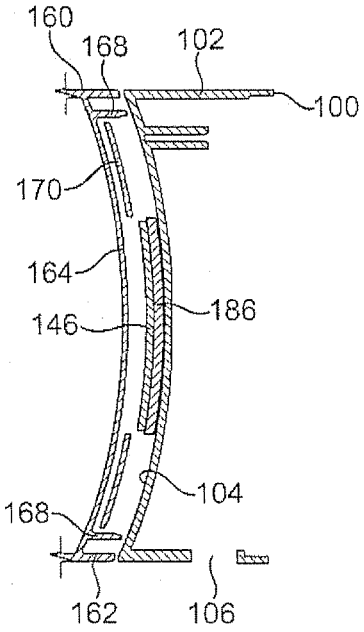

D-D

(c)

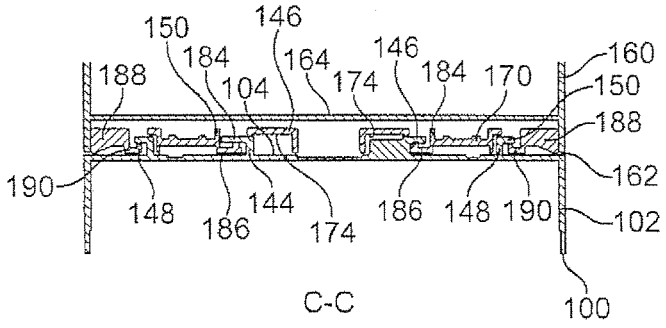

C-C

(b)

FIG. 10