PCT WORLD INTELLECTUAL PROPERTY ORGANIZATION
International Bureau

INTERNATIONAL APPLICATION PUBLISHED UNDER THE PATENT COOPERATION TREATY (PCT)

(51) International Patent Classification 6 : A61M 39/02

A1

(11) International Publication Number: **WO 95/19200**

(43) International Publication Date: 20 July 1995 (20.07.95)

(21) International Application Number: PCT/US95/00705

(22) International Filing Date: 17 January 1995 (17.01.95)

(30) Priority Data:
08/183,151 18 January 1994 (18.01.94) US

(71)(72) Applicants and Inventors: FINCH, Charles, David, Jr. [US/US]; 112 Water Oaks Drive, Clinton, MS 39056 (US). KUIPER, Hendrik, Klaas [US/US]; P.O. Box 348, Edwards, MS 39066 (US).

(74) Agent: DARDEN, Allen, D.; P.O. Box 4412, Baton Rouge, LO 70821 (US).

(81) Designated States: AU, CA, CN, JP, KR, MX, RU, European patent (AT, BE, CH, DE, DK, ES, FR, GB, GR, IE, IT, LU, MC, NL, PT, SE).

Published
With international search report.
Before the expiration of the time limit for amending the claims and to be republished in the event of the receipt of amendments.

(54) Title: IMPLANTABLE VASCULAR DEVICE

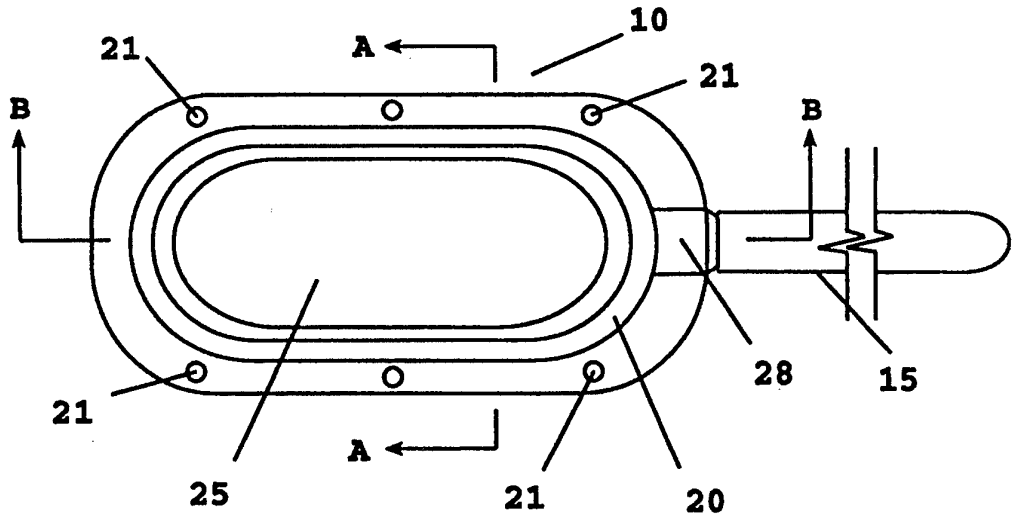

(57) Abstract

An implantable device grafted directly to vascular structures for high volume blood and/or fluid infusion and/or removal for such purpose as hemodialysis, apheresis, exchange transfusion, or large volume fluid infusion. The device is also adaptable to intermittent access to the venous or arterial circulations for purpose of blood sampling or giving medications. The device is comprised of an implantable fluid chamber (25) connected to a cannula (15) which is then grafted directly to the vascular structure (e.g. artery or vein). The vascular end of the cannula (15) employs a valve (17) to prevent reflux of blood and subsequent washout of anticaogulant during periods when the device is not in use. The device is accessed percutaneously through a replaceable diaphragm (27) with a needle or needle-introduced catheter. The implantable fluid chamber (25) and cannula (15) are filled with anti-coagulant prior to needle withdrawal to prevent thrombosis.

FOR THE PURPOSES OF INFORMATION ONLY

Codes used to identify States party to the PCT on the front pages of pamphlets publishing international applications under the PCT.

AT	Austria	**GB**	United Kingdom	**MR**	Mauritania
AU	Australia	**GE**	Georgia	**MW**	Malawi
BB	Barbados	**GN**	Guinea	**NE**	Niger
BE	Belgium	**GR**	Greece	**NL**	Netherlands
BF	Burkina Faso	**HU**	Hungary	**NO**	Norway
BG	Bulgaria	**IE**	Ireland	**NZ**	New Zealand
BJ	Benin	**IT**	Italy	**PL**	Poland
BR	Brazil	**JP**	Japan	**PT**	Portugal
BY	Belarus	**KE**	Kenya	**RO**	Romania
CA	Canada	**KG**	Kyrgystan	**RU**	Russian Federation
CF	Central African Republic	**KP**	Democratic People's Republic of Korea	**SD**	Sudan
CG	Congo			**SE**	Sweden
CH	Switzerland	**KR**	Republic of Korea	**SI**	Slovenia
CI	Côte d'Ivoire	**KZ**	Kazakhstan	**SK**	Slovakia
CM	Cameroon	**LI**	Liechtenstein	**SN**	Senegal
CN	China	**LK**	Sri Lanka	**TD**	Chad
CS	Czechoslovakia	**LU**	Luxembourg	**TG**	Togo
CZ	Czech Republic	**LV**	Latvia	**TJ**	Tajikistan
DE	Germany	**MC**	Monaco	**TT**	Trinidad and Tobago
DK	Denmark	**MD**	Republic of Moldova	**UA**	Ukraine
ES	Spain	**MG**	Madagascar	**US**	United States of America
FI	Finland	**ML**	Mali	**UZ**	Uzbekistan
FR	France	**MN**	Mongolia	**VN**	Viet Nam
GA	Gabon				

Description

Implantable Vascular Device

Technical Field

The present invention relates to implantable vascular devices for the purpose of access to the body's circulation. More particularly, this invention provides a novel means for intermittent vascular access without the use of indwelling catheters or constant flow shunt structures thus reducing the thrombotic and hemodynamic consequences of other available devices.

Background Art

The advent of hemodialysis for the treatment of End-stage Renal Disease has prompted the development of many vascular access devices for the purpose of acquiring large quantities of blood for passage through an extra-corporeal circuit during the hemodialysis procedure. Available devices have consisted of devices employing indwelling venous catheters or flow through shunt devices which create an artificial fistula between an artery and vein.

Current catheter technologies are limited by relatively poor flows and by their tendency to be irritative resulting in vessel stenosis, thrombosis, and occasionally vessel perforation. They frequently dysfunction for mechanical reasons related to the vessel wall, catheter positioning, or thrombus formation in the catheter lumen. For catheter devices that are partially external, infections are frequent due to the chronic breach in the skin, often with severe or even fatal consequences.

Flow through shunt devices which create a fistulous connection between artery and vein have been the mainstay of modern vascular access for dialysis. These devices are likewise fraught with hazards. Installation of these "shunts" is an extensive surgical procedure resulting in significant tissue trauma and pain. Once in place, the shunts result in additional cardiac output needs with as much as one-fifth of the cardiac output (approximately 1000 ml per minute) required for adequate function. In addition, the transfer of the arterial pressure wave results in damage to the vein at the anastomosis with the shunt resulting in intimal hyperplasia and subsequent shunt occlusion or thrombosis. When this occurs, another vein segment must be used for shunt revision, and exhaustion of available

sites is distressingly common. The expense both in terms of health care dollars and human misery is enormous. Repeated punctures of the wall of the shunt result in eventual failure and surgery to repair or replace the shunt.

Each of the available access technologies mentioned thus far are also complicated by the possibility of recirculation of blood already passed through the extra-corporeal circuit resulting in loss of treatment efficiency. The harm done to patients by the "recirculation syndrome" is insidious and at times undetected until great harm has been done.

Disclosure of Invention

The invention enables one to access both the arterial and venous circulations separately, without fistulous communication, thus eliminating recirculation completely and reducing dramatically the demands on the heart. The increased flow to the venous structures would likewise be greatly reduced as would the damaging pressures transmitted to the vascular wall. The invention does not require indwelling catheters and thus eliminates the complications associated with these devices.

Installation of the invention requires surgical implantation but with far less tissue disruption than shunt devices and has the further advantage of allowing arterial and venous ports at anatomically remote sites. Since the invention is totally subcutaneous, infectious complications encountered by partially external catheter devices are avoided. Also, thrombosis of the distal ends of the invention is prevented eliminating a potential nidus of infection and avoiding occlusion while allowing for blood flows adequate for treatment of blood in extra-corporeal circuits for hemodialysis, apheresis, phototherapy, etc.

Most research to date has focused on applications of catheter technology or implantable devices involving constant arteriovenous flow. The invention is the first to employ direct vascular anastomosis using separate implantable ports while allowing for intermittent flow occurring only during extra-corporeal blood treatment. This also provides a means for intermittent access to both arterial and venous circulations without intrusion into the vessel lumen for such purposes as blood sampling or intermittent infusion.

These ends are accomplished by attaching an implantable access port to an acceptable blood vessel by way of a non-collapsible cannula or shunt segment which is then grafted to the vessel wall usually in an "end to side" manner. At the point of anastomosis the invention

employs a valve device to prevent reflux of blood and the dilution of anti-coagulant when the device is not in use. In its unused state the static nature of the fluid in the device prevents the entry of blood across the valve until the valve is opened and negative or positive pressure is generated by cannulation of the access port.

One embodiment of the invention employs a replaceable dome of penetrable material through which an appropriately designed needle can be placed through the skin and the dome into an underlying chamber which is joined in sequence to a non-collapsible cannula or shunt segment made of PTFE or other suitable material. The vascular end of that segment is joined in sequence to a slit valve device made of Teflon or another suitable material which is, in turn, joined in sequence to the vessel wall, employing a shallow cuff made of PTFE or another suitable material. An alternative construction of this embodiment also employs a flap valve device either in addition to or in place of the slit valve device.

Another embodiment of the invention employs a dual chamber device. One chamber is used for access to the circulation while the other serves as a means to inject sterile fluid for the inflation of a balloon valve residing at the junction of the invention with the vessel wall.

Brief Description of Drawings

FIG. 1 shows a top view of the first embodiment of the present invention.

FIG. 2 shows a side view of the embodiment of FIG. 1.

FIG. 3 shows a cross section of the embodiment of FIG. 1 along line A-A.

FIG. 4 shows a cross section of the embodiment of FIG. 1 along line B-B.

FIG. 5 shows detail of an end of the embodiment of FIG. 1.

FIG. 6 shows a top view of an alternative construction of the embodiment of Fig. 1.

FIG. 7 shows a cross section of an alternative construction of the embodiment of FIG. 1 along line D-D.

FIG. 8 shows a cross section of an alternative construction of the embodiment of FIG. 1 along line B-B.

FIG. 9 shows a cross section of an alternative construction of the embodiment of FIG. 1 along line C-C.

FIG. 10 shows a top view of another embodiment of the present invention.

FIG. 11 shows a side view of the embodiment of FIG. 10.

FIG. 12 shows a cross section of the embodiment of FIG. 10 along line B-B.

FIG. 13 shows a cross section of the embodiment of FIG. 10 along line A-A.

FIG. 14 shows detail of an end of the embodiment of FIG. 10.

Best Mode for Carrying Out the Invention

Referring to FIG. 1 there is depicted a first preferred embodiment of the present invention. This embodiment is an implantable vascular device 10 employing a single hematologic chamber 25. The base and sides of the hematologic chamber 25 are formed by the walls of the body 26 of the device 10. As is best seen in FIGS 2, 3, and 4, the body 26 is shaped so as to define the base and sides of the hematologic chamber 25, and is further shaped to accept a cover 20. The cover 20 serves to hold in position a replaceable diaphragm 27, which forms the top of the hematologic chamber 25. The cover 20 and body 26 are shaped to allow for easy removal of the cover 20 if replacement of the diaphragm 27 is needed. The base of the body 26 is provided with a flange containing a plurality of apertures 21. These apertures 21 are intended to facilitate fastening of the device 10 to the underlying tissues (not shown). Such fastening will typically be by use of sutures, but may be by any suitable method.

An outlet 28 extends from the hematologic chamber 25 and serves to connect the chamber 25 with a cannula 15. The cannula 15 connects the hematologic chamber 25 to the chosen vascular structure, which may be an artery or a vein. As is best seen in FIG. 5, a slit valve 17 is provided near the end of the cannula 15. The slit valve 17 typically consists of a flat membrane of compliant material which occupies the lumen of the cannula 15. A diametrical incision or slit is located in the membrane of the slit valve 17. A cuff 16 is provided distal to the slit valve 17 at the end of the cannula 15 to facilitate the suturing of the cannula 15 to the chosen vascular structure. The cuff 16 is usually approximately 2 mm in width, but may be of any width sufficient to allow for connection of the cannula 15 to the chosen vascular structure.

The body 26 of the device 10 may be manufactured of surgical metal. Other materials of manufacture are acceptable provided they are compatible with the person or animal into which the device 10 is implanted, and do not adversely affect the tissues to which

the device 10 is attached. Additionally, the body 26 should be manufactured of a material of sufficient hardness to resist being damaged or gouged by needles or other devices which will be inserted through the diaphragm 27 into the hematologic chamber 25. The diaphragm 27 should be manufactured of a material tolerant of multiple penetrations with needles or needle-introduced catheters without sacrificing the integrity of the diaphragm 27. The cannula 15 may be manufactured of PTFE, or other suitable material which is compatible with the surrounding tissues and is resistant to collapse. The cuff 16 is preferably manufactured of the same material as the cannula 15, but most importantly must be compatible with the chosen vascular structure to which it is connected. The slit valve 17 is preferably manufactured of the same material as the cannula 15, but may be manufactured of any suitable material which has sufficient flexibility to allow passage of fluid through the lumen of the cannula 15 when a pressure differential exists between the chosen vascular structure and the hematologic chamber 25, but which will also retard flow or diffusion through the lumen of the cannula 15 when no significant pressure differential exists.

The implantable vascular device 10 is used by surgically implanting the device 10 such that it is entirely subcutaneous. The distal end of the cannula 15 is connected to the chosen vascular structure. When connected to an artery or vein, the connection is usually made by grafting the cannula 15 to the artery or vein in an "end to side" manner. The connection is usually made by suturing the cuff 16 to the wall of the chosen artery or vein. The body 26 of the device 10 is attached to subcutaneous tissues to prevent undesired movement of the device 10. This is usually achieved by suturing the body 26 of the device 10 to the underlying tissue using the apertures 21. When implanted the hematologic chamber 25 of the device is filled with an anti-coagulant fluid. The slit valve 17 prevents dilution of the anti-coagulant fluid at the point of anastomosis by the blood present in the chosen artery or vein. Depending upon the frequency of use, the device may be used without a slit valve 17 or other device to prevent dilution of the anti-coagulant present in the hematologic chamber 25. During nonuse of the device there is no flow through the chamber 25, and dilution of the anti-coagulant at the point of anastomosis may occur at a slow enough rate to avoid the need for a slit valve 17 or similar apparatus if use of the device 10 is of sufficient frequency. However, use of the slit valve 17 or similar apparatus reduces the risk of thrombosis near the point of anastomosis.

After surgical implantation, the device is used by percutaneously accessing the hematologic chamber 25 through the diaphragm 27 with a needle or needle-introduced catheter. Blood may then be withdrawn from the chosen artery or vein by reducing the pressure in the hematologic chamber 25 until blood in the chosen artery or vein forces its way past the slit valve 17 into the hematologic chamber 25, and then into the needle or needle-introduced catheter penetrating the diaphragm 27. Blood or other fluid may be supplied to the person or animal into which the device 10 has been implanted by increasing the pressure in the hematologic chamber 25 until the blood or other fluid forces its way past the slit valve into the chosen artery or vein. After the blood or other fluid transfer is completed the hematologic chamber 25 is filled with anti-coagulant fluid. This serves to discourage occlusion of the cannula 15 which could be brought about by thrombosis at the point of anastomosis.

The present invention is particularly well suited for use in hemodialysis. For such use two devices 10 are surgically implanted. One of the devices is grafted to an artery. The other device is grafted to a vein. In this manner both the venous and arterial circulations are accessed separately, without fistulous communication. Current use of shunts, which create a fistulous connection between artery and vein, not only involve a more extensive surgical procedure, but are fraught with problems including increased cardiac output requirements, damage to the vein due to arterial pressure waves, and frequent shunt occlusion or thrombosis. During hemodialysis, blood is removed from the hematologic chamber 25 of the device 10 grafted to an artery and is subjected to the extra-corporeal dialysis circuit. The treated blood is returned to the hematologic chamber 25 of the device 10 grafted to a vein. At the completion of the dialysis treatment both hematologic chambers 25 are filled with anti-coagulant fluid and the needles or needle-introduced catheters are removed. A similar process may be used for apheresis or exchange transfusion procedures. Additionally, the device 10 may be used for frequent administration of medication into artery or vein, or for large volume fluid infusions.

Referring to FIGS. 6 through 9, there is depicted an alternative construction of the first embodiment of the present invention. This construction of the invention employs a flap valve device 60 comprised of two sheets of compliant material 62 layered upon each other and bonded to each other along their lateral edges. This configuration allows for creation

of an opening 63 between the two sheets of compliant material 62, within the cannula 15, which is created when positive pressure is achieved within the hematologic chamber or when the flap valve 60 is traversed by a percutaneous needle or needle-introduced catheter. Obliteration of the opening 63 and thus closure of the flap valve 60 is achieved by reversal of the pressure gradient attended by removal of the percutaneous needle or needle-introduced catheter and exertion of extravascular pressure upon the extralumenal portions 64 of the flap valve 60. Use of the flap valve 60 may be in conjunction with the slit valve 17, shown in FIG. 5. The hematologic chamber 25 and connecting cannula 15 are filled with anticoagulant material when not in use, with the flap valve 60 and/or the slit valve 17 preventing washout of the anticoagulant material.

Referring to FIGS. 10 through 14, there is depicted another embodiment of the present invention. In this device 30 a balloon valve 52 is substituted for the slit valve 17 of the previously described embodiment. The balloon valve is connected to a hydraulic chamber 40 defined by the body 45 of the device 30. The hydraulic chamber 40 is connected to the balloon valve 52 by a coaxial channel 46 which enters the cannula 15 and connects to the balloon valve 52. The balloon valve is inflated or deflated by the introduction or removal of sterile fluid from the hydraulic chamber 40 by means of a needle percutaneously inserted through the hydraulic chamber diaphragm 47 into the hydraulic chamber 40. The balloon valve 52 occludes the lumen of the cannula 15 when inflated. Other aspects of this embodiment of the invention are similar to those described for the other preferred embodiment.

It is intended that the foregoing detailed description be regarded as illustrative rather than limiting and that it is understood that the following claims including all equivalents are intended to define the scope of the invention.

Claims

We claim:

1. An implantable vascular device comprising;

a hematologic chamber,

means to access said hematologic chamber with a needle or needle-introduced catheter, and

means to hydraulically connect said hematologic chamber with a vascular structure without the use of an indwelling catheter,

whereby fluids may be introduced into or withdrawn from the vascular structure by increasing or decreasing the pressure in said hematologic chamber using a needle or needle-introduced catheter.

2. An implantable vascular device as in claim 1 wherein said means to access said hematologic chamber comprises a needle-penetrable diaphragm which forms a wall of said hematologic chamber, said diaphragm being tolerant of multiple penetrations with needles or needle-introduced catheters without sacrificing the integrity of said diaphragm.

3. An implantable vascular device as in claim 1 wherein said means to hydraulically connect comprises;

outlet means from said hematologic chamber, and

a cannula, one end of which is connected to said outlet means from said hematologic chamber, and the other end of which is grafted to the vascular structure, whereby said hematologic chamber is in hydraulic communication with the vascular structure.

4. An implantable vascular device as in claim 3 further comprising valve means in said cannula whereby hydraulic communication between said hematologic chamber and the vascular structure is prevented during nonuse of said implantable vascular device.

5. An implantable vascular device as in claim 4 wherein said valve is located approximately 2 millimeters from the end of said cannula to be grafted to the vascular structure, whereby said approximately 2 millimeters of said cannula may be used in grafting said cannula to the vascular structure by suturing.

6. An implantable vascular device as in claim 4 wherein said valve means further comprises a flat membrane of compliant material which occupies the lumen of said cannula and which contains a diametrical incision located in said flat membrane whereby passage of fluid through the lumen of said cannula is allowed when a pressure differential exists between the vascular structure and said hematologic chamber, but whereby passage of fluid through the lumen of said cannula is discouraged when no significant pressure differential exists between the vascular structure and said hematologic chamber.

7. An implantable vascular device as in claim 4 wherein said valve means further comprises,

a hydraulic chamber,

a needle-penetrable hydraulic chamber diaphragm which forms a wall of said hydraulic chamber, said hydraulic chamber diaphragm being tolerant of multiple penetrations with needles or needle-introduced catheters without sacrificing the integrity of said hydraulic chamber diaphragm,

a balloon apparatus located in the lumen of said cannula, and

a coaxial channel hydraulically connecting said hydraulic chamber and said balloon apparatus,

whereby said balloon apparatus may be inflated or deflated by the introduction or removal of fluid from said hydraulic chamber by means of a needle inserted through said hydraulic chamber diaphragm into said hydraulic chamber, and further whereby said balloon apparatus occludes the lumen of said cannula when inflated.

8. An implantable vascular device as in claim 4 wherein said valve means in said cannula further comprises two sheets of compliant material located within said cannula, said two sheets layered upon each other, bonded to each other along their lateral edges,

and circumferentially affixed to the interior surfaces of said outlet means, whereby an opening may be created between said two sheets of compliant material when positive pressure is achieved within said hematologic chamber or when said two sheets of compliant material are traversed by a percutaneous needle or needle-introduced catheter, and whereby obliteration of said opening and closure of said valve means may be achieved by reversal of the pressure gradient attended by removal of any percutaneous needle or needle-introduced catheter traversing said two sheets of compliant material, and exertion of extravascular pressure upon the extralumenal portions of said opening created between said two sheets of compliant material.

9. An implantable vascular device as in claim 4 wherein said valve means in said cannula further comprises;

two sheets of compliant material located within said cannula, said two sheets layered upon each other, bonded to each other along their lateral edges, and circumferentially affixed to the interior surfaces of said outlet means, whereby a opening may be created between said two sheets of compliant material when positive pressure is achieved within said hematologic chamber or when said two sheets of compliant material are traversed by a percutaneous needle or needle-introduced catheter, and whereby obliteration of said opening may be achieved by reversal of the pressure gradient attended by removal of any percutaneous needle or needle-introduced catheter traversing said two sheets of compliant material, and exertion of extravascular pressure upon the extralumenal portions of said opening created between said two sheets of compliant material; and

a flat membrane of compliant material, located proximate the end of said cannula to be grafted to the vascular structure, which occupies the lumen of said cannula and which contains a diametrical incision located in said flat membrane whereby passage of fluid through said diametrical incision is allowed when a pressure differential exists between the vascular structure and said hematologic chamber, but whereby passage of fluid through said diametrical incision is discouraged when no significant pressure differential exists between the vascular structure and said hematologic chamber.

10. An implantable vascular device as in claim 1 further comprising means for attaching said hematologic chamber to subcutaneous tissues whereby said hematologic chamber is maintained in a fixed location.

11. An implantable vascular device as in claim 10 wherein said means for attaching further comprises a flange incorporated externally into a wall of said hematologic chamber, said flange containing a plurality of apertures of sufficient dimension to accommodate sutures, whereby said hematologic chamber may be attached to subcutaneous tissues by suturing said flange to subcutaneous tissues using said apertures.

12. A method for using an implantable vascular device in a living being, the implantable vascular device including a hematologic chamber containing a needle-penetrable diaphragm which forms a wall of said hematologic chamber, said diaphragm being tolerant of multiple penetrations with needles or needle-introduced catheters without sacrificing the integrity of said diaphragm, said hematologic chamber being connected to one end of a cannula, the other end of said cannula being grafted to a vascular structure, whereby said hematologic chamber is in hydraulic communication with the vascular structure, said cannula containing valve means whereby hydraulic communication between said hematologic chamber and the vascular structure is prevented when said implantable vascular device is not in use, said method comprising the steps of:

surgically implanting the vascular device in a living being, whereby the end of said cannula of said vascular device not attached to said hematologic chamber is grafted to a vascular structure and whereby said hematologic chamber is attached to subcutaneous tissues such that said diaphragm is adjacent the skin of the living being,

percutaneously introducing a needle or needle-introduced catheter through said diaphragm of said hematologic chamber into said hematologic chamber,

altering the pressure in said hematologic chamber to initiate fluid flow, wherein decreasing the pressure is accomplished by withdrawing fluid from said hematologic chamber using the needle or needle-introduced catheter, whereby

fluid is caused to flow from the vascular structure into said cannula, through said valve, into said hematologic chamber, and then into the needle or needle-introduced catheter, and wherein increasing the pressure is accomplished by injecting fluid into said hematologic chamber using the needle or needle-introduced catheter, whereby the injected fluid is caused to flow from said hematologic chamber, into said cannula, through said valve, and into the vascular structure,

injecting sterile anti-coagulant fluid into said hematologic chamber of sufficient quantity to displace the fluid in said hematologic chamber and said cannula,

removing the needle or needle-introduced catheter from said diaphragm.

13. A method for using an implantable vascular device in a living being, the implantable vascular device including a hematologic chamber containing a needle-penetrable diaphragm which forms a wall of said hematologic chamber, said diaphragm being tolerant of multiple penetrations with needles or needle-introduced catheters without sacrificing the integrity of said diaphragm, said hematologic chamber being connected to one end of a cannula, the other end of said cannula being grafted to a vascular structure, whereby said hematologic chamber is in hydraulic communication with the vascular structure, said cannula containing valve means comprising,

a hydraulic chamber,

a needle-penetrable hydraulic chamber diaphragm which forms a wall of said hydraulic chamber, said hydraulic chamber diaphragm being tolerant of multiple penetrations with needles or needle-introduced catheters without sacrificing the integrity of said hydraulic chamber diaphragm,

a balloon apparatus located in the lumen of said cannula, and

a coaxial channel hydraulically connecting said hydraulic chamber and said balloon apparatus,

whereby said balloon apparatus may be inflated or deflated by the introduction or removal of fluid from said hydraulic chamber by means of a needle inserted through said hydraulic chamber diaphragm into said hydraulic chamber, and further whereby said balloon apparatus occludes the lumen of said cannula when inflated,

said method comprising the steps of:

surgically implanting the vascular device in a living being, whereby the end of said cannula of said vascular device not attached to said hematologic chamber is grafted to a vascular structure and whereby said hematologic chamber and said hydraulic chamber are attached to subcutaneous tissues such that said diaphragms are adjacent the skin of the living being,

percutaneously introducing a needle through said hydraulic chamber diaphragm of said hydraulic chamber into said hydraulic chamber

reducing the pressure in said hydraulic chamber by withdrawing fluid from said hydraulic chamber using the needle, whereby said balloon apparatus is deflated, clearing the lumen of said cannula,

percutaneously introducing a needle or needle-introduced catheter through said diaphragm of said hematologic chamber into said hematologic chamber,

altering the pressure in said hematologic chamber to initiate fluid flow, wherein decreasing the pressure is accomplished by withdrawing fluid from said hematologic chamber using the needle or needle-introduced catheter, whereby fluid is caused to flow from the vascular structure into said cannula, past said deflated balloon valve, into said hematologic chamber, and then into the needle or needle-introduced catheter, and wherein increasing the pressure is accomplished by injecting fluid into said hematologic chamber using the needle or needle-introduced catheter, whereby the injected fluid is caused to flow from said hematologic chamber, into said cannula, past said deflated balloon valve, and into the vascular structure,

injecting sterile anti-coagulant fluid into said hematologic chamber of sufficient quantity to displace the fluid in said hematologic chamber and said cannula,

increasing the pressure in said hydraulic chamber by injecting fluid into said hydraulic chamber using the needle, whereby said balloon apparatus is inflated, occluding the lumen of said cannula,

removing the needles or needle-introduced catheter from said diaphragm of said hematologic chamber and from said diaphragm of said hydraulic chamber.

14. A method for simultaneously using two implantable vascular devices in a living being, the implantable vascular devices each including a hematologic chamber containing a needle-penetrable diaphragm which forms a wall of said hematologic chamber, said diaphragm being tolerant of multiple penetrations with needles or needle-introduced catheters without sacrificing the integrity of said diaphragm, said hematologic chamber being connected to one end of a cannula, the other end of said cannula being grafted to a vascular structure, whereby said hematologic chamber is in hydraulic communication with the vascular structure, said cannula containing valve means whereby hydraulic communication between said hematologic chamber and the vascular structure is prevented when said implantable vascular device is not in use, said method comprising the steps of:

surgically implanting one of the vascular devices in a living being, whereby the end of said cannula of said vascular device not attached to said hematologic chamber is grafted to a vein and whereby said hematologic chamber is attached to subcutaneous tissues such that said diaphragm is adjacent the skin of the living being,

surgically implanting the other of the vascular devices in a living being, whereby the end of said cannula of said vascular device not attached to said hematologic chamber is grafted to an artery and whereby said hematologic chamber is attached to subcutaneous tissues such that said diaphragm is adjacent the skin of the living being,

percutaneously introducing a needle or needle-introduced catheter through said diaphragm of said hematologic chamber into said hematologic chamber of said vascular device attached to a vein,

percutaneously introducing a needle or needle-introduced catheter through said diaphragm of said hematologic chamber into said hematologic chamber of said vascular device attached to an artery,

hydraulically connecting said percutaneously introduced needles or needle-introduced catheters with each other whereby an extra-corporeal circuit is created, said circuit containing blood handling or treating equipment such as hemodialysis equipment,

decreasing the pressure in said hematologic chamber of the implantable vascular device attached to an artery by withdrawing fluid from said hematologic chamber using the needle or needle-introduced catheter, whereby fluid is caused to flow from the artery into said cannula, through said valve, into said hematologic chamber, and then into the needle or needle-introduced catheter, and into the extra-corporeal circuit containing blood handling or treating equipment such as hemodialysis equipment,

increasing the pressure in said hematologic chamber of the implantable vascular device attached to a vein by injecting fluid from the extra-corporeal circuit containing blood handling or treating equipment such as hemodialysis equipment, into said hematologic chamber using the needle or needle-introduced catheter, whereby fluid is caused to flow from said hematologic chamber, into said cannula, through said valve, and into the vein,

maintaining the flow of blood through the extra-corporeal circuit containing blood handling or treating equipment such as hemodialysis equipment for the time period required to adequately treat or handle the desired quantity of blood,

hydraulically disconnecting said percutaneously introduced needles or needle-introduced catheters from each other,

injecting sterile anti-coagulant fluid into both of said hematologic chambers of sufficient quantity to displace the fluid in said hematologic chambers and said cannula, and

removing the needles or needle-introduced catheters from said diaphragms.

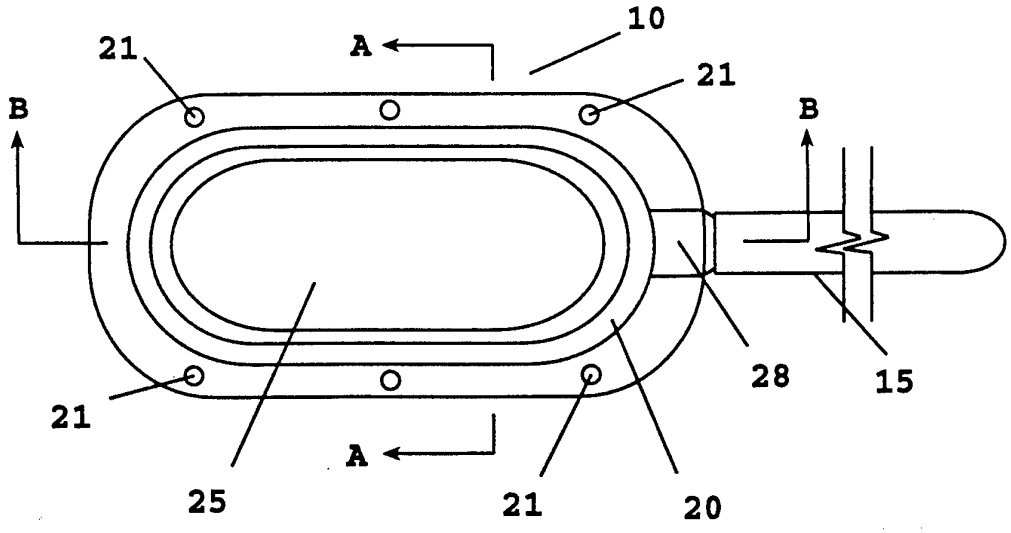

FIG. 1

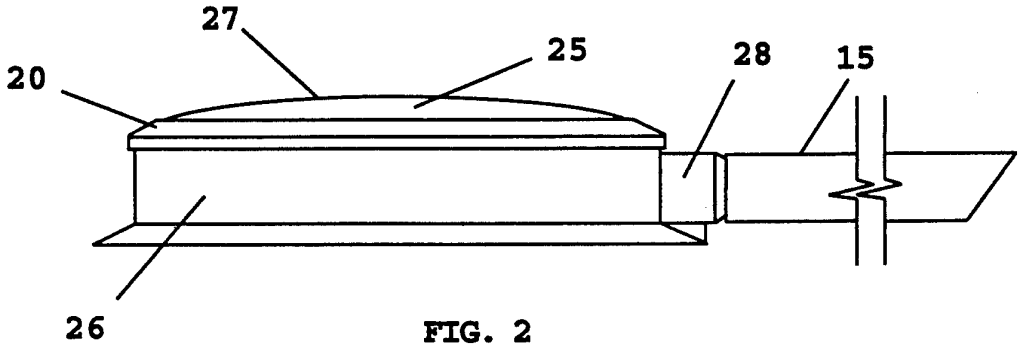

FIG. 2

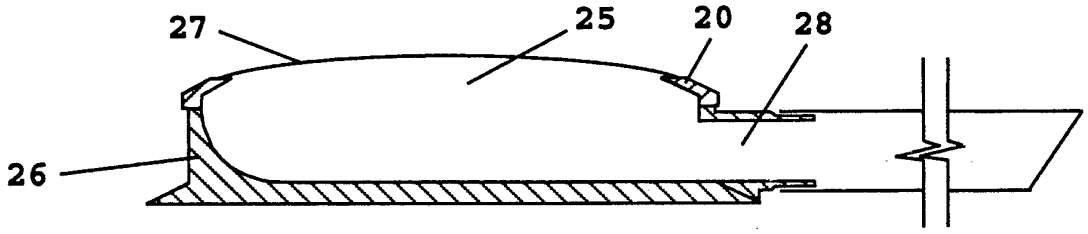

FIG. 4

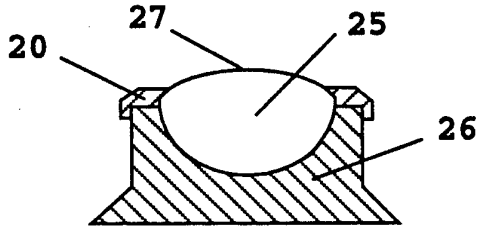

FIG. 3

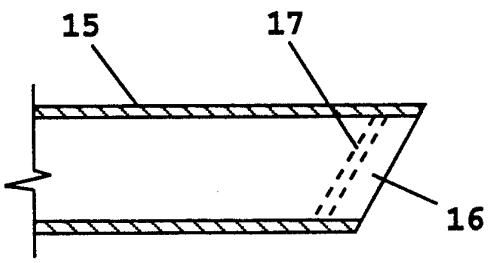

FIG. 5

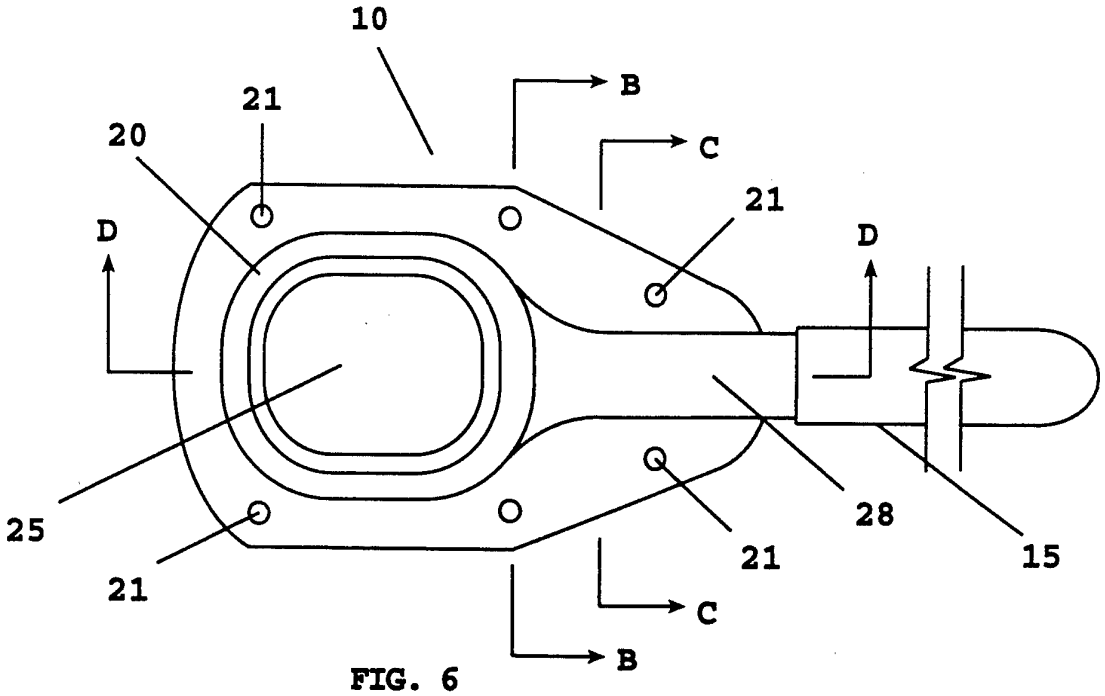

FIG. 6

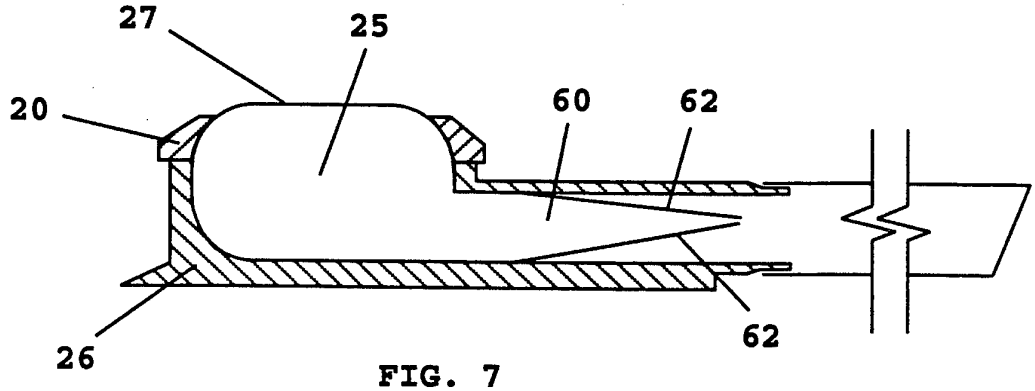

FIG. 7

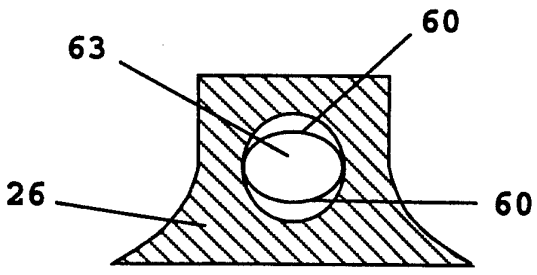

FIG. 8

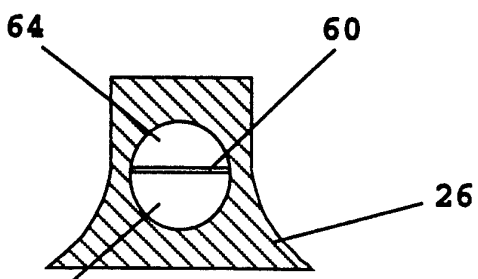

FIG. 9

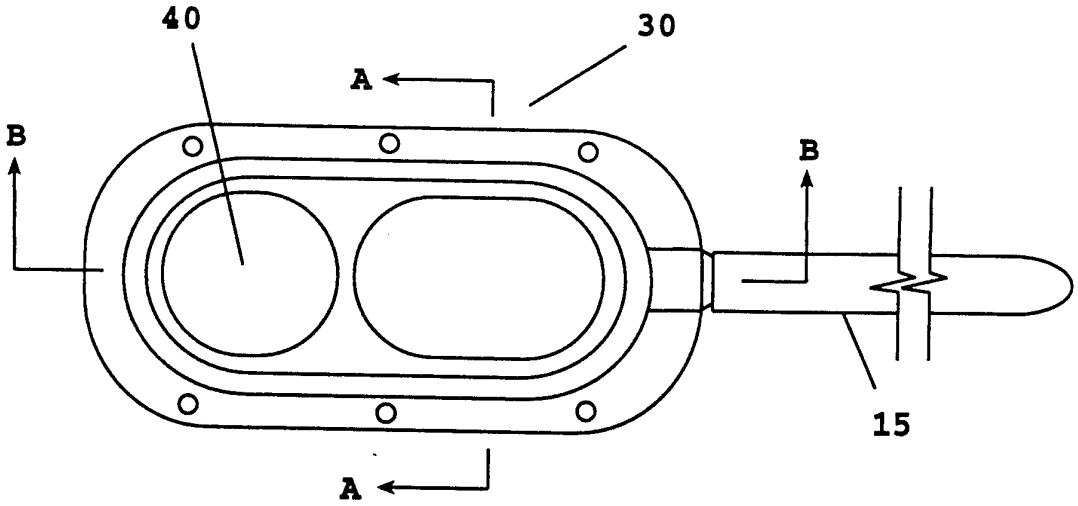

FIG. 10

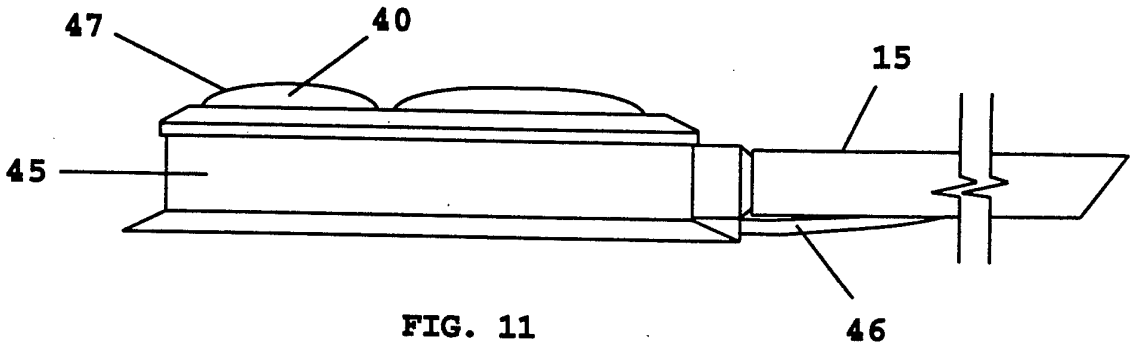

FIG. 11

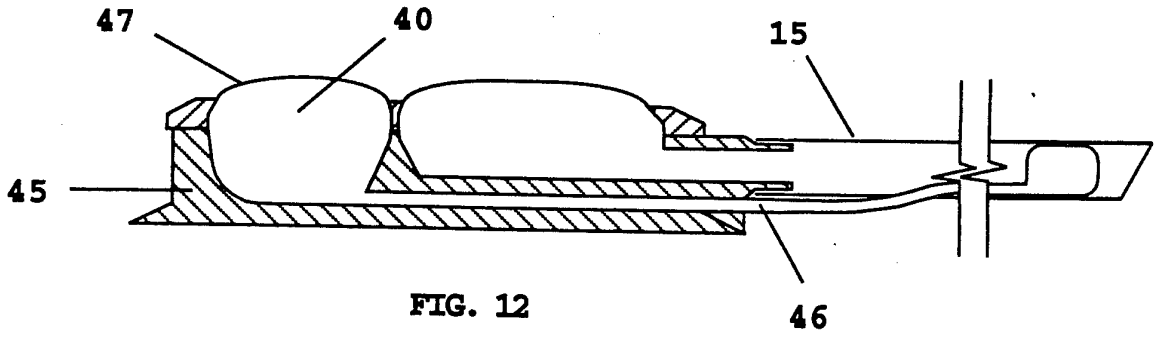

FIG. 12

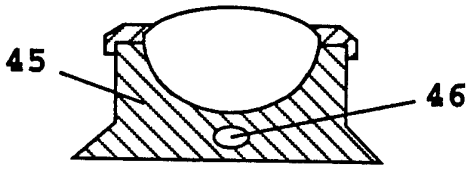

FIG. 13

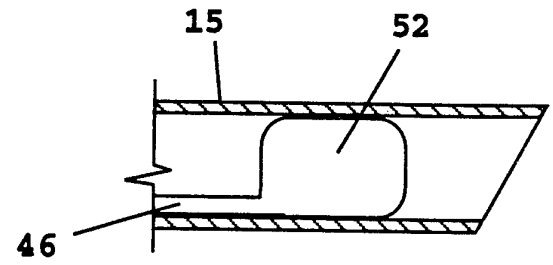

FIG. 14

INTERNATIONAL SEARCH REPORT

Interna l Application No
PCT/US 95/00705

A. CLASSIFICATION OF SUBJECT MATTER
IPC 6 A61M39/02

According to International Patent Classification (IPC) or to both national classification and IPC

B. FIELDS SEARCHED

Minimum documentation searched (classification system followed by classification symbols)
IPC 6 A61M

Documentation searched other than minimum documentation to the extent that such documents are included in the fields searched

Electronic data base consulted during the international search (name of data base and, where practical, search terms used)

C. DOCUMENTS CONSIDERED TO BE RELEVANT

Category *	Citation of document, with indication, where appropriate, of the relevant passages	Relevant to claim No.
X	US,A,4 705 501 (WIGNESS ET AL) 10 November 1987 see the whole document ---	1-5,7, 10,11
X	TRANSACTIONS OF AMERICAN SOCIETY FOR ARTIFICIAL INTERNAL ORGANS, vol. 28, 14 April 1982 - 16 April 1982 CHICAGO ILLINOIS, pages 54-57, WIGNESS ET AL 'BIDIRECTIONAL IMPLANTABLE VASCULAR ACCESS MODALITY' see figures ---	1-5,7, 10,11
X	US,A,4 892 518 (CUPP ET AL) 9 January 1990 see the whole document --- -/--	1-4,6, 10,11

[X] Further documents are listed in the continuation of box C.

[X] Patent family members are listed in annex.

* Special categories of cited documents :

"A" document defining the general state of the art which is not considered to be of particular relevance

"E" earlier document but published on or after the international filing date

"L" document which may throw doubts on priority claim(s) or which is cited to establish the publication date of another citation or other special reason (as specified)

"O" document referring to an oral disclosure, use, exhibition or other means

"P" document published prior to the international filing date but later than the priority date claimed

"T" later document published after the international filing date or priority date and not in conflict with the application but cited to understand the principle or theory underlying the invention

"X" document of particular relevance; the claimed invention cannot be considered novel or cannot be considered to involve an inventive step when the document is taken alone

"Y" document of particular relevance; the claimed invention cannot be considered to involve an inventive step when the document is combined with one or more other such documents, such combination being obvious to a person skilled in the art.

"&" document member of the same patent family

Date of the actual completion of the international search	Date of mailing of the international search report
11 May 1995	19.05.95

Name and mailing address of the ISA	Authorized officer
European Patent Office, P.B. 5818 Patentlaan 2 NL - 2280 HV Rijswijk Tel. (+31-70) 340-2040, Tx. 31 651 epo nl, Fax (+31-70) 340-3016	Clarkson, P

Form PCT/ISA/210 (second sheet) (July 1992)

INTERNATIONAL SEARCH REPORT

Internal Application No
PCT/US 95/00705

C.(Continuation) DOCUMENTS CONSIDERED TO BE RELEVANT

Category °	Citation of document, with indication, where appropriate, of the relevant passages	Relevant to claim No.
X	EP,A,0 228 532 (AIGNER) 15 July 1987 see page 12, line 4 - page 13, line 12; figures 6,7 -----	1-4,10, 11

Form PCT/ISA/210 (continuation of second sheet) (July 1992)

INTERNATIONAL SEARCH REPORT

...ernational application No.
PCT/US 95/00705

Box I Observations where certain claims were found unsearchable (Continuation of item 1 of first sheet)

This international search report has not been established in respect of certain claims under Article 17(2)(a) for the following reasons:

1. [X] Claims Nos.: 12-14
because they relate to subject matter not required to be searched by this Authority, namely:
Method for treatment of the human or animal body by surgery:
See PCT Rule 39.1 (iv)

2. [ ] Claims Nos.:
because they relate to parts of the international application that do not comply with the prescribed requirements to such an extent that no meaningful international search can be carried out, specifically:

3. [ ] Claims Nos.:
because they are dependent claims and are not drafted in accordance with the second and third sentences of Rule 6.4(a).

Box II Observations where unity of invention is lacking (Continuation of item 2 of first sheet)

This International Searching Authority found multiple inventions in this international application, as follows:

1. [ ] As all required additional search fees were timely paid by the applicant, this international search report covers all searchable claims.

2. [ ] As all searchable claims could be searches without effort justifying an additional fee, this Authority did not invite payment of any additional fee.

3. [ ] As only some of the required additional search fees were timely paid by the applicant, this international search report covers only those claims for which fees were paid, specifically claims Nos.:

4. [ ] No required additional search fees were timely paid by the applicant. Consequently, this international search report is restricted to the invention first mentioned in the claims; it is covered by claims Nos.:

Remark on Protest

[ ] The additional search fees were accompanied by the applicant's protest.

[ ] No protest accompanied the payment of additional search fees.

INTERNATIONAL SEARCH REPORT

Information on patent family members

Interna al Application No
PCT/US 95/00705

Patent document cited in search report	Publication date	Patent family member(s)		Publication date
US-A-4705501	10-11-87	NONE		
US-A-4892518	09-01-90	NONE		
EP-A-228532	15-07-87	DE-C-	3539022	23-10-86
		AU-A-	6626986	19-05-87
		WO-A-	8702570	07-05-87
		EP-A-	0245400	19-11-87
		JP-T-	62502729	22-10-87