US00D969081S

(12) **United States Design Patent** (10) **Patent No.: US D969,081 S**
Ogishita et al. (45) **Date of Patent: ** Nov. 8, 2022**

(54) **CONNECTOR**

(71) Applicant: **SONY INTERACTIVE ENTERTAINMENT INC.**, Tokyo (JP)

(72) Inventors: **Naoki Ogishita**, San Mateo, CA (US); **Yujin Morisawa**, Tokyo (JP)

(73) Assignee: **SONY INTERACTIVE ENTERTAINMENT INC.**, Tokyo (JP)

(**) Term: **15 Years**

(21) Appl. No.: **29/736,299**

(22) Filed: **May 29, 2020**

(51) **LOC (13) Cl.** **13-03**

(52) **U.S. Cl.**
USPC **D13/133**; D13/147

(58) **Field of Classification Search**
USPC D8/105; D10/78, 85; D13/108, 117, D13/133, 137.4, 139.4, 139.7, 146–147, D13/153–154, 160, 162; D14/240, 433, D14/435.1, 480.1; D27/194
CPC .. H01R 13/64; H01R 13/506; H01R 13/6461; H01R 13/6658; H01R 24/76; G06F 3/0227; G06F 21/85
See application file for complete search history.

(56) **References Cited**

U.S. PATENT DOCUMENTS

D416,542	S	*	11/1999	Tsai	D13/153
D587,659	S	*	3/2009	Li	D13/162
D622,221	S	*	8/2010	Lin	D13/147
D628,537	S	*	12/2010	Nagata	D13/153
D784,340	S	*	4/2017	Laffon de Mazieres	D14/433
D811,249	S	*	2/2018	Li	D10/78
D817,889	S	*	5/2018	Akana	D13/147

(Continued)

FOREIGN PATENT DOCUMENTS

TW	D109440	S	3/2006
TW	M455869	U	6/2013

(Continued)

OTHER PUBLICATIONS

Allsmartlife, Date: Aug. 6, 2015, [online], [site visited Mar. 10, 2022]. Available from internet, URL: https://www.amazon.com/AllSmartLife-DisplayPort-Aluminium-resolution-ChromeBook/dp/B017TZTMBG (Year: 2015).*

(Continued)

Primary Examiner — Shawn T Gingrich
Assistant Examiner — Bryan N. Melvin
(74) *Attorney, Agent, or Firm* — Nixon & Vanderhye

(57) **CLAIM**

The ornamental design for a connector, as shown and described.

DESCRIPTION

FIG. **1** is a perspective view of front, top and left side of a connector showing our new design;
FIG. **2** is a perspective view of from, top and right side thereof;
FIG. **3** is a front view thereof;
FIG. **4** is a rear view thereof;
FIG. **5** is a left side view thereof;
FIG. **6** is a right side view thereof;
FIG. **7** is a top view thereof;
FIG. **8** is a bottom view thereof; and,
FIG. **9** is a cross sectional view thereof in the direction of Line **9-9** in FIG. **5**.
The drawings include a separation which represents a symbolic break in length of the connector. The appearance of any portion of the article between the break lines forms no part of the claimed design.
The broken line portion of the figure drawings is included to show portions of the connector that form no part of the claimed design.

1 Claim, 5 Drawing Sheets

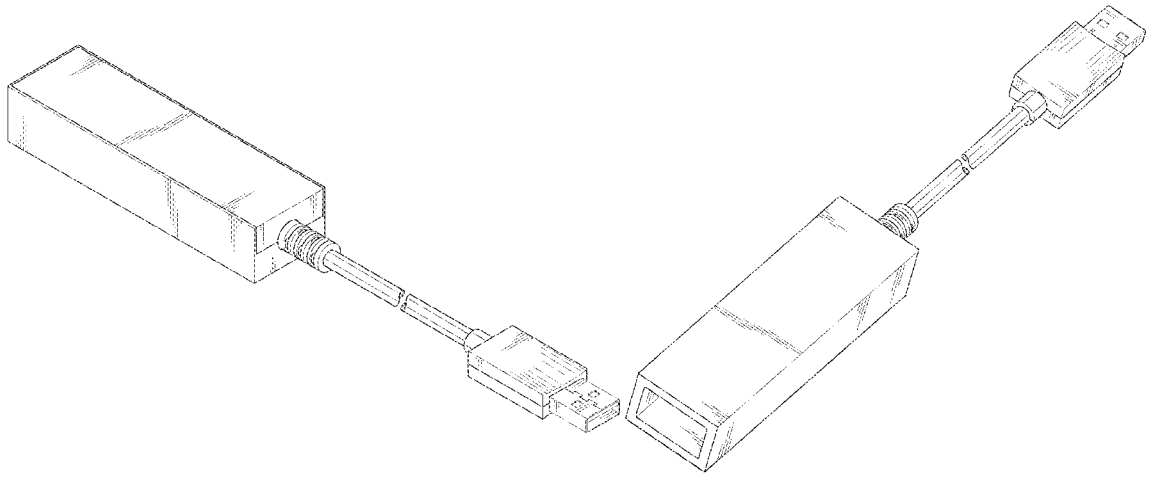

(56) **References Cited**

U.S. PATENT DOCUMENTS

D828,839	S *	9/2018	Zhang	D14/433
D886,824	S *	6/2020	Zhan	D14/433
2004/0185719	A1 *	9/2004	Wang	G06F 3/0227 439/638
2009/0117754	A1 *	5/2009	Fields	H01R 13/506 439/55
2009/0275235	A1 *	11/2009	Shi	H01R 13/6461 439/607.58
2014/0220825	A1 *	8/2014	Chang	H01R 24/76 439/620.22

FOREIGN PATENT DOCUMENTS

TW	D158043	S	12/2013
TW	D160042	S	4/2014
TW	I513122	B	12/2015
TW	I547040	B	8/2016
TW	D183420	S	6/2017

OTHER PUBLICATIONS

Plugable, Date: Sep. 19, 2014, [online], [site visited Mar. 10, 2022]. Available from internet, URL: https://www.amazon.com/Plugable-DisplayPort-Ultra-High-Definition-Graphics-3840x2160/dp/B00NI96S2O (Year: 2014).*

Sony QDA-SB1, Date: Jun. 19, 2016, [online], [site visited Mar. 10, 2022]. Available from internet, URL: https://www.amazon.com/Sony-QDA-SB1-Xqd-USB-Adapter/dp/B01BV2V77K (Year: 2016).*

Office Action of the Intellectual Property Office issued in TW Design Patent Application No. 109306374 dated Jul. 30, 2021, English translation provided.

* cited by examiner

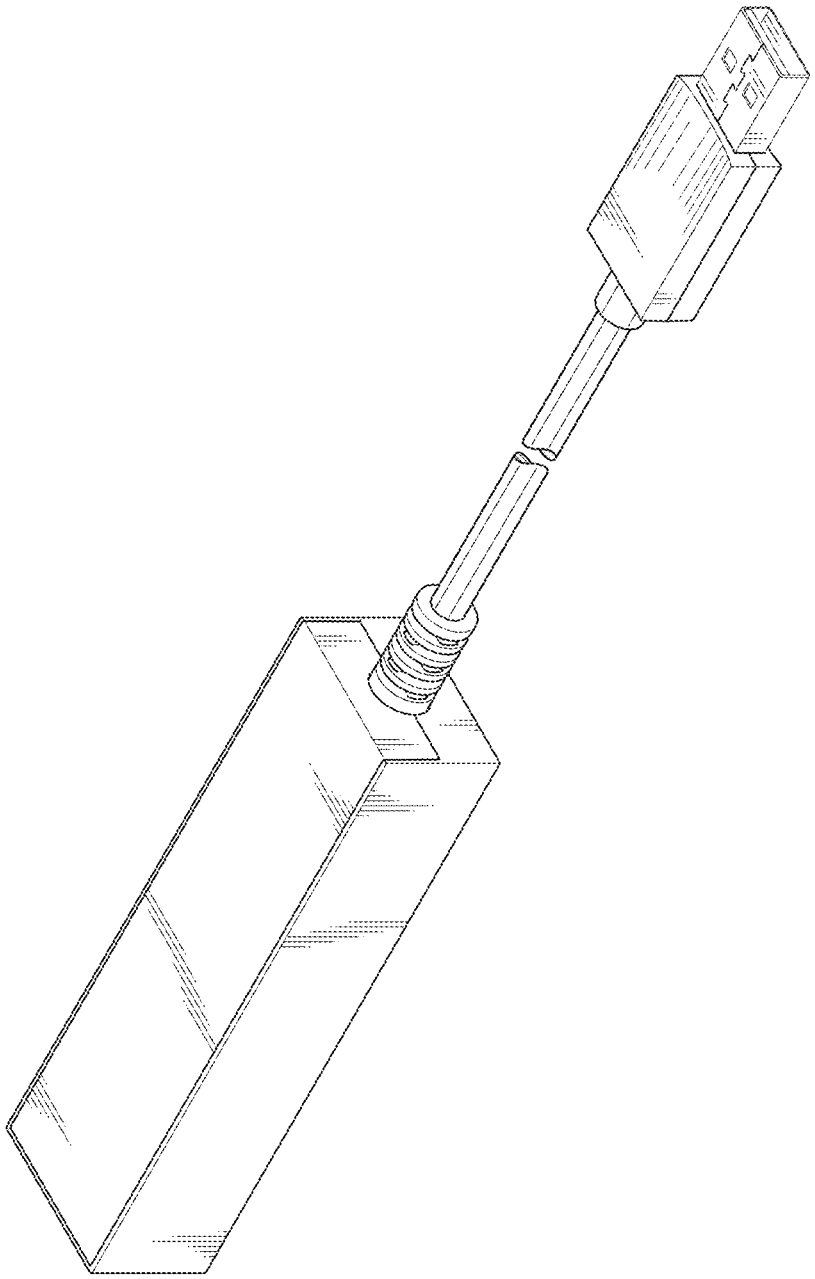

FIG. 1

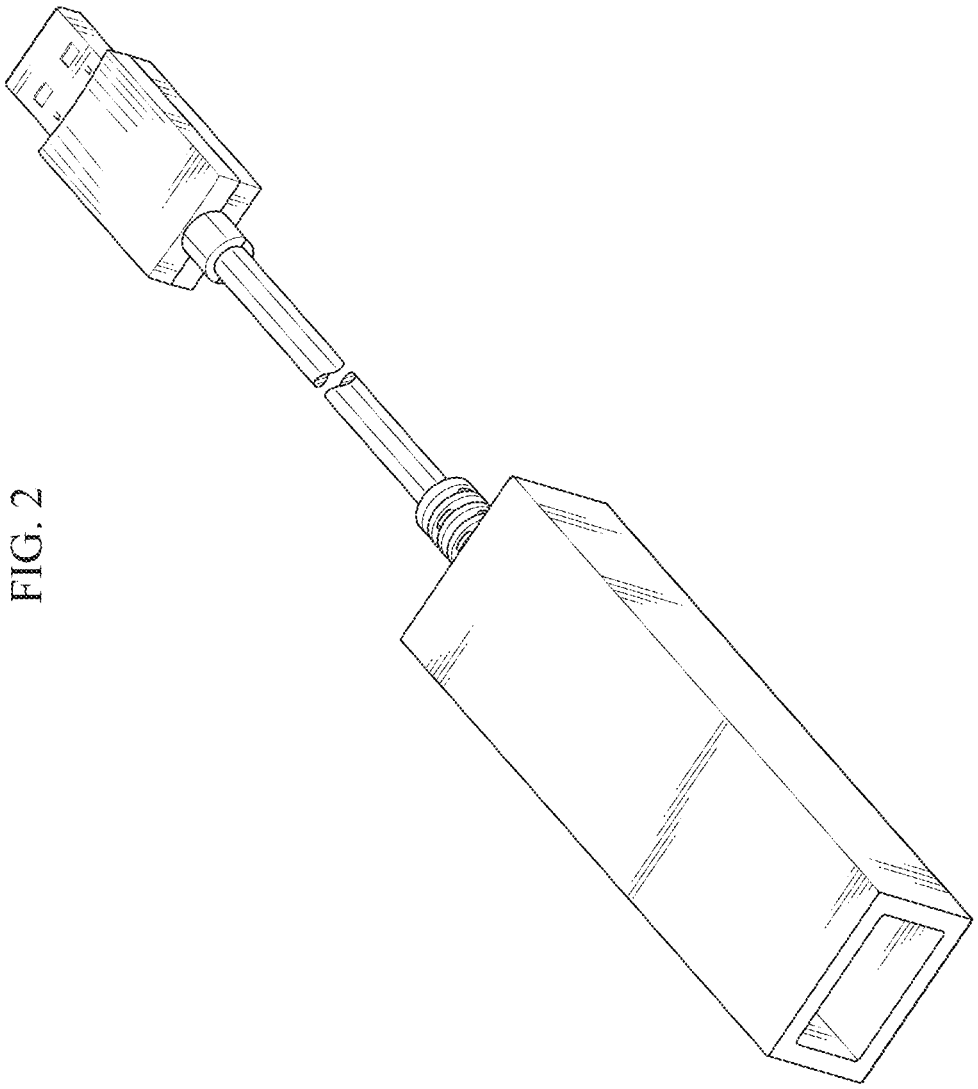

FIG. 2

FIG. 3

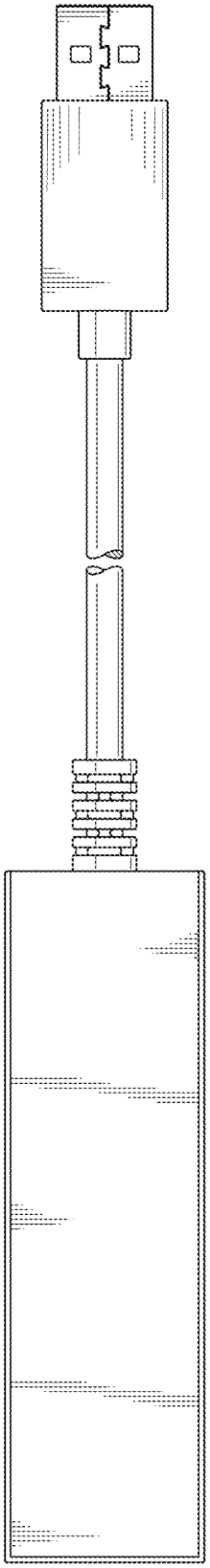

FIG. 4

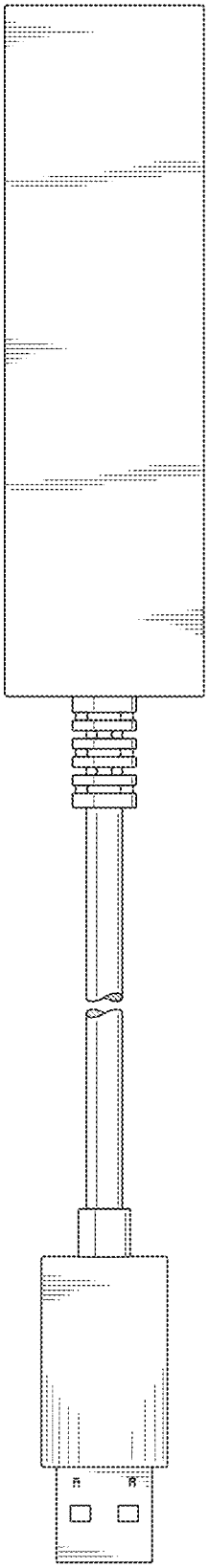

FIG. 6

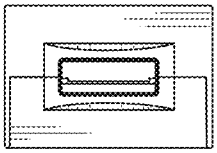

FIG. 5

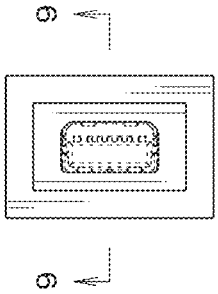

FIG. 7

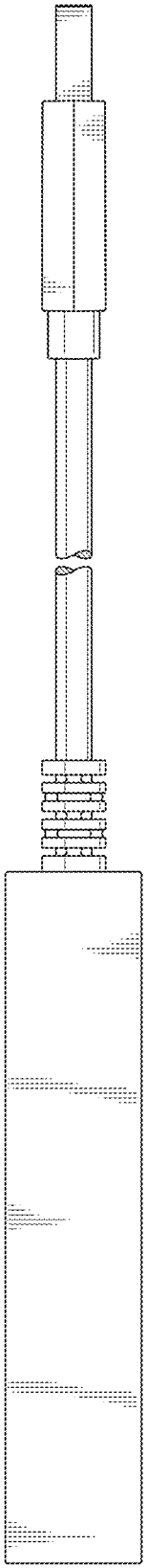

FIG. 8

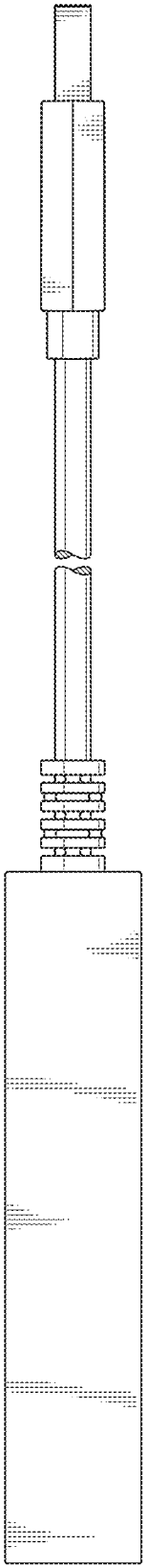

FIG. 9

