Dec. 8, 1959 D. D. MURPHY 2,916,139

REVERSIBLE BELT TRAINING IDLER

Filed April 25, 1956 2 Sheets-Sheet 1

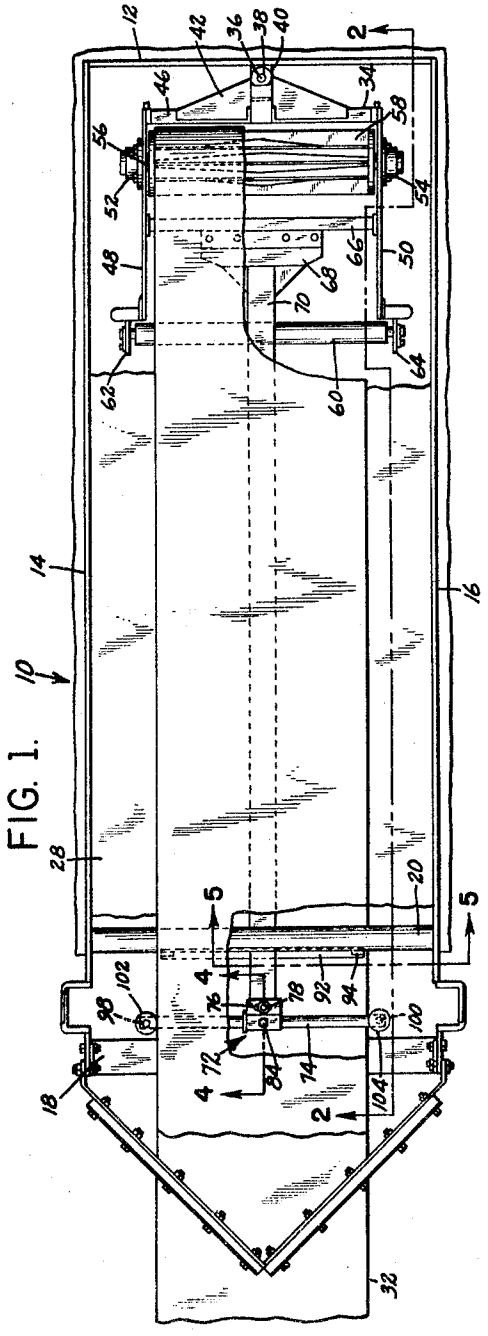

FIG. 1.

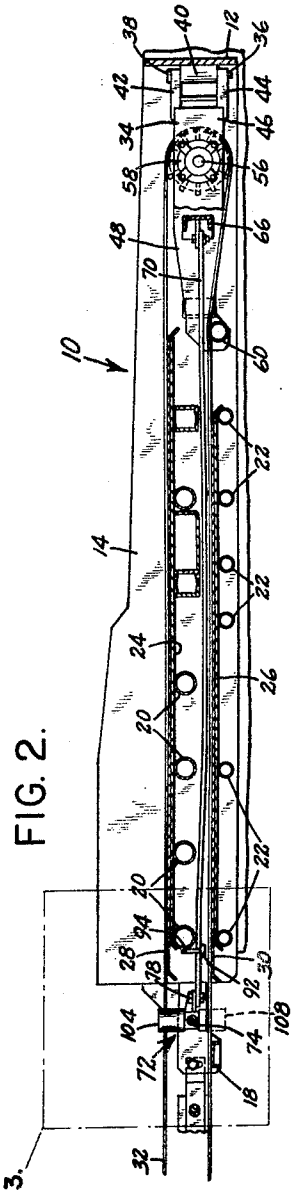

FIG. 2.

FIG. 3.

INVENTOR:
DONALD D. MURPHY
BY Bernard A. Chiarma
ATTORNEY

Dec. 8, 1959 D. D. MURPHY 2,916,139

REVERSIBLE BELT TRAINING IDLER

Filed April 25, 1956 2 Sheets-Sheet 2

FIG. 4.

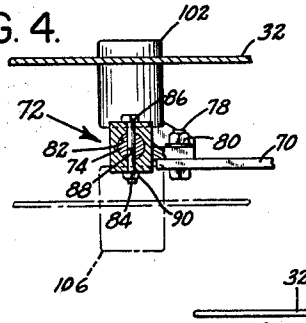

FIG. 3.

FIG. 5.

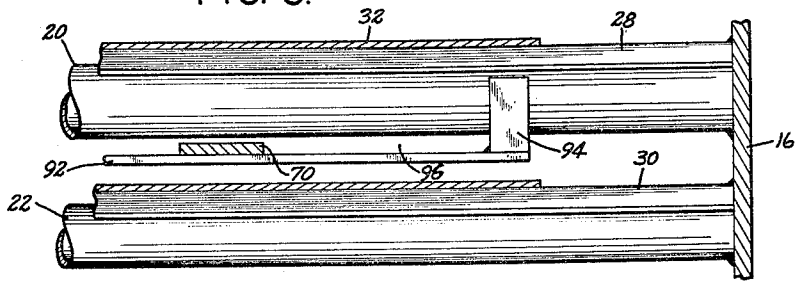

FIG. 6.

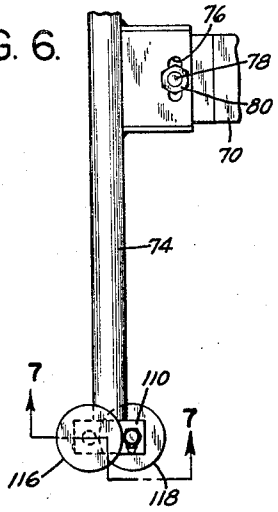

FIG. 7.

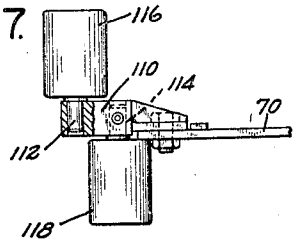

INVENTOR:
DONALD D. MURPHY
BY Bernard A. Chiama
ATTORNEY

United States Patent Office 2,916,139 Patented Dec. 8, 1959

2,916,139

REVERSIBLE BELT TRAINING IDLER

Donald D. Murphy, New Philadelphia, Ohio, assignor to Joy Manufacturing Company, Pittsburgh, Pa., a corporation of Pennsylvania

Application April 25, 1956, Serial No. 580,553

12 Claims. (Cl. 198—202)

The present invention relates generally to extensible belt training idlers and, more particularly to a self-training belt conveyor tail or terminal pulley arrangement.

In reversible extensible belt conveyor devices in which a tail pulley is mounted on a vehicle for movement therewith in accordance with continuous movement of mining equipment, it is impractical to mount the tail pulley for rotation on a fixed axis on the vehicle. Moreover, in ordinary reversible belt conveyors, it is advantageous to provide a special arrangement for the tail pulley to return the belt to proper position and maintain proper belt alignment automatically for the running of the belt conveyor in either the forward or reverse directions.

It is the principal object of this invention to provide an improved tail pulley arrangement for belt conveyors in which the edges of either the active or return runs of the belt cooperates with a pivoted tail pulley support frame for rotating the same to effect return of the belt to a centered position whenever it wanders or is thrown out of such position.

Another object of the present invention is to provide an improved self-training belt conveyor idler arrangement in which guide rollers may be selectively manipulated to positions for cooperation with the edges of the conveyor belt during the active or return runs thereof regardless of the direction of such run.

Another object of the present invention is to provide an improved self-training belt idler in which fixed guide rollers are utilized in the path of the edges of the active and return runs, respectively, thus eliminating the need for manual manipulation of the guide rollers in the event the reversal of belt movement is desired.

In the preferred embodiment of the invention, a tail or terminal pulley is supported for rotation on a horizontal axis on a support which is pivotable horizontally about a vertical axis on a main supporting frame. The pulley support has a portion extending back along the forward section of the main frame for supporting upright belt guide rollers engageable by the edges of the belt as the latter moves off center. The guide rollers are adapted to be pivoted about an axis normal to the longitudinal axis therefor for effecting engagement of the same with a conveyor belt in the event the direction of run of the latter is reversed.

In another embodiment of the invention, a pair of guide rollers are suitably mounted upon parallel, but offset, axes on each end of the guide roller support and are adapted to engage the edge of the belt regardless of the direction of running thereof.

Other objects and advantages will become apparent from the following specification taken in conjunction with the accompanying drawings wherein:

Fig. 1 is a plan view, with a portion of the upper run of the conveyor belt broken away, of a tail pulley and its mounting according to the present invention;

Fig. 2 is a longitudinal vertical section on the plane of the line 2—2 of Fig. 1;

Fig. 3 is a fragmentary elevational view, on an enlarged scale, of a portion of the main support structure shown in Fig. 2;

Fig. 4 is a transverse vertical section of a detail on the plane of the line 4—4 of Fig. 1;

Fig. 5 is a section taken along the plane of the line 5—5 of Fig. 1; and

Figs. 6 and 7 are fragmentary views of a second illustrative embodiment of the invention.

Referring to the drawings, and more particularly to Figs. 1 and 2, a suitable support is illustrated at 10. The details of the mounting for the support 10 are not shown, as it may be either a portion of the body of a vehicle adapted, for example, to follow along behind a continuous miner and receive material from the latter, such as a take-up buggy, or a frame, adapted to rest upon a mine floor or the like and constitute a tail pulley mounting for an ordinary belt conveyor.

The support 10 is illustrated as comprising a box-like arrangement having an end plate 12, opposing sides plates 14, 16 extending on either side of the longitudinal axis of the main support 10, and a forward channel brace 18. The side plates 14, 16 and the end plate 12 may extend upwardly and outwardly for funneling the material centrally of the frame 10 and thereby prevent the lateral escape of the material while the same is traveling along the conveyor. A plurality of upper and lower support elements 20, 22 extend transversely of the support 10 and are connected to the side plates 14, 16 for supporting upper and lower deck plates 24, 26, respectively. The deck plates 24, 26 are provided with suitable overlying wear plates 28, 30 to be engaged by and support the active and return runs of an endless conveyor belt 32.

A support frame or yoke 34, preferably U-shaped in plan, as shown in Fig. 1, is pivotally supported for horizontal swinging about a vertical axis at 36 by means of a pivot pin 38 extending through a bracket 40 secured to the support end 12 and through ears 42, 44 secured to the bight portion 46 of the U-shaped frame 34. The frame 34 has horizontally extending side arm portions 48, 50 which have journal boxes 52, 54 mounted thereon, respectively, for supporting a shaft 56 on which is mounted a tail pulley 58. The tail pulley 58 is of an appropriate diameter for the belt 32 to pass from its upper side onto the wear plate 28 and for the lower, return run of the belt 32 to pass to its lower side. The horizontal portions 48, 50 extend fairly close to the lower deck plate structure and, as shown, support near their outer ends a horizontal belt support roller 60 to be firmly engaged by the lower side of the return run of the belt 32. The roller is suitably journaled on brackets 62, 64 one on each of the arms 48, 50, respectively.

The horizontally disposed arms 48, 50 also carry a cross brace 66 secured transversely of the frame 34 intermediate the tail pulley 58 and the support roller 60. Rigidly secured centrally of the brace 66, as by a bracket 68, and extending outwardly longitudinally along the support 10 is a tongue 70 which is disposed between the active and return runs of the belt 32, substantially as shown in Fig. 2. At the outbye end of the tongue 70, a bearing bracket 72 is mounted for rotatably supporting a bar 74 for turning between two working positions. The bar 74 carries at its outer ends guide rollers which may be positioned to coact with the sides of the upper or lower runs of the belt 32. More specifically, the bearing block is provided with a slot 76 (see Fig. 6) formed with its longitudinal axis normal to the longitudinal axis of the tongue 70. The end of the tongue 70 is provided with a threaded stud or bolt 78 for reception in the slot 76 and a nut 80 for detachably securing the bracket 72 to the tongue 70. In this manner the bracket 72 may be shifted

transversely of the tongue **70** for a purpose which will be presently described.

As shown in Fig. 4, the bracket **72** is internally bored at **82** for rotatably receiving the bar **74** and carries a bolt **84** which is adapted to be positioned in opposed apertures **86** formed in the bracket **72** and a bore **88** formed in the bar **74** for locking the same against rotation with respect to the bearing bracket **72**. A nut **90** may be turned on the bolt **84** for preventing the loosening and dropping of the bolt **84** from the bracket **72**. It will be readily apparent that the bolt **84** may be removed and the bar **74** rotated 180 degrees about its longitudinal axis to effect realignment of the bore **88** with the apertures **86** for permitting locking of the bar **74** in another position with respect to the tongue **70** and the conveyor belt **32**.

The horizontal bar **74** extends to either side of the longitudinal axis of the tongue **70** and, as shown in Fig. 2, is disposed between the active and return runs of the belt **32** as is the tongue.

In Figs. 2 and 4, it will be noted that the longitudinal axis of the bar **74** is approximately midway between the upper surfaces of the wear plates **28, 30** and consequently the runs of the belt **32**. In order to maintain this positioning of the bar **74** with respect to the belt **32**, a horizontal arm plate **92** (see Fig. 5), having vertical side plates **94** secured to the ends thereof, is mounted transversely of the main support **10**. To this end, the side plates **94** are welded to an adjacent upper support element **20** and a clearance space **96** is provided between the element **20** and the plates **94** for permitting the tongue **70** to be positioned upon the brace **94** for sliding movement therealong as will presently appear.

At each end of the bar **74** and extending radially therefrom there are secured pintles **98, 100** (see Fig. 1) for rotatably supporting guide rollers **102, 104** which are engageable with the edges of the belt **32**, if the latter gets sufficiently off center. As shown in Figs. 3 and 4, the guide rollers **102, 104** are extending upwardly for engagement with the upper run of the belt **32** in the event the same is traveling in the direction of arrow A, and is off center with respect to the support **10**. Normally the rollers **102, 104** are positioned a very slight distance from the edges of the belt **32** when the same is centered with respect to the tail pulley **58**. If it is desired to reverse the direction of running of the belt **32**, as indicated by the dotted arrow B, the operator may simply remove the bolt **84** from the bracket **72**, rotate the bar **74** 180 degrees, and replace the bolt and nut **84, 90** thereby bringing the guide rollers **102, 104** into the positions indicated in dotted lines **106, 108** for engagement with the lower run of the belt **32**.

The second embodiment of the present invention, as shown in Figs. 6 and 7, is designed to eliminate the necessity of manually rotating the bar **74** to effect placing of the rollers **102, 104** in their upwardly or downwardly extending positions during reversed periods of running of the belt **32**. To this end, the bar **74** is provided with brackets **110**, one at each end, for supporting a pair of oppositely projecting pintles **112, 114** having their axes lying in vertical and parallel planes but horizontally offset from each other. The upwardly projecting pintles **112** have rotatably mounted thereon guide rollers **116** engageable with the upper run of the belt **32** while the downwardly projecting pintles **114** rotatably support guide rollers **118** for engagement with the lower run of the belt **32**. It will be apparent that in either direction of movement of the belt **32**, guide rollers **116, 118** will be disposed for engagement with the edges of the belt in the event the same strays from its center position with respect to the support **10** and the reversing idler **58**. Initial centering of the belt **32** with respect to the idler **58** is accomplished by loosening of the nut **80** on the stud **78**, moving the bar **74** in either longitudinal direction to effect equal spacings between the edges of the belt and the guide rollers.

The mode of operation of the improved tail pulley arrangement will be evident. If, as in the case of a portable extensible belt conveyor, there is a movement of a cat-mounted tail section of which the support **10** forms a part laterally out of line with an associated belt drive and storage unit, the pivotal mounting of the frame **34** on a vertical axis will prevent disturbance of the belt training. And, provided the support **10** is properly aligned, when it is a portion of a standard conveyor, with the center of the pulley frame **34** on the center line of the belt at installation, the pulley mounting would maintain proper belt alignment.

With the tail section proper in any static position within the limits of the pulley mounting, wandering of the belt **32** from the center of the tail pulley **58** is constantly corrected as necessary by the guide rollers, which when forced to one side swing or oscillate the tongue **70** and consequently the frame **34** about the pivot **36** to angle the tail pulley **58** and so effect a return of the belt to centered position.

It will be evident from what has been said that an effective belt conveyor terminal pulley has been disclosed and that not only does its construction insure automatic centering of the belt when the latter wanders or is thrown off center, as by a crooked belt splice, or an uneven load distribution on the belt **32** but that also effective cooperation with the various guide rollers by the belt is assured no matter which direction the belt is running.

While there are in this application specifically described two forms which the invention may assume in practice, it will be understood that these forms of the same are shown for purposes of illustration, and that the invention may be modified and embodied in various other forms without departing from its spirit or the scope of the appended claims.

What I claim is:

1. In a reversible belt conveyor, the combination comprising a support, a frame element, a pivotal conection on an upright axis between said support and said frame element for supporting said frame for lateral swinging movement about said axis, a tail pulley journaled on said frame element for rotation in opposite directions about a horizontal axis, said tail pulley being adapted to reverse the direction of a belt to form elongated upper and lower runs normally moving in paths extending laterally thereof, an elongated tongue rigidly connected to said frame element to extend outwardly therefrom between said upper and lower runs, said tongue and said upright axis being located in generally opposite directions with respect to said horizontal axis, and laterally spaced means on said tongue remote from said tail pulley located outwardly adjacent and extending laterally of each side of at least one of said runs for engaging said sides upon lateral deviation of said one run from its normal path with respect to said tail pulley.

2. In a reversible belt conveyor, the combination comprising a support, a frame element, a pivotal connection on an upright axis between said support and said frame element for supporting said frame for lateral swinging movement about said axis, a tail pulley journaled on said frame element for rotation in opposite directions about a horizontal axis, said tail pulley being adapted to reverse the direction of a belt to form elongated upper and lower runs normally moving in paths extending laterally thereof, an elongated tongue rigidly conected to said frame element to extend outwardly therefrom between said upper and lower runs, said tongue and said upright axis being located in generally opposite directions with respect to said horizontal axis, and laterally spaced means on said tongue remote from said tail pulley located outwardly adjacent and extending laterally of each side of each of said runs for engaging said sides upon lateral deviation of said runs from their normal path with respect to said tail pulley.

3. In a reversible belt conveyor, the combination comprising a support, a frame element, a pivotal connection

on an upright axis between said support and said frame element for supporting said frame for lateral swinging movement about said axis, a tail pulley journalled on said frame element for rotation in opposite directions about a horizontal axis, said tail pulley being adapted to reverse the direction of a belt to form elongated upper and lower runs normally moving in paths extending laterally thereof, an elongated tongue rigidly connected to said frame element to extend outwardly therefrom between said upper and lower runs, said tongue and said upright axis being located in generally opposite directions with respect to said horizontal axis, and a laterally spaced upwardly extending pair of first rollers and a laterally spaced downwardly extending pair of second rollers rotatably supported by said tongue remote from said tail pulley and located outwardly adjacent and extending laterally of the sides of said upper and lower runs, respectively, for engaging said sides upon lateral deviation of said runs from their normal path with respect to said tail pulley.

4. A tail pulley section for the outbye end of a belt conveyor mechanism comprising a horizontal elongated support structure having a longitudinal opening extending therethrough and having a closed outer end, an endless belt conveyor having top and bottom runs and extending from within said opening outwardly through the open end of said support structure, a frame arranged within said opening freely pivotally connected to said support structure at said closed end to swing horizontally relative to said support structure within said opening, a transverse tail pulley around which said conveyor belt passes, said tail pulley journalled on said pivoted frame, an elongated horizontal arm extending longitudinally in said longitudinal opening within said support structure and rigidly secured to said tail pulley frame, said arm extending outwardly through the open inner end of said support structure remote from said closed end, said arm having lateral portions at its end opposite from its pivoted end, and rotary guides carried at the remote ends of said lateral portions at the opposite sides of said conveyor belt for cooperation of the edges of one run of the conveyor belt to maintain proper belt alignment.

5. A tail pulley section as set forth in claim 4 wherein said conveyor belt is reversible and said lateral portions of said elongated arm carry rotary guides engageable with either run of said reversible conveyor belt.

6. A tail pulley section as set forth in claim 4 wherein said lateral portions of said elongated arm carry upwardly and downwardly extending upper and lower rotary guides at the sides of said conveyor belt and cooperating with the side edges of said top and bottom runs of said reversible conveyor belt.

7. A tail pulley section as set forth in claim 6 wherein the rotary guides cooperating with the top run of said conveyor belt are rotatable about axes parallel with and offset longitudinally of said support structure from the axes of rotation of the lower rotary guides.

8. A tail pulley section as set forth in claim 4 wherein said frame structure comprises upper and lower horizontal guiding means extending transversely between the sides of said support structure and along the upper surfaces of which the top and bottom runs of said conveyor belt travel, and said elongated arm being arranged longitudinally in the space between said upper and lower guiding means, said lateral portions of said arm located longitudinally beyond said guiding means.

9. A tail pulley section as set forth in claim 4 wherein said pulley support is generally U-shaped in plan and has a horizontal longitudinally extending portion at the outbye end of the tail pulley section and providing a pivot element spaced longitudinally of said support from said tail pulley, and said closed outer end of said support structure has a projecting pivot element cooperating with said first mentioned pivot element.

10. In a reversible belt conveyor, the combination comprising a support, a frame element, a pivotal connection on an upright axis between said support and said frame element for supporting said frame for lateral swinging movement about said axis, a tail pulley journaled on said frame element for rotation about a horizontal axis, said tail pulley being adapted to reverse the direction of a belt to form elongated upper and lower runs normally moving in paths extending laterally thereof, an elongated tongue rigidly connected to said frame element to extend outwardly therefrom, said tongue and said upright axis being located in generally opposite directions with respect to said horizontal axis, and laterally spaced means on said tongue remote from said tail pulley located outwardly adjacent and extending laterally of each side of at least one of said runs for engaging said sides upon lateral deviation of said one run from its normal path with respect to said tail pulley.

11. In a reversible belt conveyor, the combination comprising a support, a frame element, a pivotal connection on an upright axis between said support and said frame element for supporting said frame for lateral swinging movement about said axis, a tail pulley journaled on said frame element for rotation in opposite directions about a horizontal axis, said tail pulley being adapted to reverse the direction of a belt to form elongated upper and lower runs normally moving in paths extending laterally thereof, an elongated tongue rigidly connected to said frame element to extend outwardly therefrom between said upper and lower runs, said tongue and said upright axis being located in generally opposite directions with respect to said horizontal axis, and laterally spaced means pivotably secured to said tongue remote from said tail pulley which is selectably movable to be located outwardly adjacent and extending laterally of each side of either of said runs for engaging said sides upon lateral deviation of said runs, respectively, from their normal path with respect to said tail pulley.

12. In a reversible belt conveyor, the combination comprising a support, a frame element, a pivotal connection on an upright axis between said support and said frame element for supporting said frame for lateral swinging movement about said axis, a tail pulley journalled on said frame element for rotation in opposite directions about a horizontal axis, said tail pulley being adapted to reverse the direction of a belt to form elongated upper and lower runs normally moving in paths extending laterally thereof, an elongated tongue rigidly connected to said frame element to extend outwardly therefrom between said upper and lower runs, said tongue and said upright axis being located in generally opposite directions with respect to said horizontal axis, a guide mechanism supported by said tongue remote from said tail pulley, said guide mechanism carrying vertically journalled guide rollers, means associated with said guide mechanism for selectively positioning said guide rollers for cooperation with the edges of either of said runs, and means for locking said guide mechanism with respect to said tongue for maintaining said guide rollers in either of said positions.

References Cited in the file of this patent

UNITED STATES PATENTS

2,160,057	Carus et al.	May 30, 1939
2,532,987	Berndt	Dec. 5, 1950
2,664,994	LeTourneau	Jan. 5, 1954
2,674,366	Kindseth et al.	Apr. 6, 1954
2,725,757	Murphy	Dec. 6, 1955
2,751,067	Nicholson	June 19, 1956
2,821,291	Schott	Jan. 28, 1958

FOREIGN PATENTS

12,925	Great Britain	June 4, 1907
15,714	Norway	Nov. 5, 1906
26,967	Australia	Aug. 5, 1930