Feb. 22, 1966 A. J. TOKOLA 3,236,055

PILE DRIVING TEMPLATE

Filed Jan. 31, 1963 3 Sheets-Sheet 1

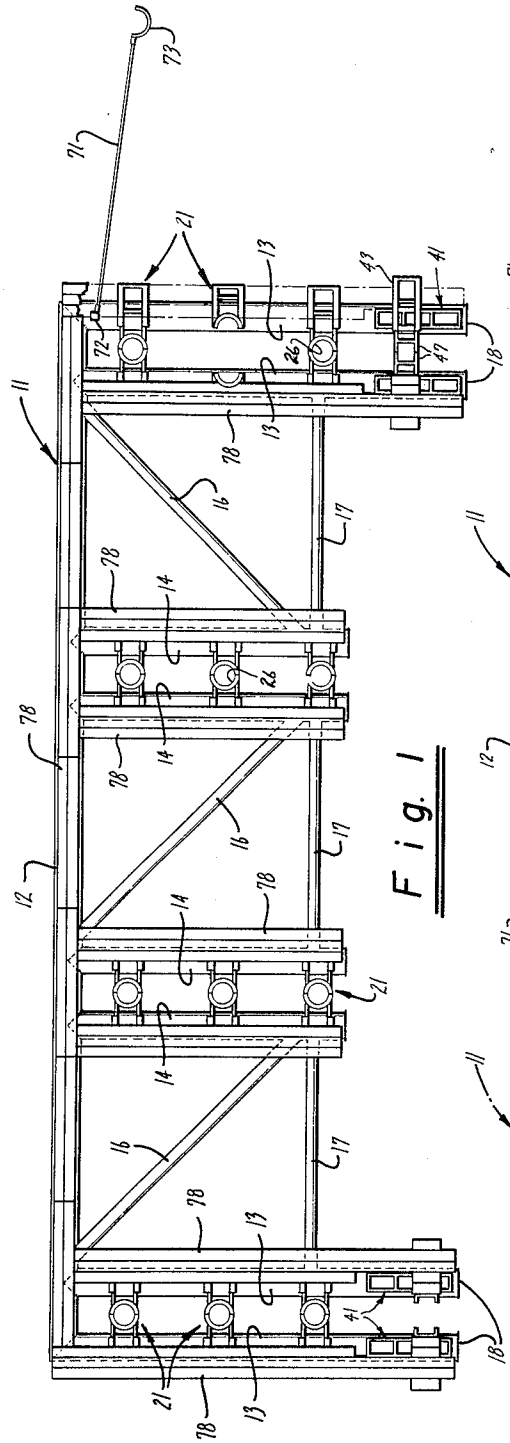

Fig. 1

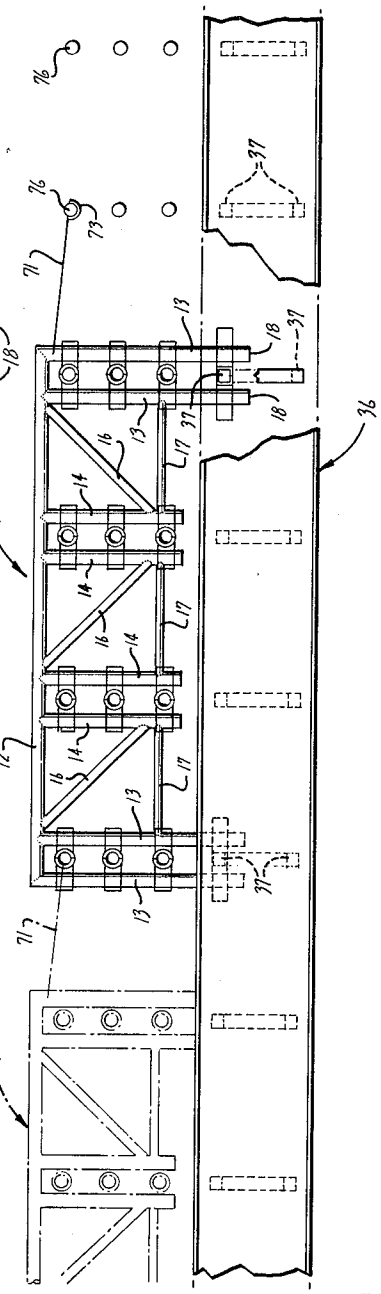

Fig. 2

INVENTOR.
Alpo J. Tokola
BY Flehr and Swain
Attorneys

Feb. 22, 1966 A. J. TOKOLA 3,236,055

PILE DRIVING TEMPLATE

Filed Jan. 31, 1963 3 Sheets-Sheet 2

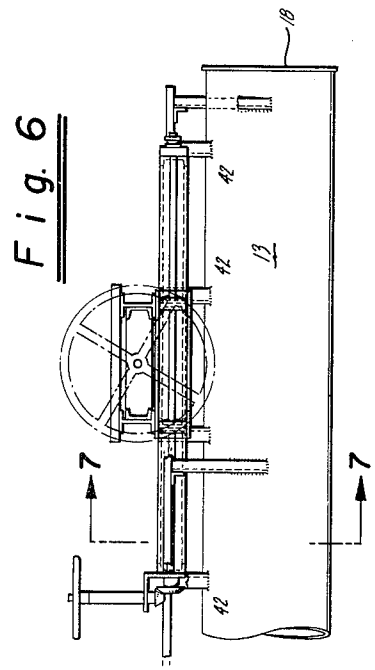

Fig. 6

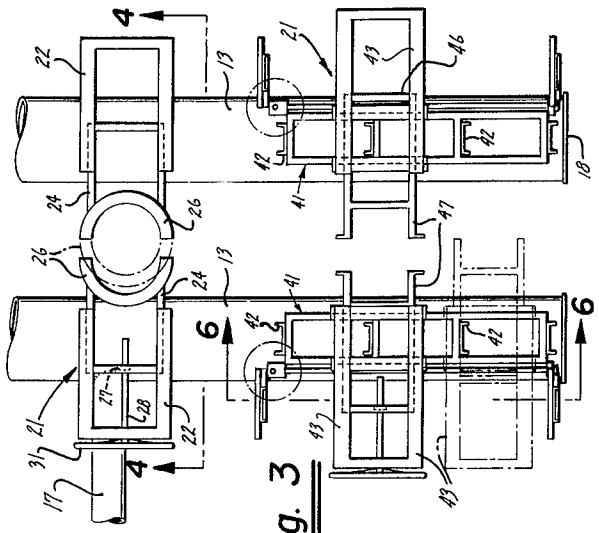

Fig. 3

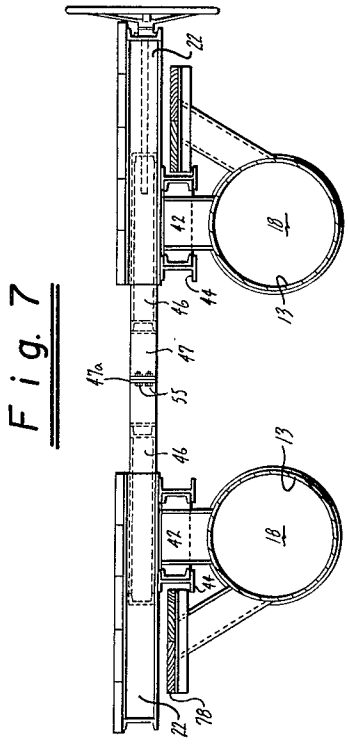

Fig. 7

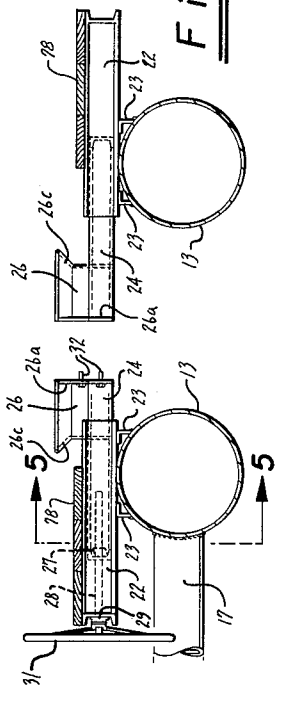

Fig. 4

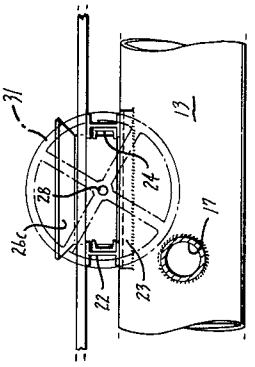

Fig. 5

INVENTOR.

BY Alpo J. Tokola

Flehr and Swain

Attorneys

Feb. 22, 1966 A. J. TOKOLA 3,236,055

PILE DRIVING TEMPLATE

Filed Jan. 31, 1963 3 Sheets-Sheet 3

Fig. 8

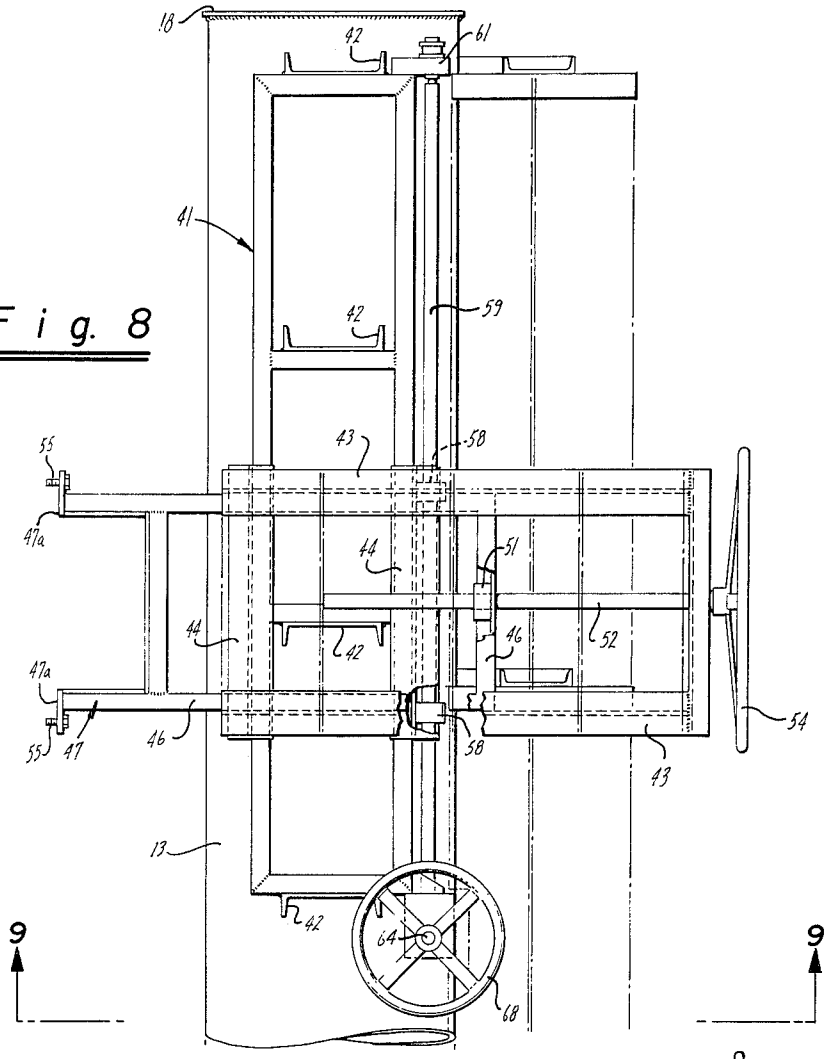

Fig. 9

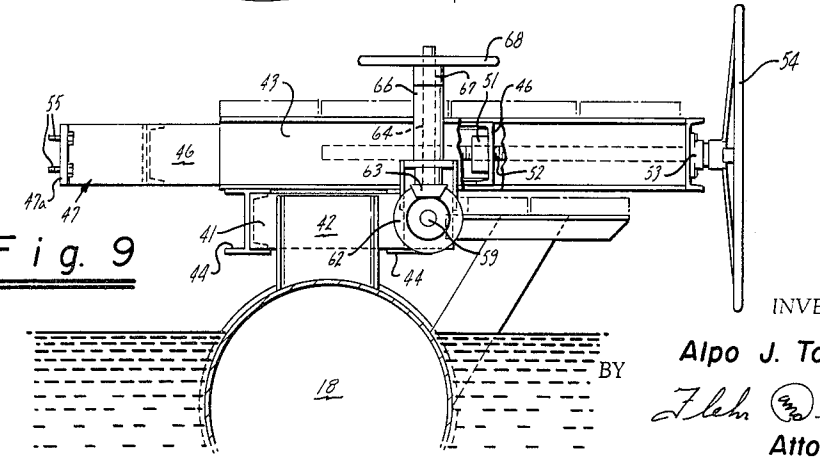

INVENTOR.
Alpo J. Tokola
BY
Flehr Hohbach Test Albritton & Herbert
Attorneys

United States Patent Office 3,236,055 Patented Feb. 22, 1966

3,236,055

PILE DRIVING TEMPLATE

Alpo J. Tokola, Lafayette, Calif., assignor, by mesne assignments, to Peter Kiewit Sons, Co., Omaha, Nebr., a corporation of Nebraska

Filed Jan. 31, 1963, Ser. No. 255,274
13 Claims. (Cl. 61—63)

This invention relates to a pile driving template and more particularly to a pile driving template which facilitates accurate driving of piles.

In driving of piles, there is normally a requirement that the piles be positioned as accurately as possible. In the positioning of piles for driving them into a formation which is under water, there is considerable difficulty in properly positioning such piles and maintaining their position during driving of same. In addition, there is considerable difficulty in obtaining a high rate of production in driving piles into underwater formation. There is, therefore, need for a new and improved apparatus for the driving of piles.

In general, it is an object of the present invention to provide a pile driving template which facilitates the driving of piles.

Another object of this invention is to provide a pile driving template of the above character which particularly facilitates the driving of piles into underwater formations.

Another object of the invention is to provide a template of the above general character which greatly increases the accuracy of driving piles into underwater formations.

Another object of the invention is to provide a template of the above character in which a plurality of piles can be driven before the template must be shifted.

Another object of the invention is to provide a template of the above character which can be precisely located.

Another object of the invention is to provide a template of the above character in which the template is located by using previously driven piles or pre-existing structures.

Another object of the invention is to provide a template of the above character which can be readily removed after the piles have been driven.

Another object of the invention is to provide a template of the above character in which the position of the pile-locating collars can be shifted relative to the framework of the template.

Additional objects and features of the invention will appear from the following description in which the preferred embodiment is set forth in detail in conjunction with the accompanying drawings.

Referring to the drawings:

FIGURE 1 is a top plan view of a pile driving template incorporating my invention.

FIGURE 2 is a top plan view of the template shown in FIGURE 1 without the catwalks and showing the positioning of the pile driving template utilizing a pre-existing trestle.

FIGURE 3 is an enlarged view of the lower right-hand portion of the template shown in FIGURE 1.

FIGURE 4 is a cross-sectional view taken along the line 4—4 of FIGURE 3.

FIGURE 5 is a cross-sectional view taken along the line 5—5 of FIGURE 4.

FIGURE 6 is a cross-sectional view taken along the line 6—6 of FIGURE 3.

FIGURE 7 is a cross-sectional view taken along the line 7—7 of FIGURE 6.

FIGURE 8 is an enlarged detail view of a portion of the pile driving template shown in FIGURE 3.

FIGURE 9 is a side elevational view looking along the line 9—9 of FIGURE 8.

In general, my pile template consists of a framework with a plurality of split collars mounted in predetermined positions on the framework. The split collars are movable between open and closed positions and are formed in at least two sections. Means is provided for shifting the position of at least one of the sections at each of the split collars to facilitate opening of the split collars to release the frame from the piles. Means is also provided for retaining the sections in closed position to retain the piles placed in the collars and guide the piles as the piles are being driven.

As shown in the drawings, my pile template consists of a floating frame **11** which is formed of a suitable material which will float in water. For example, as shown in the drawings, the frame can be formed of a longitudinal pipe section **12** which extends the length of the frame and two pairs of spaced, parallel, laterally extending pipe sections **13** which are secured to the end portions of the longitudinal frame member by suitable means such as welding. An additional pair of spaced, parallel, laterally extending pipe sections **14** are secured to the longitudinal pipe member **12** between the pairs of the pipe sections **13**. It will be noted that the pipe sections **13** are of a length which is substantially greater than the pipe sections **14** for a purpose hereinafter described. Also, it will be noted that the ends of the pairs of pipe sections **13** and **14** remote from the pipe sections **12** are open to provide egress openings for a purpose hereinafter described.

Diagonally extending pipe sections **16** extend between the longitudinal pipe section **12** and the pipe section **14** and serve as braces. Additional longitudinally extending pipe sections **17** are connected between the pipe sections **13** and **14** and also serve as braces. Exposed ends of the pipe sections **13** and **14** are closed with end closures **18** to provide sealed containers into which water cannot enter.

A plurality of the split collar assemblies **21** are mounted on the framework **11** in predetermined adjustable positions. Each of the split collar assemblies consists of a U-shaped outer frame **22** which is formed of a suitable material such as I-beams. The frames **22** are secured to the pipe sections **13** and **14** in a suitable manner such as by means of brackets **23** welded to the pipe sections and to the frames. Pairs of U-shaped outer frames **22** are secured to the laterally extending pipe sections **13** and **14** so that their open ends are spaced apart and open in a direction which is at right angles to the longitudinal axes of the pipe sections **13** and **14** and so that the open ends of each pair face each other.

Each of a pair of the split collar assemblies **21** also includes U-shaped inner frames **24** which are formed of a suitable material such as channels and which are dimensioned so that they fit within the U-shaped channels formed in the outer frames **22**. This permits the inner frames **24** to be shifted or moved in and out of the outer frames **22**. Semicircular collar sections **26** are secured to the ends of the inner frame members **24** and are positioned so that the collar sections are adapted to be moved into a closed position in which a split circular collar is formed and into an open or spaced apart position to permit the template to be released from the piles as hereinafter described.

Means are provided for moving at least one of the collar sections with its associated inner frame to open and close the split collar. It consists of a nut **27** which is mounted on a transverse portion of the U-shaped inner frame. A screw **28** is threaded through the nut and is rotatably mounted in a bearing **29** carried by a transverse portion of one of the outer frames **22**. A hand wheel **31** is mounted on the screw and is provided for rotating

the screw. It is readily apparent that by rotating the hand wheel in opposite directions, one of the inner frames **24** can be moved toward and away from the other inner frame. The other inner frame, if desired, may also be provided with suitable means for positively opening and closing the same. However, I have found the other inner frame can be readily moved between the open and closed positions by hand.

When both of the collar sections **26** have been moved to the closed position, flange portions **26***a* provided on opposite sides of both collar sections can be fastened together by suitable releasable means such as bolts **32**. When both of the collar sections are tied together in this manner, it can be readily seen that the split collar comprised of both sections will be moved in one direction or the other as the hand wheel **31** is rotated in opposite directions.

Each of the collar sections is provided with an upwardly and outwardly turned flange portion **26***c* which facilitates guiding the butt or lower end of the pile into the collar section as the pile is being lowered.

It will be noted that a plurality of split collar assemblies **21** have been provided on each pair of the pipe sections **13** and **14**. In the arrangement shown, three such split collar assemblies have been provided on each pair of pipe sections and these have been positioned so that they are aligned to provide longitudinally and laterally extending rows of split collar assemblies. It is, however, readily apparent that if required, there can be any desired arrangement of the collar assemblies.

Suitable means are provided for positioning the pile driving template so that piles placed in the template will be properly positioned. Such means can take various forms as, for example, as shown in the drawing where a pre-existing trestle or bridge structure **36** is available, it is possible to utilize the piers which support the pre-existing bridge or trestle for positioning and locating the pile driving template. In the pre-existing bridge structure **36** shown in FIGURE 2 of the drawings, the bridge structure is provided with supporting piers **37** which are rectangular in cross-section. In the pile driving template shown in the drawings, the template has been designed so that it can be positioned by utilizing the piers **37** of the pre-existing trestle or bridge structure **36**.

The pile template positioning means consists of a rectangular frame **41** formed of a suitable material such as channels and is supported upon the pipe sections **13** in a position so that its longitudinal axis extends in a direction which is parallel to the longitudinal axis of the pipe sections **13**. The frame **41** is mounted upon the pipe sections **13** by channel sections **42**. A pair of outer U-shaped frames **43** formed of suitable material such as I-beams are mounted on the frame **41** for movement longitudinally of the frame. Each frame **43**, as shown in FIGURE 9, is secured to a pair of I-beam sections **44** which receive opposite sides of the frame **41**. An inner U-shaped frame **46** is mounted in each of the outer frames **43** and is adapted to be moved in and out of the outer U-shaped frames in much the same manner as in the split collar assemblies **21**. The openings in the pairs of associated outer U-shaped members **43** face each other. The same is true of the openings in the inner U-shaped frames **46**. U-shaped collar sections **47** are mounted on the inner U-shaped frames and adapted to be moved between open and closed, or pier disengaging and pier engaging positions. In the present embodiment, the collar sections are U-shaped because of the rectangular cross-section of the piers **37**.

Means are provided for moving at least one of the inner U-shaped frames **46** longitudinally of the outer U-shaped frames **43** and consists of a nut **51** which is mounted in a transverse portion of the inner U-shaped frame **46**. A screw **52** is threaded into the nut **51** and is rotatably journalled in a bearing **53**. A hand wheel **54** is provided for turning the screw **52**.

Suitable means are provided for clamping the two U-shaped collar sections **47** together so that they can be moved in unison by the hand wheel **54** and consists of flanges **47***a* provided on the section **47** which are releasably secured together by bolts **55**.

It can be seen that the hand wheel **54** can be utilized for moving the split collar sections **47** in a direction which is at right angles to the longitudinal axis of the pipe sections **14**. Means are also provided for shifting the collar sections **47** in a direction parallel to the longitudinal axis of the pipe sections **13** and consists of a pair of nuts **58** which are mounted in one of the I-beam sections **44**. A screw **59** is threaded through the nuts and has one end journalled in a bearing **61** secured to the frame **41**. The other end of the screw is also journalled in a bearing (not shown). A bevel gear **61** is affixed to one end of the screw **59** and is driven by another bevel gear **63**. The bevel gear **63** is affixed to a vertically extending shaft **64** which rises through a collar **66** secured to the frame **41**. The shaft **64** is journalled in a bearing **67** and is adapted to be rotated by hand wheel **68**. By rotating the hand wheel **68** in opposite directions, the U-shaped collar section **47** can be shifted in a direction which is parallel to the longitudinal axis of the pipe sections **14**.

If desired, additional means can also be provided for stabilizing the position of the pile driving template. For example, as shown in the drawings, a swinging guide arm **71** can be provided which is pivotally mounted on the frame **11** at **72**. A hook-shaped member **73** is mounted on the end of the arm and is adapted to engage a pile **76** which already has been driven to the required set.

Wooden catwalks **78** have been provided on the upper portion of the floating frame **11** so that the operator can have ready access to all of the collar assemblies and the hand wheel to permit rapid opening and closing of the collar assemblies. Let it be assumed that it is desired to drive piles into an underwater formation and that the pile driving template is already floating in the water. Also, let it be assumed, as shown in FIGURE 2 that it is desired to drive piles adjacent to pre-existing bridge or trestle so that the bridge or trestle can be utilized for positioning of the pile driving template. When such is the case, the hand wheels **54** are operated to move the U-shaped collar sections **47** to an open position. The pile driving template is then shifted into the desired position by moving it sideways so that the existing piers **37** pass between the pairs of pipe setcions **14** and enter between the open U-shaped collar sections **47**. The collar sections **37** are then closed about the piles **37** by operation of the hand wheel **54**. As hereinbefore described, one of the inner frames **46** is moved by the hand wheel, whereas the other is moved manually. The two frames are then clamped together by the bolts **55**. After the piers **37** are engaged, the pile driving template is precisely positioned by operating the hand wheels **54** and **68**. The hand wheels **54** are provided for shifting the pile driving template longitudinally, whereas the hand wheels **68** are provided for shifting the pile driving template laterally into its desired position.

In order to more properly stabilize the pile driving template, it may be desired to provide additional guide points or positioning points for the template. For example, the guide arm **71** can be swung out and moved into engagement with a pile **76** which has already been driven.

After the pile driving template is in place, the piles can be readily lowered into the split collars formed by the collar sections **26** by the use of a floating crane or other suitable apparatus. The piles can be placed in the split collars one by one until all the collars are filled. As soon as this has been accomplished, the piles can be driven in any desired order to the required set. During driving of the piles, the nuts **27** and the screws **28** will retain the split collars in the desired position. The split U-shaped collars engaging the piers **37** will also retain the pile tem-

plate in the proper position because of the screws **52** and the worms **51**.

After all the piles have been driven (as, for example, all 12 piles in the pile driving template shown in the drawing), the pile driving template is ready to be shifted to the next location. The bolts **32** in the split collars are removed and the hand wheels are operated to open the collar sections. The U-shaped collar sections engaging the piers **37** are also opened. As soon as all the collar sections have been opened, the entire pile driving template can be moved out sideways from the piles which have been driven with the piles passing through the egress openings between the frame members **13** and **14**. Thus, the pile driving template can be shifted to the left as viewed in FIGURE 2 and as shown in broken lines in FIGURE 2 into a position in which the next four rows of piles can be driven. The same sequence of operations is then repeated until all the piles have been driven.

After all the piles have been driven along the pre-existing bridge structure, the pre-existing bridge structure can then be removed and additional rows of piles can be driven in the locations previously occupied by the pre-existing bridge by utilizing the piles which had been previously driven. To do this, it is only necessary to change the U-shaped collar portions **47** into semi-circular sections which would be more adapted to engage the cylindrical piles **76** previously driven.

If there is no pre-existing structure, it is still possible to utilize my pile driving template very effectively. For example, the pile driving template can be anchored and properly positioned by first driving special piles. Thereafter, the last row of piles could be driven in each set and can be used for properly positioning the pile driving template by having the first row of collars fit over the last row of piles driven. Piles can then be placed in the three remaining rows of split collars in the pile driving template.

It is apparent from the foregoing that I have provided a new and improved pile driving template which greatly facilitates the accurate positioning of the piles and which also facilitates relatively high pile driving production.

I claim:

1. In a pile driving template, a longitudinal frame member, at least one pair of spaced parallel frame members secured to the longitudinal frame member and extending laterally therefrom, said pair of frame members defining an egress opening at the end away from said longitudinal frame member, a pulrality of split collar assemblies mounted between the members of the spaced parallel pair of frame members, each of the split collar assemblies being formed in at least two parts, one of the parts being connected to one of the pair of frame members, the other part being connected to the other of said pair of frame members, means mounted on the frame members operatively connected to the split collar assemblies for shifting the position of the split collar assemblies relative to the frame members to determine the precise position of the piles to be driven therethrough.

2. In a pile driving template, a framework defining a plurality of spaced parallel slots extending from a free side thereof and providing egress openings at said side for withdrawing said framework from rows of driven piles, a plurality of split collar assemblies mounted on said framework and being disposed in vertical alignment with said slots, at least one of said slots having a plurality of split collar assemblies therealong, each of the split collar assemblies being formed of at least two parts one of said parts being mounted to the framework on one side of the slot and the other part being mounted to the framework on the other side of the slot, said parts being movable between open and closed positions with respect to each other so that in closed position a pile receiving opening is formed and in open position a space is provided between the parts, said collar assemblies in open positions permitting the template to be moved in a direction to clear piles previously driven through the collar assemblies and to permit the piles to pass along the slots and out of the egress openings.

3. In a pile driving template for driving piles in an underwater formation, a framework floating on the water, the frame work including a plurality of spaced parallel members arranged in pairs and each forming an elongate slot and an egress opening at one end thereof, and a plurality of split collar assemblies mounted on said framework and being disposed between the members of each pair of parallel members, at least one of said pairs of parallel members having a plurality of split collar assemblies positioned therealong, each of the split collar assemblies being formed of at least two parts, one of said parts being mounted to the framework on one of said members of the pair of parallel members, the other part being mounted to the framework on the other member of the pair of members, the two parts being movable between open and closed positions with respect to each other so that in a closed position a pile receiving opening is formed and in an open position a space is provided between the parts, said collar assemblies in open position permitting the template to be moved in a direction to clear piles driven through the collar assemblies and to permit the piles to pass through the spaces between the parts and the egress openings.

4. A template as in claim **3** together with adjustable means operatively connected to the template for precisely positioning the template.

5. A template as in claim **3** together with adjustable means operatively connected to the template for precisely positioning the template, and means for precisely positioning the template, including split collars movable between open and closed positions, and means connected to said split collars for shifting the last named split collars in directions perpendicular to and parallel to the spaced parallel members.

6. In a pile driving template, a longitudinal frame member, a plurality of spaced parallel pairs of frame members secured to the longitudinal frame member and extending laterally therefrom and forming elongate slots with egress openings, a plurality of split collar assemblies disposed in registry with the slots and means mounted on the laterally extending frame members for shifting the position of the split collar assemblies to determine the precise position of the piles to be driven through, each of said split collar assemblies consisting of a pair of outer U-shaped frames one of said pair of outer U-shaped frames fixed to one of the pair of frame members, the other of said pair of outer U-shaped frames fixed to the other of said pair of frame members, a pair of inner U-shaped frames movably mounted in the outer U-shaped frames, and a collar section secured to each of the inner U-shaped frames, the collar sections facing each other, the inner U-shaped frames being movable in the outer U-shaped frames to permit the movement of the collar sections between open and closed positions in an area between laterally extending members.

7. A template as in claim **6** together with clamping means operatively connected to the collar sections for securing the two collar sections into a unitary assembly, and means operatively connected to the assembly for shifting the position of the unitary assembly.

8. A template as in claim **6** together with means operatively connected to the template for precisely positioning the template.

9. A template as in claim **6** wherein the collar sections on each pair of laterally extending frame members are in alignment so that when the collar sections are open, the template may be moved away from the piles in a sideways direction to clear the piles which have been driven.

10. In a pile driving template for driving a set of piles in predetermined rows, a framework including a plurality of pairs of members supported in spaced parallel relation

to form elongated slots with egresses for rows of driven piles, a plurality of split collar assemblies and means for mounting the split collar assemblies on the framework so that they are disposed in registry with the slots, the split collar assemblies being formed in at least two sections, one of said sections being connected to the framework on one side of the slot, the other section being connected to the framework on the other side of said slot, said means for mounting the split collar assemblies including means for shifting the position of at least one of the sections of each split collar assembly with respect to the other section to move the collar assembly into open and closed positions, the collar assembly in a closed position forming a pile receiving opening and in an open position forming a space between the sections so that the template can be moved to clear the piles.

11. In a pile driving template for driving a set of piles in predetermined rows, a framework including a longitudinal support member and a plurality of pairs of members supported in spaced parallel relationship and extending laterally away from said longitudinal support member to form a plurality of spaced parallel slots, said pairs of parallel members open at the ends remote from said longitudinal member to form a plurality of egresses permitting the template to be sidewise withdrawn from the rows of driven piles, a plurality of split collar assemblies and means for mounting the split collar assemblies on the frameworks so that they are disposed registery with the slots, the split collar assemblies being formed in at least two sections, one of said sections being connected to the framework on one side of the slot, and the other section being connected to the framework on the other side of the slot, said means for mounting the split collar assemblies including means for shifting the position of at least one of the sections of each split collar assembly with respect to the other section to move the collar assembly into open and closed positions, the collar assembly forming in the closed position a pile receiving opening and the open position forming a space between the sections so that the template can be moved to clear the pile.

12. In a pile driving template for driving a set of piles in predetermined rows, a framework including a plurality of pairs of members supported in spaced parallel relation to form a plurality of elongated slots, said pairs of members open at one end to form an egress for a row of driven piles, a plurality of split collar assemblies disposed in registry with the slots, means mounted on the laterally extending frame members for shifting the position of the split collar assemblies to determine the precise position of the piles to be driven through, each of said split collar assemblies consisting of a pair of outer U-shaped frames one of said pair of outer U-shaped frames fixed to one of the pair of frame members, the other of said pair of outer U-shaped frames fixed to the other of said pair of frame members, a pair of inner U-shaped frames movably mounted in the outer U-shaped frames, and a collar section secured to each of the inner U-shaped frames, the collar sections facing each other, the inner U-shaped frames being movable in the outer U-shaped frames to permit the movement of the collar sections between open and closed positions in an area between laterally extending members.

13. In a pile driving template a framework having a plurality of spaced parallel slots extending from a free side thereof and providing an egress opening at said side for withdrawing said framework from a set of driven piles, a plurality of split collar assemblies mounted on said framework and being disposed in vertical alignment with said slots each of the split collar assemblies being formed of at least two parts movable between open and closed positions with respect to each other so that in closed position a pile receiving opening is formed and in open position a space is provided between the parts permitting the template to be moved in a direction to clear the piles previously driven through the collar assemblies and to permit the piles to pass along the slots and out of the egress opening when the collar assemblies are in the open position, each of said split collar assemblies consisting of a pair of outer U-shaped frames, one of said outer U-shaped frames fixed to the framework adjacent one side of said slots, the other of said U-shaped frames fixed to the framework adjacent the other side of said slots, a pair of inner U-shaped frames movably mounted in the outer U-shaped frames, and a collar section secured to each of the inner U-shaped frames, the collar sections facing each other, the inner U-shaped frame is being movable in the outer U-shaped frames to permit the movement of the collar section between the open and the closed positions in the area defined by the slots.

References Cited by the Examiner

UNITED STATES PATENTS

2,651,181	9/1953	Alcorn et al.	61—63
2,892,314	6/1959	Hornsby et al.	61—46.5
3,107,496	10/1963	Suderow	61—46.5

CHARLES E. O'CONNELL, *Primary Examiner.*

JACOB SHAPIRO, EARL J. WITMER, *Examiners.*