May 7, 1929. E. STROSCHEIN 1,711,619

WASHING MACHINE WRINGER RELEASE

Filed Aug. 29, 1925

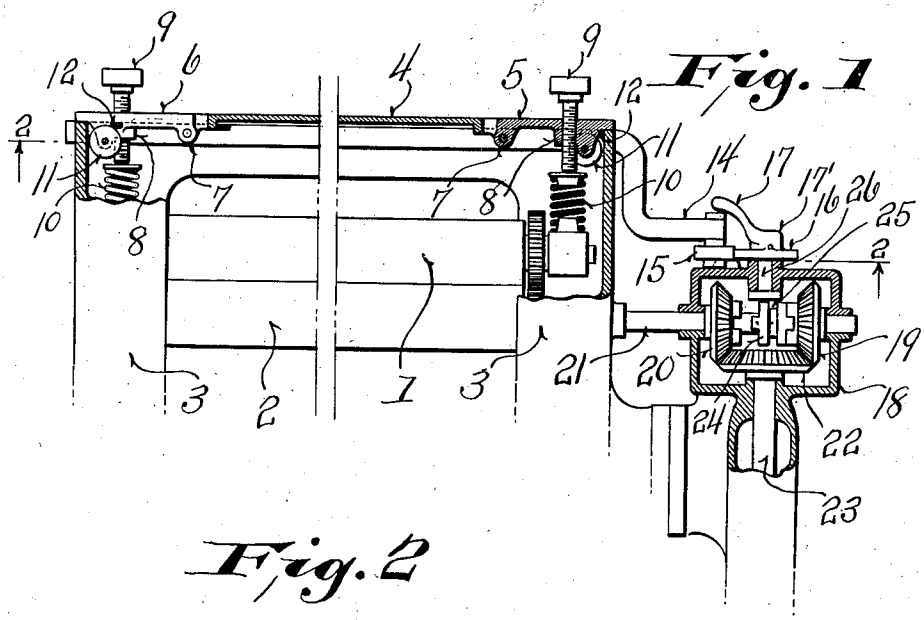

Fig. 1

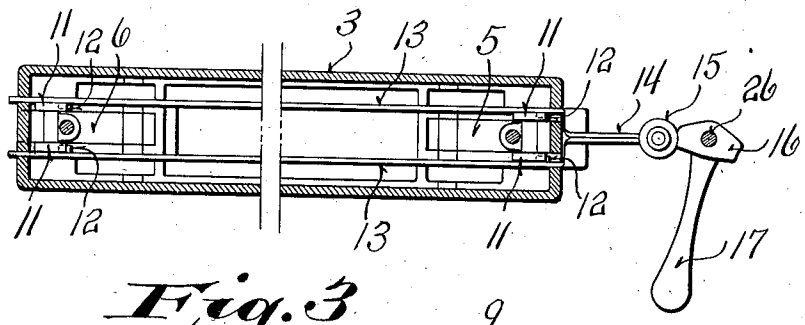

Fig. 2

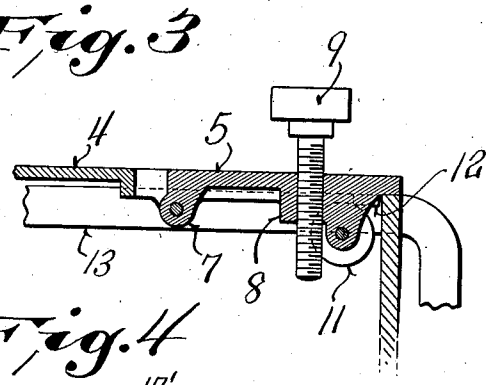

Fig. 3

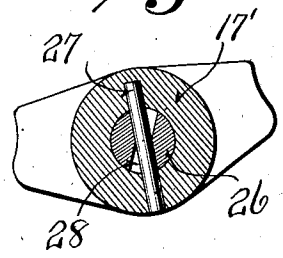

Fig. 4

Inventor:
Edward Stroschein
By
Attorneys

Patented May 7, 1929. 1,711,619

UNITED STATES PATENT OFFICE.

EDWARD STROSCHEIN, OF OSHKOSH, WISCONSIN, ASSIGNOR, BY MESNE ASSIGNMENTS, TO PRIMA MANUFACTURING COMPANY, INC., OF SIDNEY, OHIO, A CORPORATION OF OHIO.

WASHING-MACHINE-WRINGER RELEASE.

Application filed August 29, 1925. Serial No. 53,356.

This invention pertains to improvements in wringers, and more particularly to a motor driven wringer such as is employed in connection with washing machines.

At the present time all conventional types of washing machine wringers are provided with means for instantaneously releasing the pressure upon the top roller in event the clothes become tangled or wound upon the wringer or in case the operator's hands should accidently be caught between the wringer rolls. Present methods providing for the release of the pressure upon the rolls differ somewhat in mechanical structure, but such releases usually depend upon the manual operation of a release lever which is independent of the wringer drive control lever.

Apparatus which contains independent and unrelated levers for quick releasing means and for drive control means is objectionable in that the operator must first release the pressure from the rollers and then perform a subsequent operation to throw the driving means into neutral for stopping the rollers.

The present invention has primarily for its object to overcome the foregoing objections by the provision of a common control which, upon actuation, controls the engagement and disengagement in the driving train and the pressure and relief of pressure on the wringer rolls.

It is the object of my invention, further, to provide means whereby drive relation for rotating the wringer rolls and pressure upon the wringer rolls on the one hand, and the interruption of drive relation and relief of pressure, on the other hand, are respectively obtained in unison; further, to provide a manual control for a wringer arranged, by a movement of a manual control part in the same general direction to cause driving relation in the driving means for the wringer roll and pressure relation upon the wringer rolls; further, to provide novel means whereby such combined relations are obtained by movements of the manual control part in opposite directions from a given point; further, to provide novel means whereby movements of the manual control member in opposite directions along similar paths cause drive relation and pressure relation upon the wringer rolls and drive release and pressure release for the wringer rolls.

It is the object of my invention, further, to provide means whereby automatic pressure release upon the wringer rolls is had upon each drive release for said wringer rolls; and, further, to provide novel means whereby upon each drive engagement in the driving train for the wringer rolls pressure is imparted to the wringer rolls.

It is the object of my invention, further, to provide pressure means for wringer rolls arranged to be moved into pressure relation by a drive control part for rotation of the wringer rolls and to be automatically held in such pressure relation by said drive control part; further, to provide means whereby release in said pressure retaining means is automatically urged by the pressure on said rolls; and, further, to provide holding means for pressure maintaining means normally urged into disengaging relation and held from such disengaging relation by a drive controlling element; further, to provide cam means and a coacting part for pressure between the wringer rolls so arranged that the pressure upon the rolls normally automatically urges descent of the cam by said coacting part for release of said pressure between said pressure rolls; and, further, to provide novel means for resisting said automatic release by a member concerned in rotation of said wringer rolls.

A further object of the invention is to provide a washing machine wringer with means of the foregoing character which in no way interferes with, or requires alteration of the present types of drive controls.

A still further object is to provide a pressure releasing mechanism of the foregoing character which, upon actuation, releases pressure from both ends of the wringer roll.

An embodiment of the invention is shown in the accompanying drawings, in which:—

Figure 1 is an elevation partly in section of the device.

Figure 2 is a sectional view on the line 2—2 of Figure 1 looking up.

Figure 3 is an enlarged vertical sectional view through one corner of the release mechanism.

Figure 4 is an enlarged sectional view

through the hub of the operating handle and associated cam.

Referring to the drawings, it will be seen that a pair of wringer rolls 1 and 2 are carried in a suitable housing provided with uprights 3 preferably of channel construction. These uprights are connected by means of a top plate 4, as shown most clearly in Figures 1 and 3. The top plate is cut away at its ends and within these cut away portions a pair of levers 5 and 6 are mounted. These levers are provided with apertured bosses 7 which are pivotally joined to the top plate 4. The levers 5 and 6 extend in opposite directions and each is provided with an apertured threaded boss 8 through which the pressure adjusting screw 9 passes. These pressure adjusting screws control the pressures of the springs 10, such springs urging the upper roll 1 downwardly.

It is to be noted from reference to Figures 1 and 3 that each of the levers 5 and 6 is provided with a pair of rollers 11 adjacent the under side of their free or outer ends. These rollers, as most clearly shown in Figure 2, are positioned on opposite sides of their respective levers and are engaged under normal conditions by means of lugs 12 carried by a slide composed of a pair of strap-like members 13. This slide, composed of the strap-like members 13, passes through slots in the main housing 3 and the straps are brought together to form an outwardly projecting arm 14, such arm being bent downwardly and outwardly, as shown in Figure 1.

A roller 15 is carried on the under side of the arm 14 and engages a cam 16 integral with the control lever 17 for the drive mechanism for the wringer. This drive mechanism is preferably carried within a box-like housing 18, as shown in Figure 1, and may be of any suitable type. For example, a pair of bevel gears 19 and 20 may be loosely mounted upon the shaft 21 of the lower roller 2 and mesh with a driving bevel gear 22 driven from the shaft 23. A clutch member consisting of a slidable collar 24, splined in the usual manner to the shaft 21, is adapted to cooperate with either of the gears 19 or 20 to operatively connect the shaft with the respective gear upon shifting of the control lever or handle 17.

Preferably the clutch member 24 is operated by means of a pin 25 carried by the lower end of the short shaft 26. This short shaft 26 is operated by means of the handle 17, but it is to be noted that the hub 17′ of the handle has a loose or sloppy fit with the shaft. This is secured by providing a pin 27 in the hub 17′ and forming a slot-like aperture 28 in the shaft 26, so as to provide play of the cam member 16 with reference to the shaft 26 to a limited extent.

Assuming that the device is in operation and material has become wedged between the rollers, it is merely necessary to rock the lever 17 towards neutral position. This rocks the cam 16 and permits the roller 15, carried by the arm 14, to move outwardly.

This movement causes release of the clutches controlled by the clutch collar 24, placing this clutch collar in neutral position. It also moves the cam 16 so that a lower portion of the cam is complemental to the roller 15, thereby permitting automatic releasing movement of the slide for release of the levers 5 and 6, and release of pressure upon the wringer rolls. The pressure upon the wringer rolls preferably normally urges movement in release direction of the parts which resist such pressure.

Thus, in the present exemplification, the rollers 11 form cams, which are engaged by the resisting lugs 12. The contact points of these lugs contact the outer periphery of the rollers 11 and move the rollers downwardly, but preferably do not reach the uppermost point of said rollers or high points of the cams. The lugs 12 are therefore normally urged into pressure relieving relation or movement. This movement in the present exemplification is resisted by either one of the ends of the cam 16 while the clutches for forward rotation or reverse rotation of the wringer rolls are respectively in engagement.

The exemplified relation of the parts normally causes pressure of the roller 15 toward the cam 16. When the lugs 12 are released from their positions above the rollers 11, the levers 5 and 6 are permitted to rock upwardly for releasing the pressure upon the springs 10. Relieving pressure upon the wringer rolls at each release of driving connection insures that the wringer rolls are without pressure when not rotating and when idle, and avoids the dangers of continued pressure upon the rolls when the machine is not in use.

It will be seen that when wedging occurs it is merely necessary to operate the control lever and this in turn automatically releases the pressure upon the upper roll, thus relieving the pressure between the rolls and permtting the freeing of the obstructing material.

It will be seen that a substantially instantaneous response is secured by this construction and that the danger of damage due to wedging in the rolls has been reduced to a minimum.

It is to be distinctly understood that any suitable type of drive mechanism may be used for the wringer rolls and they may or may not be geared together. Further, any suitable type of springs may be employed for urging the rolls towards each other.

Although the invention has been described in considerable detail, it is to be understood that the invention may be variously embodied and is, therefore, to be limited only as claimed.

I claim:

1. In a device of the class described, the combination of a frame, a pair of wringer rolls mounted in said frame, one of said wringer rolls being movable with reference to said frame, means urging said movable wringer roll toward the other wringer roll including latch means pivoted to said frame, said latch means provided with a cam face normally urged in direction for releasing said latch, a control member provided with a part coacting with said cam face for retaining said latch means in latched relation and permitting unlatching movement of said latch means, drive mechanism for said rolls including a drive release member, and means connected with said control member and said drive release member for releasing said drive release member upon unlatching movement of said control member.

2. A wringer mechanism comprising a frame, a pair of rolls carried by said frame, one of said rolls being a driving roll, the other of said rolls being movable, a pair of springs mounted at opposite ends of the movable roll and urging such roll towards the driving roll, a pair of levers pivotally carried by said frame, means carried by said levers for engaging said springs, a slide carried by said frame, said slide and said levers having interlocking means for holding said levers in their normal positions, drive mechanism for said driving roll, a control lever for said driving mechanism, said slide and control lever being operatively coupled, whereby when said control lever is operated, said slide will automatically release said first mentioned levers.

3. A wringer mechanism comprising a pair of rolls, a frame carrying said rolls, a pair of levers adjacent the upper end of said frame and having their inner ends pivotally secured to said frame, said levers each having rollers adjacent their outer ends, a slide mounted lengthwise of said frame and having lugs engaging the rollers of said levers, springs held in pressure relation to one of said rolls by means of said levers, driving mechanism for said rolls, a control lever for said driving mechanism, and cam means connecting said control lever with said slide, whereby when said control lever is moved into neutral position said slide will release the rollers of said first mentioned levers.

4. A wringer mechanism comprising wringer rolls, releasable pressure means therefor comprising a part coacting with the wringer rolls for exerting pressure upon the wringer rolls, and cam means for said part including a cam having a cam face, a coacting slide comprising a contact part for said cam face, said cam face provided with an abruptly ascending portion and a slightly ascending portion presented to said contact part, and an operating part causing movement between said slide and said cam face for pressure relation between said rolls, said cam face being so arranged that during the fore part of said coacting movement said contact part coacts with said abruptly ascending cam portion and during the latter portion of said coacting movement said contact-part coacts with said slightly ascending cam portion.

5. A wringer mechanism comprising wringer rolls, and pressure means therefor comprising a pivoted lever, a pressure exerting part on said lever arranged to exert pressure on said rolls, a roller on said lever, a slide provided with a part coacting with the periphery of said roller, and means for moving said slide endwise for causing said last-named part to coact with said periphery and thereby force said roller and pressure exerting part in a direction to cause pressure upon said rolls, and arranged whereby endwise movement of said slide in the opposite direction releases said roller to release pressure from said rolls.

6. In a clothes wringer, the combination of a frame, a lever pivoted at each end of said frame, wringer rolls in said frame, said levers having operative connections with said rolls to exert pressure on said rolls, rollers on said levers, a slide extending lengthwise of said frame, said slide provided with contact parts for said rollers whereby to move said levers in pressure exerting direction for exerting pressure between said rolls, and a manual control lever having operative connection with said slide.

7. In a clothes wringer, the combination of a frame, a lever pivoted at each end of said frame, wringer rolls in said frame, said levers having operative connections with said rolls to exert pressure on said rolls, rollers on said levers, a slide extending lengthwise of said frame, said slide provided with contact parts for said rollers whereby to move said levers in pressure exerting direction for exerting pressure between said rolls, a manual control lever, and a cam operated thereby, said cam having contact connection with said slide for operating said slide.

8. In a clothes wringer, the combination of a frame, a lever pivoted at each end of said frame, wringer rolls in said frame, said levers having operative connections with said rolls to exert pressure on said rolls, a slide extending lengthwise of said frame, rollers and contact parts operatively arranged between and mounted on said levers and said slide, said contact parts coacting with said

rollers, and constructed and arranged for relative movement between said contact parts and said rollers to respectively exert and release pressure upon said rolls by movement of said slide, and a manual control lever causing said relative movements.

9. In a clothes wringer, the combination of a frame, a lever pivoted at each end of said frame, wringer rolls in said frame, means for rotating said wringer rolls including a releasable drive connection, said levers arranged to exert pressure on said rolls, a slide extending lengthwise of said frame, rollers and contact parts operatively arranged between and mounted on said levers and said slide, said contact parts coacting with said rollers, and constructed and arranged for relative movement between said contact parts and said rollers to respectively exert and release pressure upon said rolls by movement of said slide, and a manual control lever causing said relative movement and having operative connection with said releasable drive connection for shifting the latter.

In testimony that I claim the foregoing I have hereunto set my hand at Oshkosh, in the county of Winnebago and State of Wisconsin.

EDWARD STROSCHEIN.