(No Model.) 2 Sheets—Sheet 1.

H. E. OLMSTEAD.

RUNNING GEAR FOR VEHICLES.

No. 406,298. Patented July 2, 1889.

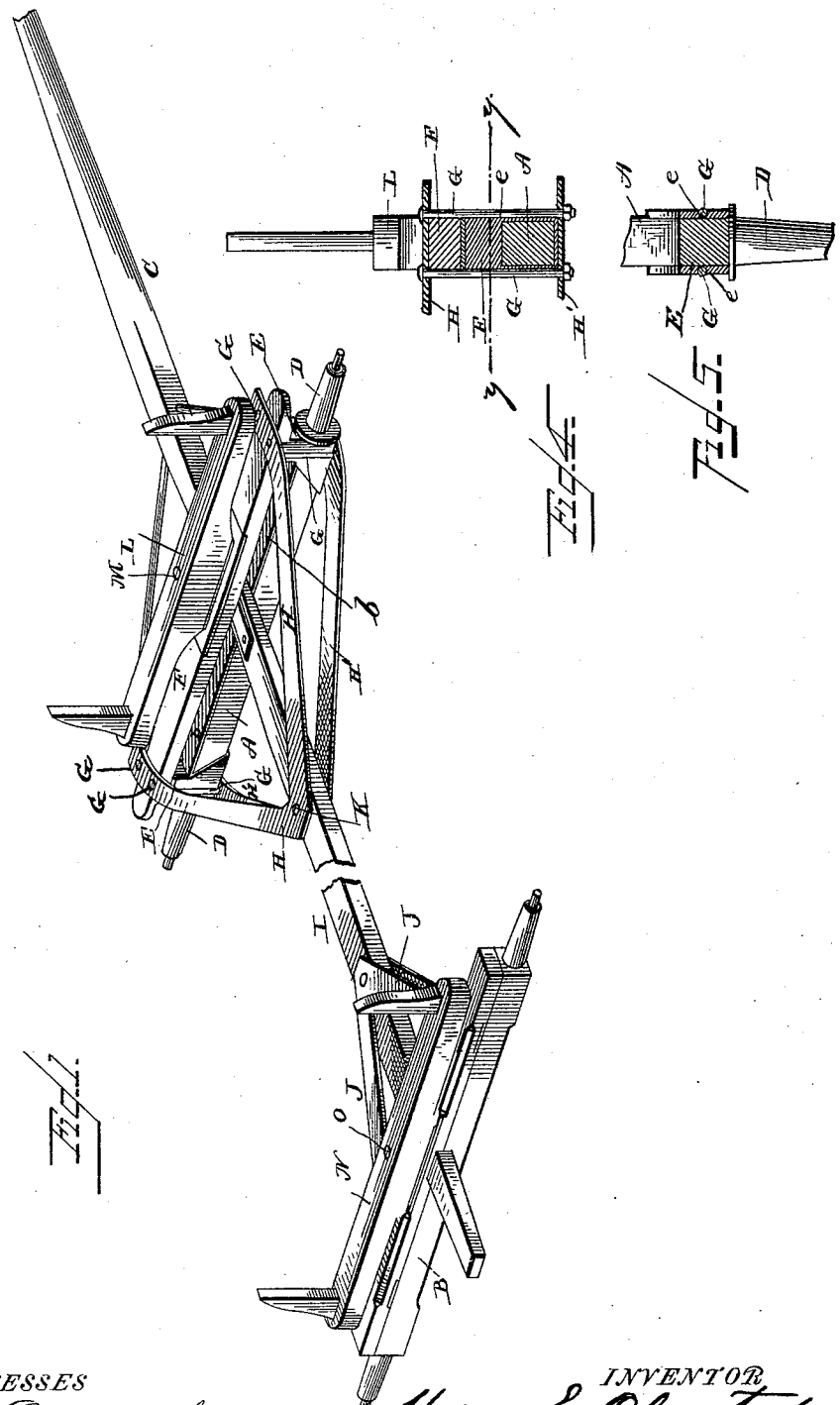

Fig. 1.

Fig. 2.

Fig. 3.

WITNESSES

F. L. Ourand.

Dennett S. Jones

INVENTOR

Homer E. Olmstead

by Louis Bagger & Co.

his Attorneys.

N. PETERS. Photo-Lithographer, Washington, D. C.

(No Model.) 2 Sheets—Sheet 2.

H. E. OLMSTEAD.

RUNNING GEAR FOR VEHICLES.

No. 406,298. Patented July 2, 1889.

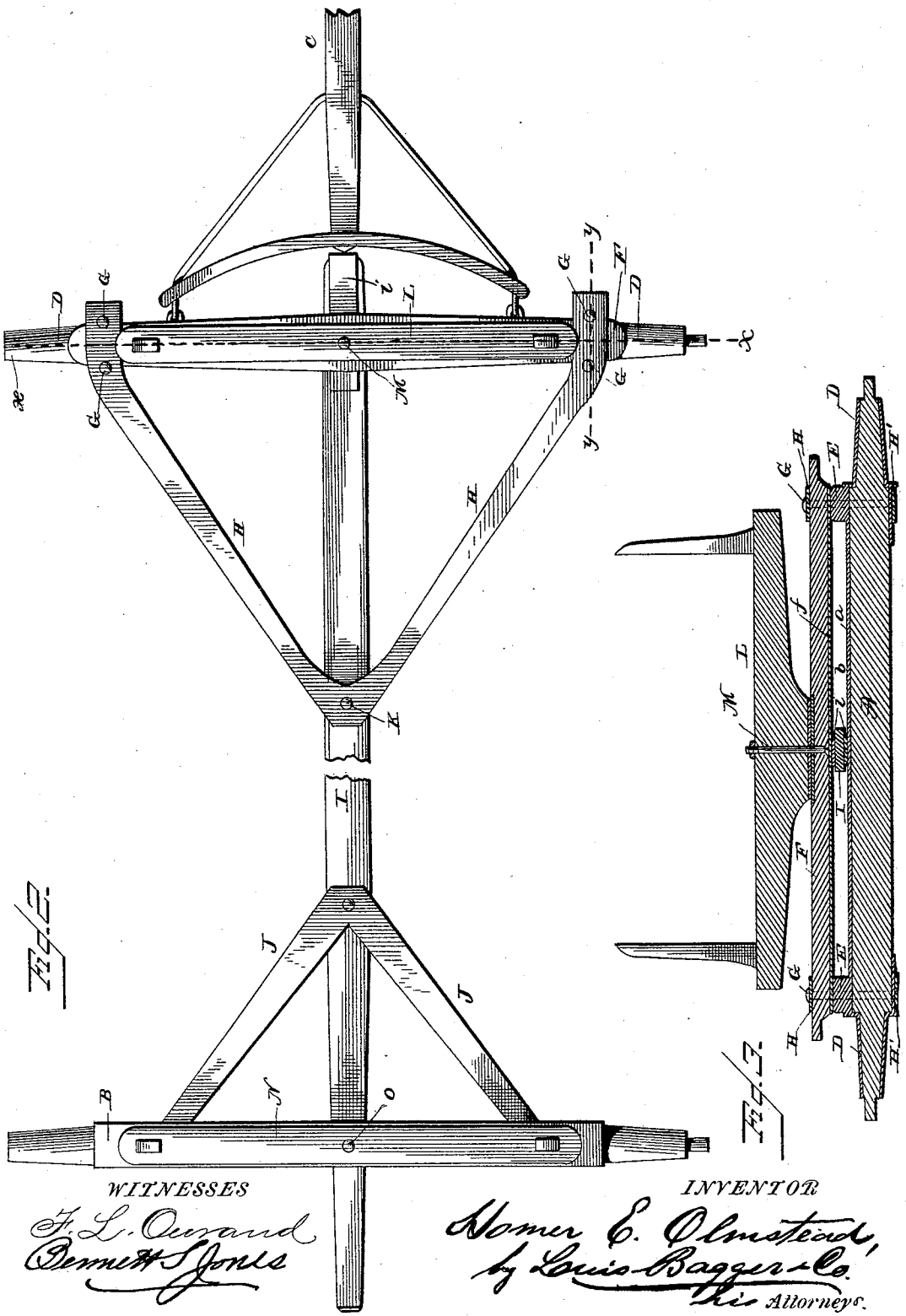

Fig. 1.

Fig. 2.

WITNESSES

F. L. Ourand

Bennett Jones

INVENTOR

Homer E. Olmstead,

by Louis Bagger & Co.

his Attorneys.

N. PETERS. Photo-Lithographer, Washington, D. C.

UNITED STATES PATENT OFFICE.

HOMER E. OLMSTEAD, OF DECATUR, MICHIGAN.

RUNNING-GEAR FOR VEHICLES.

SPECIFICATION forming part of Letters Patent No. 406,298, dated July 2, 1889.

Application filed February 6, 1889. Serial No. 298,889. (No model.)

To all whom it may concern:

Be it known that I, HOMER E. OLMSTEAD, a citizen of the United States, and a resident of Decatur, in the county of Van Buren and State of Michigan, have invented certain new and useful Improvements in Running-Gear for Vehicles; and I do hereby declare that the following is a full, clear, and exact description of the invention, which will enable others skilled in the art to which it appertains to make and use the same, reference being had to the accompanying drawings, which form a part of this specification, and in which—

Figure 1 is a perspective view of my improved running-gear. Fig. 2 is a top plan view of the same. Fig. 3 is a vertical sectional view on line *x x*, Fig. 2. Fig. 4 is a vertical cross-section on line *y y*, Fig. 2, at right angles to the view shown in Fig. 3; and Fig. 5 is a cross-section on line *z z* in Fig. 4.

Like letters of reference denote corresponding parts in all the figures.

This invention has relation to the running-gear of four-wheeled vehicles, and has for its object to strengthen the construction of the same and render it more durable; also, to facilitate turning of the vehicle on short curves, and, furthermore, to prevent the tongue or pole from whipping sidewise when one of the front wheels strikes an obstruction in the road.

To these several ends my invention consists in the improved construction and combination of parts, as will be hereinafter more fully described and claimed.

Reference being had to the accompanying two sheets of drawings, the letter A designates the front axle, B the hind axle, and C the tongue or pole. The thimbles D of the front axle are cast with raised bearings E, which support the sand-bar F, so as to leave a narrow space *b* between the under side of the sand-bar and the upper side of the axle. These bearings E E have their sides grooved or recessed, as shown at *e*, to receive bolts G G, one on each side, whereby the sand-bar is clipped upon the axle, and which said bolts also form means of attachment for the rearwardly-extending hound-plates H and H'. These plates or bars, as will be seen from the drawings, are of a V shape, the diverging ends of the upper plate H being firmly fastened upon and at opposite ends of the front sand-bar, while the diverging ends of the lower plate H' are correspondingly secured upon the under side of the axle, one at each end, the ends of both plates being firmly secured in their proper positions by the clip-bolts G, which, as we have seen, also serve to connect the sand-bar to the front axle.

The reach (shown at I) is fastened to the rear axle in any desired manner, and is braced thereto by the usual hounds J; but the forward end of the reach, instead of being coupled to the front axle, as usual, projects through the slot or narrow space *b* between the front axle and its sand-bar. To avoid undue wear of these parts, and also for the purpose of reducing friction to a minimum, the under side of the sand-bar and the upper side of the axle may be protected by metallic chafing-plates *f* and *a*, while the projecting forward end of the reach, if made of wood, may be sheathed by a metallic tip *i*. That part of the reach which projects between the apex of the two coinciding hound-plates H and H' is coupled thereto by a bolt K, which therefore takes the place of the usual "king-bolt" in running-gear, as ordinarily constructed.

The front bolster L is swiveled upon the front sand-bar by a bolt M, in the usual manner, which does not, however, project down into the slot *b* below the sand-bar, but is cut off flush with the under side of the latter, so as not to impede free motion of the forward end of the reach in its slot or bearing. The hind bolster N is swiveled upon the rear sand-bar by another bolt O, which, if desired, may also form the means of attachment of the rear end of the reach to the hind axle.

From the foregoing description, taken in connection with the drawings, the operation and advantages of my improved running-gear will be understood at a glance. It will be seen that the wagon may be turned on a very short curve; also, that as the draft or "pull" on the back part of the wagon is at a point K, a considerable distance back of the front axle, the tongue will not whip sidewise and strike the team when the wheels happen to strike a stone, stump, or other obstruction. Again, by fastening the sand-bar upon the front axle in

the manner described, the axle is not weakened by boring holes through it for the insertion of bolts. Finally, the construction, as a whole, is such as to greatly strengthen all the parts which enter into combination with one another.

Having thus described my invention, I claim and desire to secure by Letters Patent of the United States—

In a running-gear for vehicles, the front axle and sand-bar provided with chafing-plates, the thimbles having raised bearings for supporting the sand-bar above the axle, the reach passing through the space between the sand-bar and axle, and the hound-plates connecting the sand-bar and axle with the reach, all arranged substantially as and for the purpose described.

In testimony that I claim the foregoing as my own I have hereunto affixed my signature in presence of two witnesses.

HOMER E. OLMSTEAD.

Witnesses:
ALVIN BENNETT,
OSA H. MCDALE.