J. W. HARKOM.

VALVE.

APPLICATION FILED MAY 9, 1913.

1,112,135.

Patented Sept. 29, 1914.

2 SHEETS—SHEET 1.

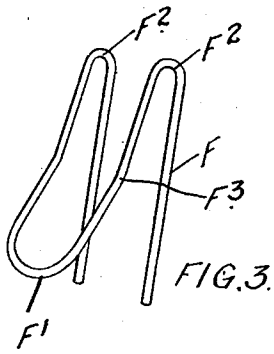

FIG. 3.

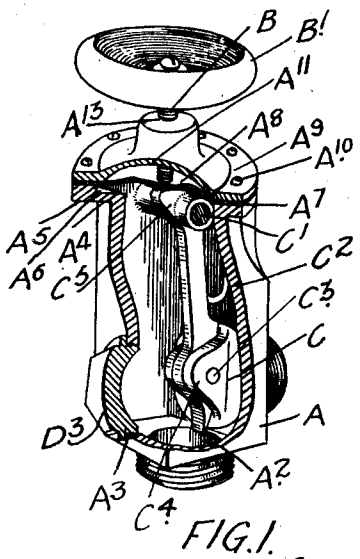

FIG. 1.

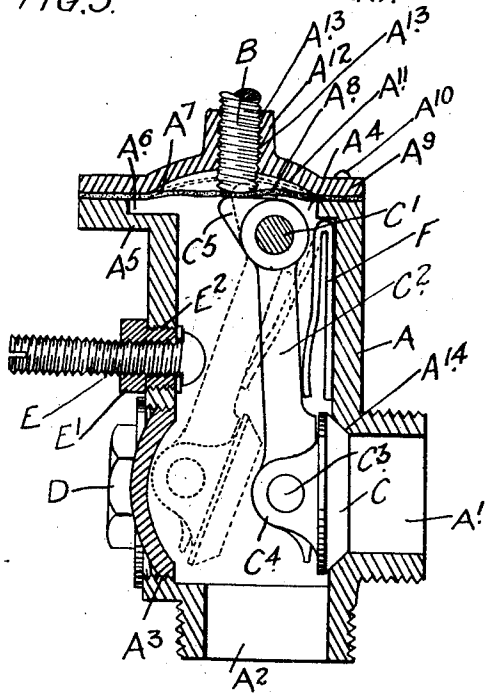

FIG. 2.

WITNESSES

H. T. S. Young

L. V. Head

INVENTOR

J. W. HARKOM

by Fred. B. Fetherstonhaugh

atty.

THE NORRIS PETERS CO., PHOTO-LITHO., WASHINGTON, D. C.

J. W. HARKOM.

VALVE.

APPLICATION FILED MAY 9, 1913.

1,112,135.

Patented Sept. 29, 1914.

2 SHEETS—SHEET 2.

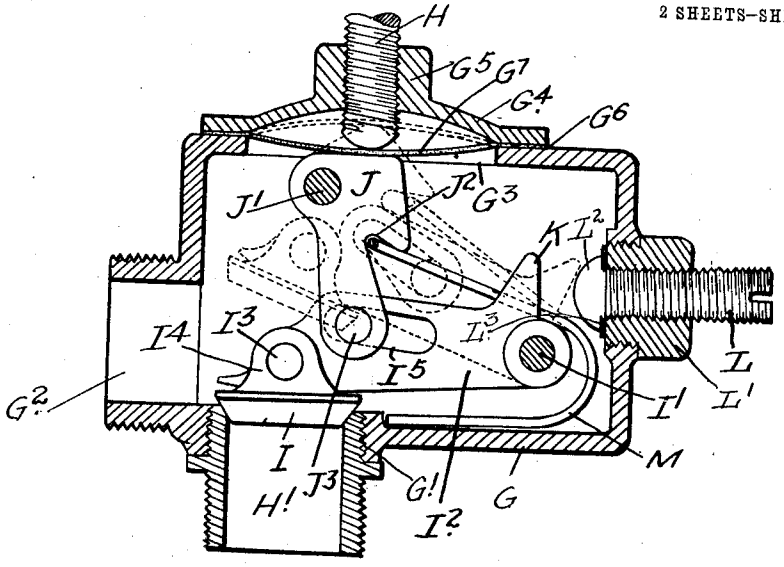

FIG. 4.

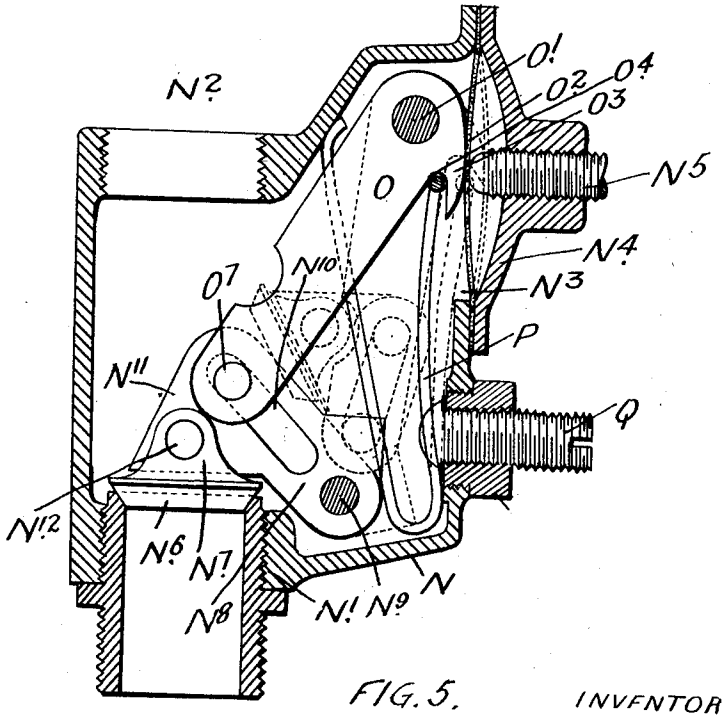

FIG. 5.

WITNESSES

H. J. S. Young

L. V. Keck

INVENTOR

J. W. HARKOM

by Fred. B. Fetherstonhaugh.

atty.

THE NORRIS PETERS CO., PHOTO-LITHO., WASHINGTON, D. C.

UNITED STATES PATENT OFFICE.

JOHN WILLIAM HARKOM, OF MELBOURNE, QUEBEC, CANADA.

VALVE.

1,112,135. Specification of Letters Patent. Patented Sept. 29, 1914.

Application filed May 9, 1913. Serial No. 766,545.

To all whom it may concern:

Be it known that I, JOHN WILLIAM HARKOM, of the village of Melbourne, in the county of Richmond, in the Province of Quebec, Canada, have invented certain new and useful Improvements in Valves, of which the following is the specification.

My invention relates to improvements in valves and the object of the invention is to provide a valve having a passage for the fluid entirely unobstructed either by the valve head or valve operating mechanism, in which the valve head may be locked tight on its seat to prevent the inlet of steam into the valve casing during the renewal of the packing, in which the valve seat may be easily removed, and in which the valve seat may be easily gotten at for the purpose of regrinding and it consists essentially of a valve casing having an outlet port and an inlet port provided with a valve seat, a valve therefor and resilient means designed to raise the valve off its seat into a position out of the path of the travel of the fluid passing through the casing from inlet to the outlet port and means also out of the path of the fluid for forcing the valve closed, a locking device designed to hold the valve head tight on its seat and a removable valve seat as hereinafter more particularly explained by the following specification.

Figure 1, is a perspective view of my valve designed for low pressure partially broken away and in section to exhibit the interior construction thereof. Fig. 2, is an enlarged vertical section through Fig. 1. Fig. 3, is an enlarged perspective view of the operating spring. Fig. 4, is a sectional view showing a modification of my valve adapted for high pressure. Fig. 5, is a further modification of my valve as adapted for high or low pressures.

In the drawings like letters of reference indicate corresponding parts in each figure.

In Figs. 1 and 2 A is a valve casing provided with an inlet port A^1, an outlet port A^2 and an internally threaded opening A^3 formed in the wall of the casing opposite the inlet port A^1 and in alinement therewith. A^4 is an opening in the wall of the casing opposite the outlet port A^2. A^5 is a flange extending outwardly from the casing A around the opening A^4, such flange being provided with a recess A^6. A^7 is a metallic diaphragm secured around its edge to the face of the flange A^5 and provided with a normally upwardly arched central portion A^8. A^9 is a cap secured to the flange A^5 by tap screws A^{10}. The inner face of the cap is provided with an arched recess A^{11} into which the arched portion A^8 of the diaphragm A^7 normally fits. A^{12} is a boss extending outwardly from the cap A^9 and provided with an internally threaded orifice A^{13}. B is a threaded operating stem of the valve provided with a suitable handle B^1. The stem B is threaded into the orifice A^{13} so that the inner end bears against the arched portion A^8 of the diaphragm A^7. A^{14} is a valve seat formed around the inlet orifice A^1. C is a valve fitting the valve seat A^{14}. C^1 is a pin extending through the valve casing in proximity to the diaphragm A^7. C^2 is a lever arm pivoted at one end on the pin C^1 and connected at the opposite end by a pin C^3 extending through lugs C^4 formed integral with the valve C. C^5 is a lever arm extending from the inner end of the lever arm C^2 against the arch portion A^8 of the diaphragm A^7. D is a threaded plug fitting the internally threaded orifice A^3. E is a locking screw extending through the bushing nut E^1 threaded into the orifice E^2 of the valve casing. The screw E is normally in the position shown in full lines.

F is an operating spring comprising a U-shaped portion F^1 (see Fig. 3), the arms of which are bent backwardly upon themselves in U-shape form F^2, that portion of the spring extending between the U-shape portion F^2 and the U-shaped portion F^1 is bent slightly into an obtuse angle at F^3. The spring F is located between the casing A and the lever arm C^2 so as to bear against the under face of the lever to hold the lever arm C^5 against the diaphragm A^7.

When it is desired to open the valve I unscrew the operating stem B allowing the resilient washer A^7 to resume its normal arch-shaped form. The spring F then carries the lever arm C^2 upwardly and the valve C away from its seat A^{14} in an arc-shaped direction. When closing the valve the stem B is threaded through the orifice A^{13} against the arch shaped diaphragm A^7 forcing the cam portion C^5 inwardly and the lever arm C^2 against the tension of the spirng F and carrying the valve C on to its seat. When it is desired to permanently lock the valve in this position so as to prevent the fluid flowing into the valve casing the screw E is threaded through the bushing E^1 against the

lever arm C^2. The cap A^9 may then be removed and the diaphragm A^7 may be replaced by a new one if required without allowing the escape of steam or other fluid.

In Fig. 4, I have shown the same principle of construction of valve as applied to high pressure. I will now describe this form in detail. G is the valve casing provided with an inlet port G^1 and an outlet port G^2 and an orifice G^3 over which extends the covering cap G^4 provided with an internally threaded boss G^5. Between the flanges of the cap G^4 and the casing a diaphragm G^6 is inserted provided with an arch-shaped portion G^7. H is a stem threaded into the orifice of the boss G^5 against the arch-shaped portion G^7 of the diaphragm G^6. H^1 is a removable seat which is threaded into the threaded orifice G^1 forming the inlet port. I is a valve head. I^1 is a pin extending through the valve casing to one side of the inlet port G^1. I^2 is a lever swung upon the pin I^1 and connected to the valve I by a pin I^3 extending through the lugs I^4 carried by the valve I. I^5 is a slot formed in the lever I^2. J is a supplemental lever pivoted upon a pin J^1 extending into the valve casing. The lever J is provided with a notched portion J^2 and a pin J^3 extending into the slot I^5. K is a lug which constitutes one arm of the lever I^2. L is a locking screw extending through a bushing L^1 and provided with a head L^2 provided with a soft washer L^3 designed when the locking screw is withdrawn to bear against the wall of the casing and form a fluid tight joint with the casing G opposite the lug K. M is a spring bent in substantially V-shaped form and having one arm resting against the side of the casing and the other arm entering the notch J^2 of the supplemental lever J.

By unscrewing the stem H the arch portion of the diaphragm assumes the position shown in dotted lines and the spring M then acts to swing the lever J into the dotted position, the pin J^3 moving along the slot I^5 thereby gradually swinging the arm of the lever I^2 which carries the valve upwardly carrying the valve I to the dotted position shown, out of the path of the liquid passing between the inlet port G^1 and the outlet port G^2.

When it is desired to lock the valve closed, for the purpose of repairing the packing the screw L is threaded against the lug K securely holding the valve I in its closed position.

Where a straight way valve is required, that is to say, with the inlet port directly in alinement with the outlet port I have provided the construction shown in Fig. 5. In this form the casing N is provided with an inlet port N^1 and an outlet port N^2 in alinement therewith. In the face of the valve casing parallel with the path of the fluid is formed an opening N^3 provided with a covering cap N^4 in which the operating valve stem N^5 is threaded. N^6 is the valve head provided with lugs N^7. N^8 is a lever pivoted to one side of the inlet port N^1 on a pin N^9. N^{10} is a slot formed in the lever N^8. The lever N^8 extends upwardly in an inclined direction over the valve head N^6 and is provided with a lateral extension N^{11} through which and the lugs N^7 extends a pin N^{12}. O is a supplemental lever pivoted on a pin O^1 in proximity to the diaphragm O^2. The supplemental lever O is provided with a cam extension O^3 bearing against the diaphragm O^2 and forming a notch O^4 into which an operating spring P extends. The supplemental lever O extends substantially at right angles to the slot N^{10} in the lever N^8 and is provided with a pin O^7 extending into the slot N^{10}. By this mechanism when the operating valve stem N^5 is unscrewed and the diaphragm O^2 assumes its normal position shown by dotted lines the spring P forces the lever O into the position shown by dotted lines carrying the lever N^8 and valve head N^7 outwardly in an arched direction into the dotted position out of alinement with the inlet and outlet orifices N^1 and N^2. Q is a locking screw which is threaded inwardly against the lever N^8 thereby locking the valve head N^6 securely on its seat when required.

From this description it will be seen that I have devised very simple constructions of valves adapted both for high and low pressures to either angle or straight way valves through which there is an unobstructed flow of fluid when the valve is opened, in which the valve may be easily locked in position to prevent the flow of steam through the valve when it is desired to remove the packing of the valve and which can be made absolutely fluid tight, and in which the seat of the valve may be easily gotten at for the purpose of regrinding.

What I claim as my invention is—

1. In a valve, the combination with the valve casing having an outlet port and an inlet port provided with a valve seat, of a valve co-acting with the valve seat, an operating valve mechanism extending through the casing out of alinement with the inlet port, and a lever co-acting with the operating mechanism to hold the valve on its seat and a spring to move the valve out of the path of the fluid between the inlet and outlet ports when the pressure of the operating mechanism is removed from said lever.

2. In a valve, the combination with the valve casing having an outlet port and an inlet port provided with a valve seat, of a valve co-acting with the valve seat, a lever pivoted at one end to the valve and at the

opposite end to the casing at one side of the inlet port and resilient means for throwing the end of the lever upwardly in an arc-shaped direction to carry the valve off its seat and out of the path of the fluid flowing between the inlet and outlet ports, and means for forcing the valve closed against such resilient means, as and for the purpose specified.

3. In a valve, the combination with the valve casing having an outlet port and an inlet port provided with a valve seat, of a valve co-acting with the valve seat, a lever pivoted to the casing at one end at one side of the valve seat and to the valve at the opposite end and an operating mechanism extending through the casing and co-acting with the lever to lower the valve in an arc-shaped direction on to its seat, and a resilient means for raising the valve out of the path of the fluid flowing between the inlet and outlet ports when the valve operating mechanism is withdrawn, as and for the purpose specified.

4. In a valve, the combination with the valve casing having an outlet port and an inlet port having a valve seat, of a valve co-acting with the valve seat, an orifice in the valve casing out of the path of the fluid travel, a resilient imperforate diaphragm extending over the orifice, a covering cap extending over the diaphragm and secured to the casing, a valve operating mechanism bearing against the diaphragm, and a lever having a tail piece bearing against the diaphragm and pivotally supporting the valve at its opposite end, and resilient means for raising the valve off its seat, as and for the purpose specified.

5. In a valve, the combination with the valve casing having an inlet and an outlet port, of a valve co-acting with the inlet port, resilient means for raising the valve off its seat in an arc-shaped direction, mechanism for operating the valve, and means independent of the valve operating mechanism for locking the valve tight on its seat, as and for the purpose specified.

6. In a valve, the combination with the valve casing having an inlet and an outlet port and provided with a valve seat, a lever pivoted at one side of the valve seat and pivotally connected with the valve, a set screw threaded in the casing and designed to be screwed against the lever to lock the valve in its closed position, and a valve operating mechanism co-acting with the lever to close the valve, and resilient means for raising the lever which carries the valve on its pivot when the valve operating mechanism is withdrawn, as and for the purpose specified.

JOHN WILLIAM HARKOM.

Witnesses:
B. Boyd.
M. Egan.

Copies of this patent may be obtained for five cents each, by addressing the "Commissioner of Patents, Washington, D. C."