(No Model.)

R. E. ALFRED.

LAMP CHIMNEY HOLDER.

No. 590,608. Patented Sept. 28, 1897.

Fig. 1.

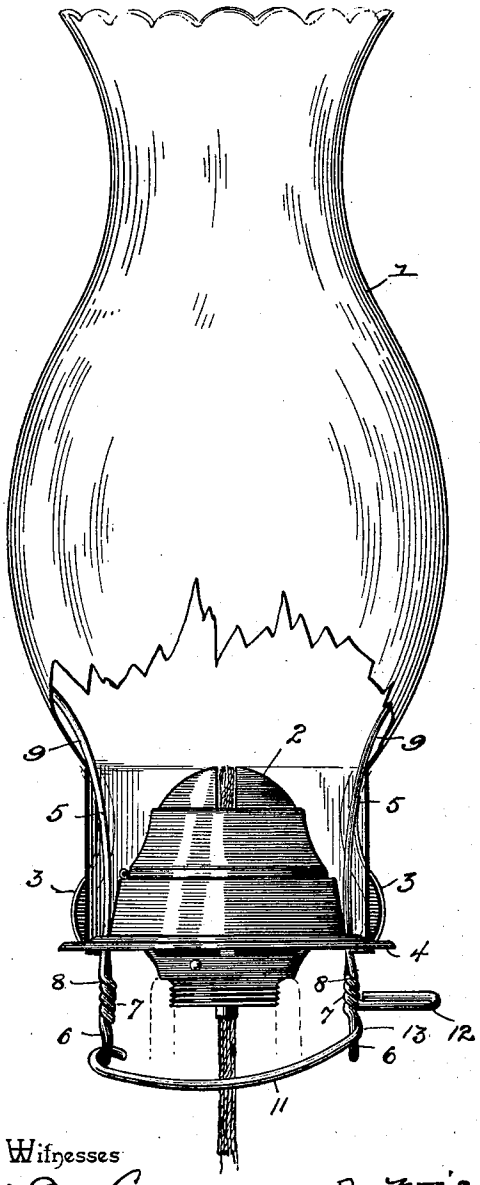

Fig. 3.

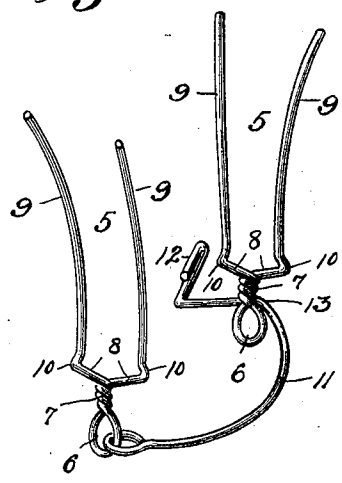

Fig. 2.

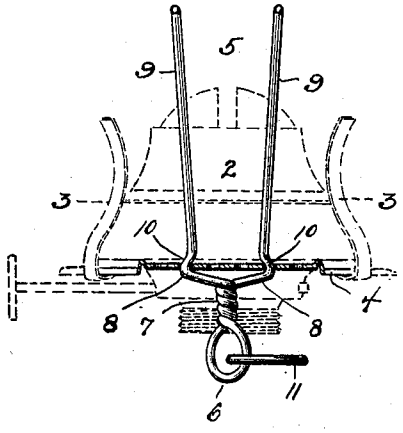

Inventor

Ralph E. Alfred,

Witnesses

E. N. Monroe

V. B. Hillyard.

By his Attorneys,

C. A. Snow & Co.

THE NORRIS PETERS CO., PHOTO-LITHO., WASHINGTON, D. C.

UNITED STATES PATENT OFFICE.

RALPH E. ALFRED, OF WESTON, WEST VIRGINIA.

LAMP-CHIMNEY HOLDER.

SPECIFICATION forming part of Letters Patent No. 590,608, dated September 28, 1897.

Application filed January 27, 1897. Serial No. 620,939. (No model.)

To all whom it may concern:

Be it known that I, RALPH E. ALFRED, a citizen of the United States, residing at Weston, in the county of Lewis and State of West Virginia, have invented a new and useful Lamp-Chimney Holder, of which the following is a specification.

This invention relates to that class of burners which operate in conjunction with chimneys and which are provided with an inner and an outer set of holders to secure the chimney in place against accidental slipping when handling, jarring, or tipping the lamp.

The invention deals directly with the inner holders, the manner of supporting them, and the means for spreading the active or free ends of the holders, whereby they are caused to positively grip the inner sides of the chimney and hold it in place.

For a full understanding of the merits and advantages of the invention reference is to be had to the accompanying drawings and the following description.

The improvement is susceptible of various changes in the form, proportion, and the minor details of construction without departing from the principle or sacrificing any of the advantages thereof, and to a full disclosure of the invention an adaptation thereof is shown in the accompanying drawings, in which—

Figure 1 is an elevation of a burner and chimney of ordinary construction, showing the invention applied, the lower portion of the chimney being broken away. Fig. 2 is a front view of a holder, showing the manner of attaching it to the gallery of a burner. Fig. 3 is a perspective view of the invention.

Corresponding and like parts are referred to in the following description and indicated in the several views of the drawings by the same reference-characters.

The chimney 1 and burner 2 are of ordinary form, and the burner is provided with the usual holders 3 for engaging with the outer side of the chimney for retaining it in place upon the gallery 4. The inner holders 5 are of like formation and are disposed at diametrically opposite points and are constructed of a single length of wire doubled upon itself, forming an eye 6, twisted to provide a shank 7 and having its end portions bent outwardly in opposite directions, as shown at 8, thence forwardly, forming arms 9, which curve throughout their length, whereby the outer or free ends of the said arms 9 will engage with the chimney above the neck or contracted base portion and retain it in place. The arms 9 have kinks or offsets 10 at their juncture with the base portions 8, which receive portions of the gallery 4, thereby retaining the holders in place. The wire employed in the formation of the holders 5 is of proper gage to secure the desired elasticity to the arms 9, whereby injury to the chimney is obviated when spreading the holders at their upper ends to hold the chimney in place.

The holders constructed substantially as set forth are secured to the burner by thrusting the free ends of the arms 9 through suitable perforations in the gallery 4 and forcing the holder forward until the bent portions 10 spring over portions of the gallery bordering upon the openings through which the arms 9 pass, when the connection is complete. The holders tilt upon the bent parts 10 as journals, and by pressing the lower ends or shank portions together the upper ends of the holders are spread and engage with the inner sides of the chimney and secure the latter in place.

A lock 11 holds the lower ends of the parts 5 together, and consists of a curved wire secured at one end to the shank of a holder 5 and detachably connected at its opposite end to the shank portion of the other holder, and this wire may have a hook at one end, as shown in Fig. 1, or an eye, as shown in Fig. 3, to engage with the eye 6 of a shank, and its opposite end is bent to provide a finger-hold 12 for manipulating the lock when required. The wire forming the lock is curved so as to span the neck of the lamp or the part to which the burner is attached, and the end portion adjacent to the finger-hold 12 is bent, as shown at 13, to receive the shank of the holder 5, with which it engages, so as to prevent accidental disengagement therefrom when the invention is in service.

Having thus described the invention, what is claimed as new is—

1. A holder for chimneys, consisting of holders applied to the burner at opposite points and having projecting shank portions to be brought together for spreading the upper ends of the holders for securing the chim-

ney in place, and a lock consisting of a curved wire adapted to be engaged at its opposite ends with the projecting shank portions of the holders to secure the latter when their upper ends are spread, substantially as and for the purpose set forth.

2. A holder for a burner having a perforate gallery, consisting of a wire bent to provide a shank portion and approximately parallel arms, and having kinks or offsets formed in the arms adjacent to the base portions, whereby the holder is pivotally supported and retained in place when thrust through suitable openings in the gallery, substantially as set forth.

3. The combination with a burner, of oppositely-disposed holders applied thereto and having projecting shank portions, and a lock consisting of a curved wire having one end constructed to engage with the shank of a holder and having its opposite end bent to provide a finger-hold and to make positive engagement with the shank of the opposite holder, substantially as specified.

In testimony that I claim the foregoing as my own I have hereto affixed my signature in the presence of two witnesses.

R. E. ALFRED.

Witnesses:
PERRY G. ALFRED,
B. WHITE.