2 Sheets—Sheet 1.

# F. MARX & J. N. BLASI.

## AUTOMATIC-FANS.

No. 193,886. Patented Aug. 7, 1877.

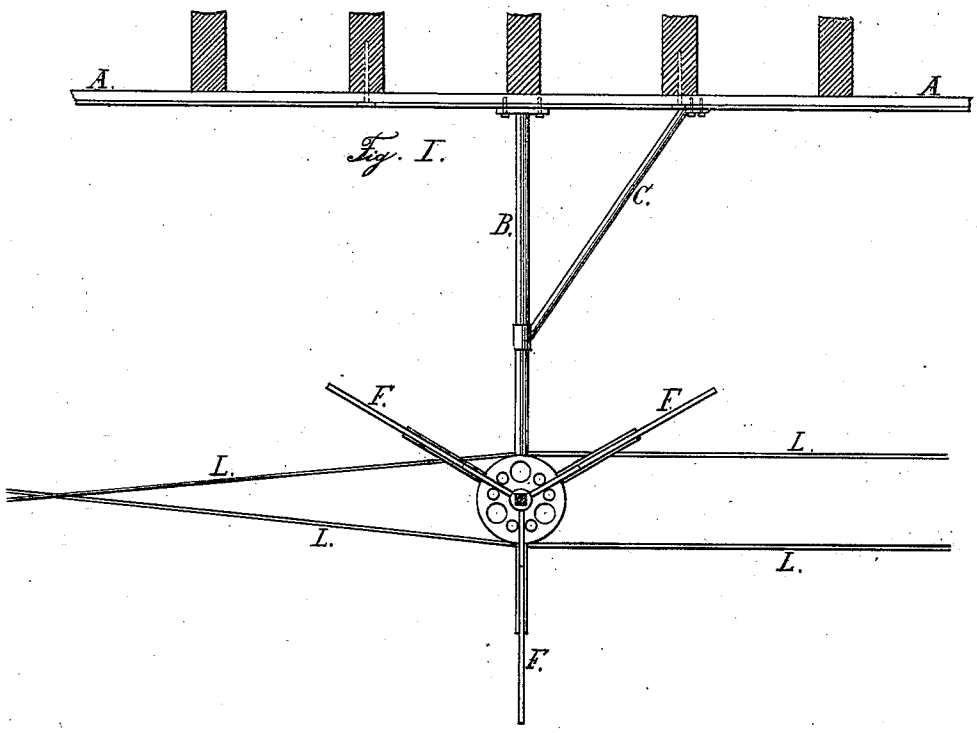


Fig. I.

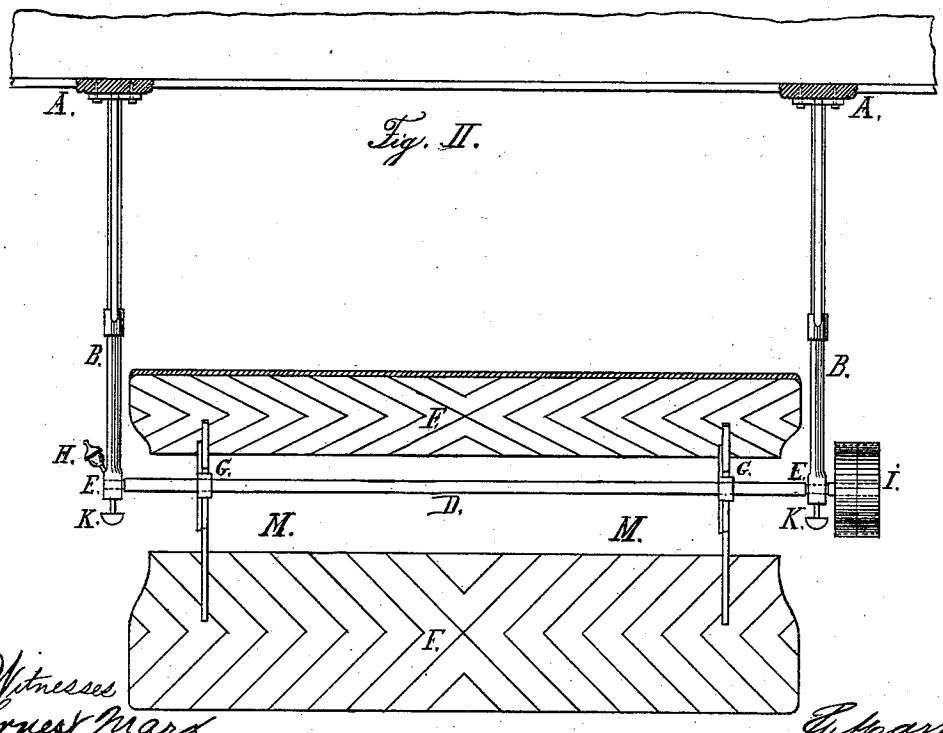


Fig. II.

Witnesses
Ernest Marx
Charles Raubs.

Edward Marx
John N. Blasi

N. PETERS, PHOTO-LITHOGRAPHER, WASHINGTON, D. C.

2 Sheets—Sheet 2.

# F. MARX & J. N. BLASI.

## AUTOMATIC-FANS.

No. 193,886. Patented Aug. 7, 1877.

*Fig. III.*

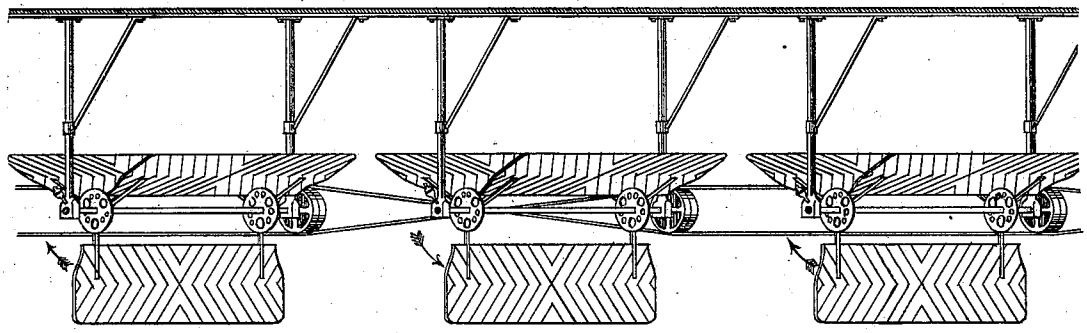

Witnesses
Ernest Marx
Charles Rauls

F. Marx
John N. Blasi

N. PETERS, PHOTO-LITHOGRAPHER, WASHINGTON, D. C.

# UNITED STATES PATENT OFFICE.

FELIX MARX AND JOHN N. BLASI, OF NEW YORK, N. Y.

## IMPROVEMENT IN AUTOMATIC FANS.

Specification forming part of Letters Patent No. **193,886**, dated August 7, 1877; application filed June 7, 1877.

*To all whom it may concern:*

Be it known that we, FELIX MARX and JOHN N. BLASI, both of the city, county, and State of New York, have invented new and useful improvements in Fans adapted to restaurants, dining-rooms, private dwellings, railways, mines, factories, &c. The fans are fastened to the ceiling, revolving horizontally in opposite directions, thereby forming a continual current of cool air, which invention is fully set forth in the following specification, reference being made to accompanying drawings.

A in Figure I represents strips of wood fastened to beams, whereon to screw hangers B, which are made of gas-pipe or other metal, and are steadied by braces C, running at an angle from strips A to hanger B; shaft D, Fig. II, being front view, is made of iron, of any size, or other metal, according to size of fans, which revolves or turns in boxes E, which are made of box or other metal, lined with Babbitt metal, rendering shaft D noiseless, which has been one of our chief objects in obtaining a perfect piece of machinery. Lubricator H, (self-feeder) oils-box E, and drip-cup K receives waste oil under box E. The flange G, as shown in Fig. II, is fastened to shaft D by set-screw, and holds the wings F in proper positions. The flange is made of wood or metal, and wings F of any material, such as tin, wood, canvas, &c. The belts L cross at every other fan, making them revolve in opposite directions, and against each other. I, the double pulley, so that one fan becomes the driving-power of the next, &c. M is the open space between shaft D and the wing F to give the fans the power of producing a continual current of cool air.

Fig. III is a general view of the fans in operation, which can be driven by any motor.

What we claim as our invention, and desire to secure by Letters Patent, is—

The combination of two or more horizontal fans in a frame arranged to revolve in opposite directions, substantially as described and shown, and for the purpose specified.

New York, June 6, 1877.

F. MARX.
JOHN N. BLASI.

Witnesses:
ERNEST MARX,
CHARLES RAUBS.