J. C. STEARNS.

SPOTLIGHT SUPPORT.

APPLICATION FILED MAY 31, 1921.

1,424,687.

Patented Aug. 1, 1922.

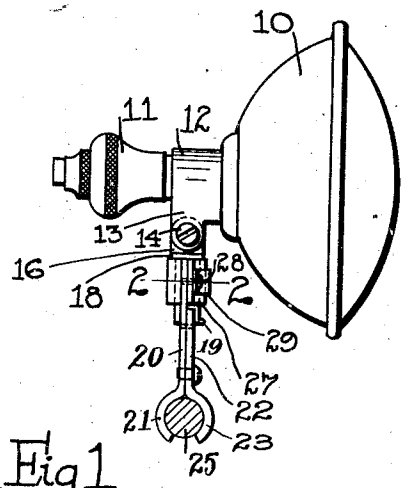

Fig.1.

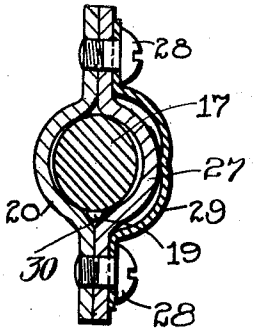

Fig.2.

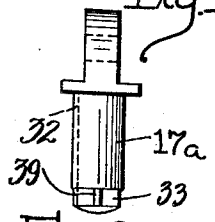

Fig.6.

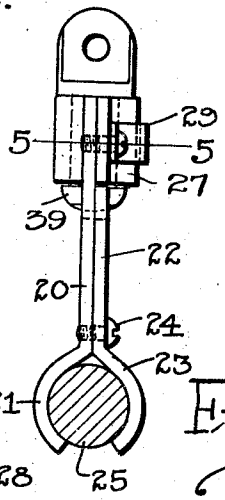

Fig.4.

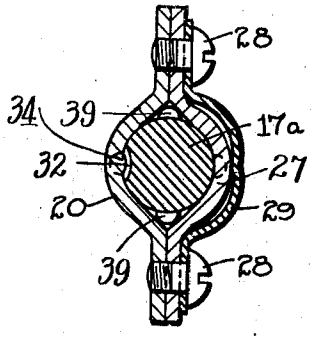

Fig.5.

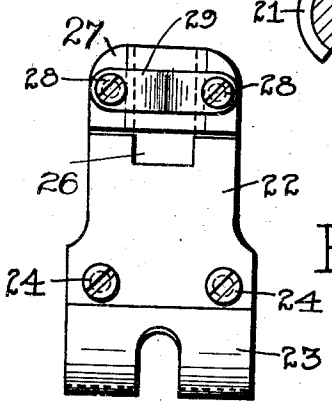

Fig.3.

Inventor:
J. C. Stearns
By Southgate & Southgate
Attorneys.

UNITED STATES PATENT OFFICE.

JASON C. STEARNS, OF WORCESTER, MASSACHUSETTS.

SPOTLIGHT SUPPORT.

1,424,687. Specification of Letters Patent. Patented Aug. 1, 1922.

Application filed May 31, 1921. Serial No. 473,763.

To all whom it may concern:

Be it known that I, JASON C. STEARNS, a citizen of the United States, residing at Worcester, in the county of Worcester and State of Massachusetts, have invented a new and useful Spotlight Support, of which the following is a specification.

This invention relates to a bracket and other supporting elements for a spotlight. The principal objects of the invention are to provide a simple and inexpensive device for carrying an adjustable spotlight and attaching it to the wind shield frame of the vehicle, preferably, and especially to provide an improved bracket and improved means by which the spotlight is detachably and yet firmly mounted on said bracket and connected therewith.

Further objects and advantages of the invention will appear hereinafter.

Reference is to be had to the accompanying drawings, in which—

Fig. 1 is a plan of one form of the invention showing it as supporting a spotlight of ordinary structure;

Fig. 2 is a sectional view on an enlarged scale on the line 2—2 of Fig. 1;

Fig. 3 is a front elevation of the bracket;

Fig. 4 is a plan on an enlarged scale of a modified form of bracket and supporting pin;

Fig. 5 is an enlarged sectional view of the same on the line 5—5 of Fig. 4, and

Fig. 6 is an elevation of the pivot pin therefor.

In the form shown in the first three figures, a spotlight 10 of ordinary construction, having an operating handle 11 is shown and, as usual, provided with a hub 12 which has means by which the lamp is pivoted on the vertical frame 25 of the wind shield. In the present case this hub has two ears 13 spaced apart for receiving a bolt or screw 14 through them. This bolt also passes through a flat end 16 of a pivot pin 17. Thus the lamp is pivotally mounted on the end of this pin to swing on a transverse axis, the pin being horizontal. On this pin there is a flat, circular collar 18 constituting a fixed portion of it. The pin itself is not circular in cross-section but, as indicated in Fig. 2, is of an oval form, wider in one direction than in the other. At the end it is provided with projections 19 extending radially.

This pin is supported by a bracket. The bracket comprises a plate 20 having at the end a pair of spaced claws or jaws 21. On this plate is mounted a clamping plate 22 having a corresponding pair of claws 23. Screws 24 are provided for attaching the two plates together and clamping the two sets of claws on a vertical rod 25 or the like on which the whole device is supported. The plate 22 is practically pivoted to the plate 20 on the screws 24 so that by tghtening them up the bracket becomes a fixed structure.

At the end of the bracket it is perforated at 26. This perforation extends through the end of the plate 22. The plate 20 is provided with a third plate 27 secured to it by screws 28 and having a flexible steel bar 29 under the heads of these two screws to prevent them from becoming loosened.

The end of the plate or bracket 20 and the plate 27 are bowed outwardly in opposite directions to provide a horizontal passage for the reception of the pin 17. This passage is substantially circular in cross-section in the form shown but on account of its being formed by pressing a piece of sheet metal it is provided at its opposite sides with two grooves 30 extending radially throughout the length of the passage for receiving the projections 19 when the lamp is turned to the right position. Only one of these grooves is necessary if only one projection 19 is used and I have shown one of them as formed too small to allow the projection to pass through it.

In this construction the screws 24 are tightened up to clamp the claws 21 and 23 against the opposite sides of the fixed rod 25. The lamp with the pin 17 projecting from it is usually used and the projection 19 can be inserted in its groove 30. Then the lamp is pushed in until the collar 18 rests on end of the bracket and the projection 19 is in the space 26. Then the lamp is turned quarter way around and the long dimension of the pin 17 just fits frictionally in the passage formed between the two plates 20 and 27. Thus the pin is held frictionally either in position exactly forward or backward or at any angle except a vertical position substantially at right angles thereto. The projections 19 furnish positive means for preventing the removal of the lamp. When it is to be removed it is turned to the position at right angles and it can then be drawn out without trouble.

In the form shown in Figs. 5 and 6 a circular pin 17^a is shown having a longitudinal

depression 32 throughout its length for receiving a wedge 34 on the bracket. The pin has a reduced end 33 which is widened out on the opposite sides to form two projections 39 having flat surfaces. This forms a convenient way of making these projections without changing the shape of the main portion and it can be made to fit frictionally in all positions.

It will be seen that in either form the lamp is not only capable of turning on a horizontal axis, but is also arranged to turn on a vertical axis and be held locked in position so that it cannot be drawn out of the bracket as long as it is being used for the ordinary purposes of a spotlight. The construction of the bracket and pin in either case is simple and inexpensive.

Although I have illustrated and described only two forms of the invention I am aware of the fact that other modifications can be made therein by any person skilled in the art without departing from the scope of the invention as set forth in the claims.

Therefore, I do not wish to be limited to all the details of construction herein shown and described but what I do claim is:—

1. In a spot light bracket, the combination with two sheet metal plates each having a pair of curved claws for clamping the bracket on a rod, of means arranged with their centers in a plane parallel to the axis of the rod for holding the plates and the claws together, one of said plates terminating short of the other at the other end, and a third plate removably attached to the longer plate beyond the shorter one, the third plate and the longer one having semicylindrical passages constituting means for pivotally supporting a spotlight on an axis transverse to the axis of said rod.

2. In a spotlight support, the combination of a bracket in two parts, each having a set of jaws, means for clamping said jaws on opposite sides of a supporting element to hold the bracket, said bracket having a passage therein of a general circular shape and a groove along one side thereof, and a pin fitting in said passage for supporting the spotlight, said pin having a radial projection at its end adapted to enter said groove and extend under the end of the part of the bracket in which said passage is located.

3. In a spotlight support, the combination of a bracket having a passage therein of a general circular shape and a groove along one side thereof, and a pin fitting in said passage for supporting the spotlight, said pin having a radial projection at its end adapted to enter said groove and extend under the end of the part of the bracket in which said passage is located, said pin and passage fitting each other frictionally when the lamp is turned to longitudinal position and loosely when the lamp is turned to a transverse position.

4. The combination with a spotlight, of a pin to the end of which the spotlight is pivoted, said pin having its front and rear surfaces formed on the arc of a circle and its side surfaces at a shorter distance apart and provided with a radial projection at its end, a bracket having a passage open at the end for said pin and having a groove along the passage for said projection which extends into the opening at the end of said passage, and means for clamping the bracket in fixed position.

5. The combination with a spotlight, of a pin through the end of which the spotlight is pivoted on an axis transverse to the axis of the pin, said pin being of an approximately round shape but having a longer diameter in one direction than in the transverse direction and provided with a radial projection at its extreme end, with a bracket having a passage as long as said pin back of said projection and open at the end to receive the pin and having a groove on it through which said projection is adapted to pass when the pin is inserted, whereby the projection will be received beyond the end of the passage and prevent the removal of the pin when the pin is turned after being inserted.

In testimony whereof I have hereunto affixed my signature.

JASON C. STEARNS.