Dec. 17, 1929. J. A. MARTOCELLO 1,739,978

OFF-CENTER BRACKET FOR ICE CANS

Filed July 29, 1926 3 Sheets-Sheet 1

Fig. 1.

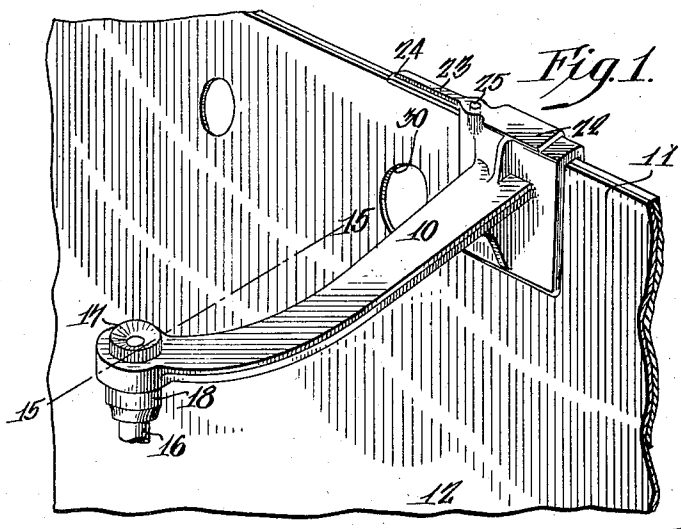

Fig. 7.

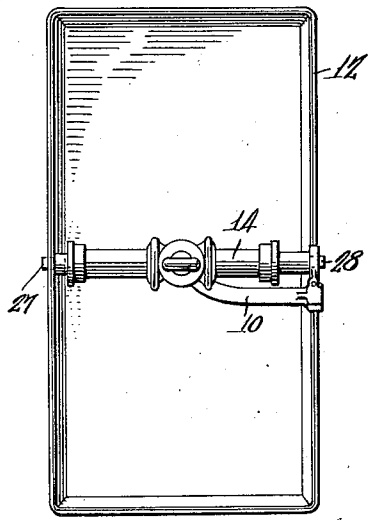

Fig. 8.

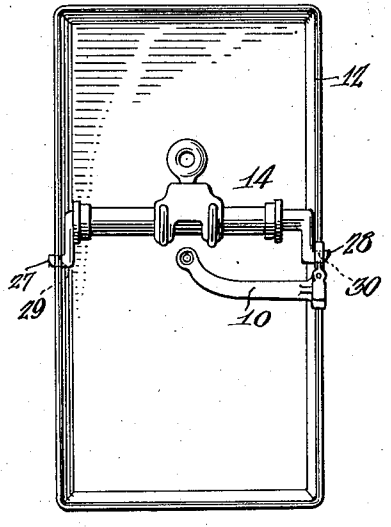

Fig. 5.

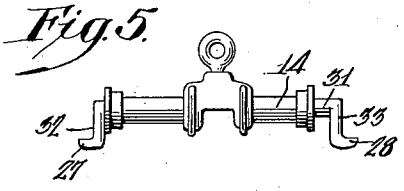

Fig. 6.

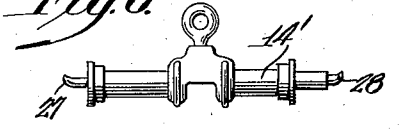

Inventor.
Joseph A. Martocello.
by
Attorney.

Dec. 17, 1929. J. A. MARTOCELLO 1,739,978

OFF-CENTER BRACKET FOR ICE CANS

Filed July 29, 1926 3 Sheets-Sheet 2

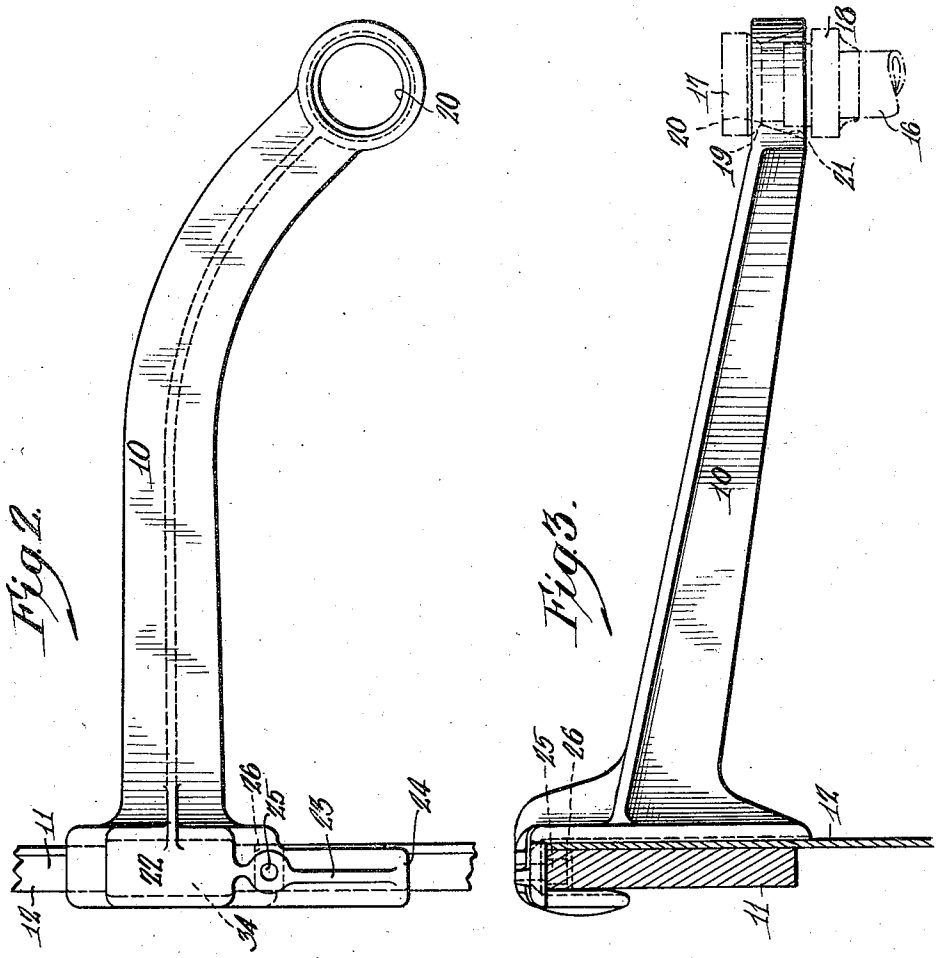

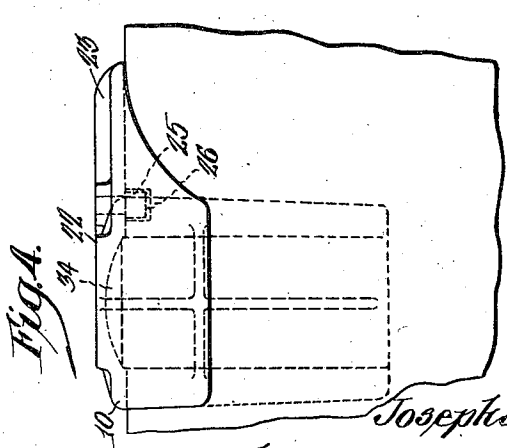

Inventor.
Joseph A. Martocello.

by

Wm. Steell Jackson.
Attorney.

Witness:
Walter Chism.

Dec. 17, 1929. J. A. MARTOCELLO 1,739,978

OFF-CENTER BRACKET FOR ICE CANS

Filed July 29, 1926 3 Sheets-Sheet 3

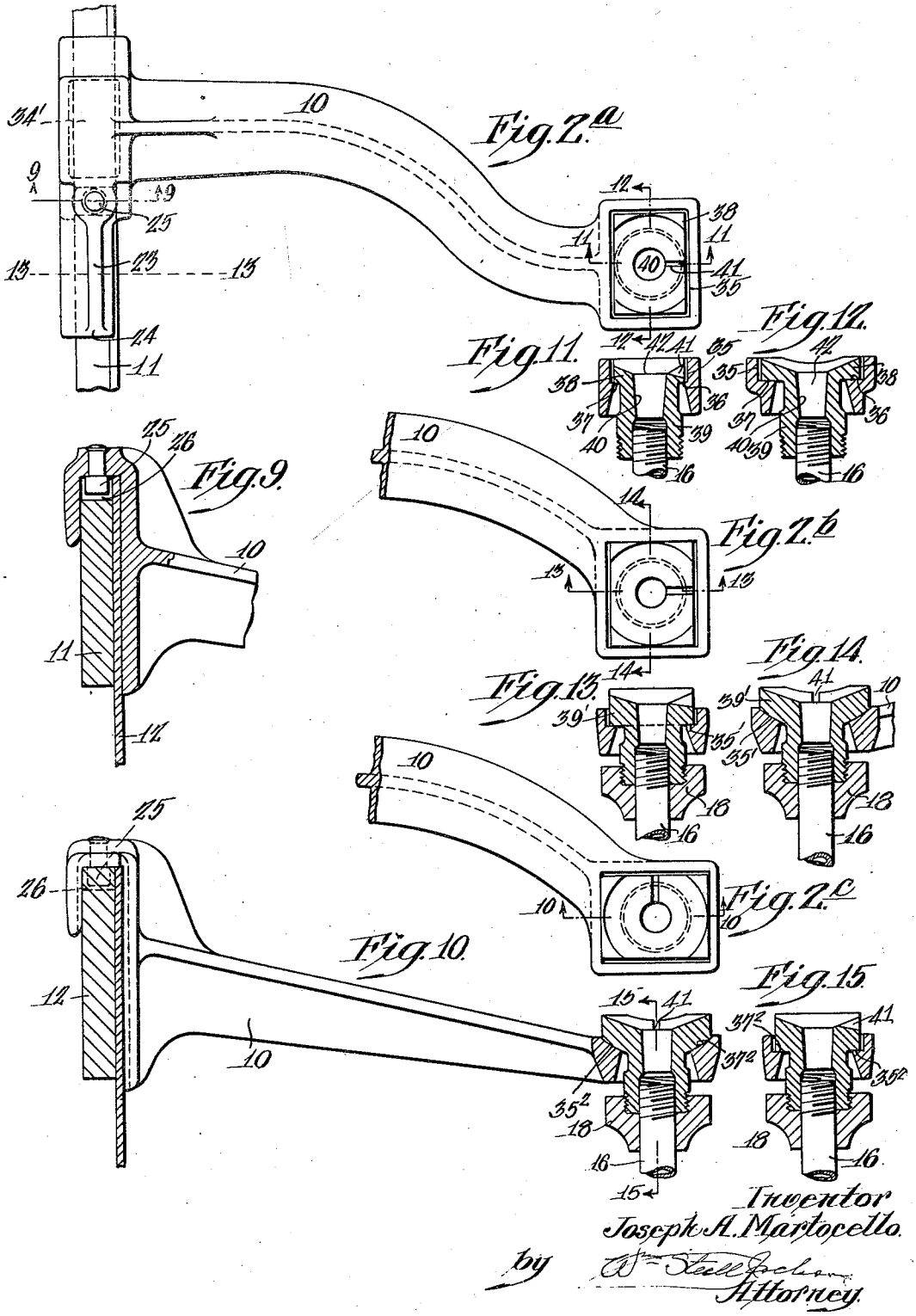

Patented Dec. 17, 1929 1,739,978

UNITED STATES PATENT OFFICE

JOSEPH A. MARTOCELLO, OF PHILADELPHIA, PENNSYLVANIA

OFF-CENTER BRACKET FOR ICE CANS

Application filed July 29, 1926. Serial No. 125,644.

My invention relates to a system and equipment for aerating raw water for ice making and while adapted to either a low or high pressure system should find its widest applications in low pressure systems.

A purpose of my invention is to transfer an ice can to the thawing tank before thawing loose the drop tube and to thaw loose the drop tube and remove the drop tube and its bracket from the can as a unit while thawing loose the can, preferably without unhooking the can dog from the ice can.

A further purpose is to provide a self-centering drop tube in the center of an ice can with bracket support that will not interfere with lifting out the can with a standard can dog while the bracket and drop tube are still in place.

A further purpose is to hook a tube bracket over the side of an ice can away from the middle of the side and to extend the bracket into the can along a path out of the way of a standard can dog to the central axis of the can, where it supports a drop tube that is preferably self-centering.

A further purpose is to support an offset hook side bracket from tilting under the weight of a drop tube in the middle of the can by a lateral extension from the bracket to the middle and top of the side of the can.

A further purpose is to afford pin and socket registry between an ice can and an offset side bracket for supporting a drop tube in the central axis of the can.

A further purpose is to provide a guided swinging motion for a drop tube about an axis well above the bracket.

Further purposes will appear in the specification and in the claims.

I have preferred to show only one main form of the different forms of my invention with however a minor modification and several forms of drop tube supports and have selected structure that is practical and efficient in operation and which illustrates particularly well the principles involved.

Figure 1 is a broken perspective showing my invention applied to an ice can.

Figure 2 is a top plan view of a portion of the structure shown in Figure 1.

Figures 2^a, 2^b and 2^c are fragments of Figure 2 but with different forms of connection between the drop tube and its bracket.

Figure 3 is a sectional side elevation of Figure 1.

Figure 4 is a rear end elevation of Figure 2.

Figures 5 and 6 are side elevations of different types of can dog adapted to use with my invention.

Figures 7 and 8 are top plan views of a can basket of the can dog of Figure 5 in different positions.

Figures 9 and 10 are cross sections similar to Figure 3 but taken at different lines, 9—9 and 10—10.

Figures 11 and 12 are cross sections of Figure 2^a taken upon the lines 11—11 and 12—12 respectively.

Figures 13 and 14 are cross sections of Figure 2^b taken upon lines 13—13 and 14—14 respectively.

Figure 15 is a section of Figure 10 taken upon line 15—15.

Like numerals refer to like parts in all figures.

Describing in illustration and not in limitation and referring to the drawings:—

In prior application I have disclosed a self-centering side bracket for supporting an air tube at the central axis of a can and it has hitherto been customary to remove the bracket and air tube from the ice can after the operation of freezing is complete before removing the can to the dip for thawing.

This has involved thawing loose the drop tube while the can is still in place in the freezing tank, after which the tube and bracket have been lifted away to permit insertion of a can dog by which the can is lifted out and transferred to the thawing or dip tank.

At the thawing tank the can is dipped into warm water to loosen it from the ice and it must remain here submerged for some little time for satisfactory loosening.

This period of submergence is one of mere waiting by the operator and one of the chief aims of my present invention is to utilize this period of mere waiting (now wasted) for thawing loose the drop tube and then lift-

ing it away with its bracket, and I provide advantageous and novel bracket structure adapted to this improvement of process.

The former brackets for supporting the drop tube at the axis of the can have been not adapted to this advantageous change in the process, because they have been in the way of putting in a standard can dog so that the bracket and tube have had to be removed before lifting out the can and my invention broadly covers the change in system as well as the structure that permits the change.

As illustrated in the figures, the bracket 10 hooks over the side 11 of the can 12 at some distance from the middle line 13—13 of the side 11 and then extends into the can diagonally downward preferably perpendicular to the side 11 and when sufficiently far down to avoid an inserted can dog 14, 14′ curves inwardly to the central axis 15—15 of the can.

The drop tube 16 shown is preferably of the self-centering type in order that the tube may hang vertical irrespective of any variation in the angle of the bracket.

The drop tube is loosely supported in the central axis of the can by ball and socket connection with the end of the bracket, a downwardly rounded ferrule 17 screwed to the upper end of the tube and locked in place in the perforation of the bracket by a lock collar 18 below the bracket forming the ball which seats upon an upwardly directed spherical or conical wall or socket 19 about a perforation 20 through the end of the bracket.

To permit a small universal lateral play of the tube the lower side of the perforation is shown downwardly flaring at 21. The hook portion 22 of the bracket is offset some distance from the middle line 13—13 of the side of the can and I extend a supporting rib 23 from the offset hook along the top of the side of the can past the middle line 13—13 to prevent tilting of the bracket under the weight of the drop tube.

This supporting rib should preferably extend some distance past the middle of the side and far enough in any event to avoid any danger of the bracket tilting about the end 24 of this rib under the weight of the drop tube. The rib engages the top of the side of the can to prevent this tilting of the bracket.

In order to make it easy for an operator to properly place the bracket so that the drop tube will register approximately with the central axis of the can I provide a downwardly extending dowel pin 25 located in the bracket to register with a corresponding socket 26 in the top of each can.

When putting the bracket and drop tube in place the hook is put over the side of the can and slid along until the dowel pin enters its socket and the bracket is then properly placed so that the drop tube hangs vertical in the central axis of the can.

In accord with my present invention when the water in the can has been frozen I insert the ends 27 and 28 of the dog 14 into the lifting holes 29 and 30 located in the middle of opposite sides of the can, lift out the can and transfer it to the thawing tank where I dip the can for thawing and during dipping, with the can dog preferably still in place, thaw loose the drop tube by means of any usual or suitable thaw needle and then lift away the bracket and drop tube as a unit, transferring the can to the dump.

In Figures 5 and 6 I show two types of can dog, either of which may be used, but of which the form shown in Figure 5 is preferable in that it is readily turned to one side at the thawing tank to permit insertion of a thaw needle into the drop tube.

If the form of dog shown in Figure 6 is used it will usually be preferable to remove the dog before inserting the thawing needle as the straight portion of the dog is directly over the drop tube.

The form of dog shown in Figure 5 has a raised cross bar 31 with downwardly directed arms 32 and 33 one of which 33 is sprung back when the dog ends are inserted in the holes of the can.

The dogs are already well known articles of commerce and in themselves are not claimed as my invention.

In order to reduce the upsetting effect upon the bracket of roughness or foreign matter upon the edge and surface of the can and to seat the bracket firmly upon the can I cut away the middle portion of the bracket both at the top and sides as at 34, 34′.

The offset bracket support is intended to cooperate with a tube having freedom of movement with respect to the bracket but the exact nature of this movement does not affect the broader features of my invention. I show several different constructions. A form having a universal joint through ball and socket connection has already been described in connection with Figures 2 and 3.

In all of the other forms the rotative position of the tube in the can is set by making the connections between the seat and tube fitting rectangular, giving a definite predetermined direction to the air discharged into the can. This is done more or less at the expense of freedom of swinging movement.

In the various rectangular seat forms shown the tubes are so supported as to swing so far as swinging is intended, within planes parallel with the sides of the can, lengthwise or crosswise of the can or both.

In Figures 2ª, 11 and 12, a rectangular socket 35 is formed in the end of the bracket. The flat bottom 36 of the socket affords a seat for the flat under side 37 of a rectangular flange 38 upon the fitting 39 into which the drop tube is secured. In this form the tube does not have free sliding movement in any direction and will not swing except as it may

rock either longitudinally of the can or transversely of the can. In this figure the concave guide 40 for a thawing needle is shown, as also the drainage slot 41 and the usual nozzle opening 42. The locking nut 18 has been omitted. In some cases its locking function is not needed.

In the form shown in Figure 2^b, 13 and 14 the upper face of the bracket about the aperture forms a seat 35′ rather than a socket. The seat is straight in sections across the can but is curved and is preferably concaved and circular in sections parallel to the length of the can. This is best seen in Figure 14. The fitting 39′ rests upon the seat and rolls or slides upon it if its cylindrical under surface fit the seat closely or rocks upon it if the fitting be of sufficiently smaller convexity than the concavity of the seat. The movements of the tubes in planes parallel with the length of the can are thus facilitated. The nut 18 is shown here.

In the form shown in Figures 2^c, 10 and 15 the same construction is found as in Figures 2^b, 13 and 14 except that the curved seat 35^2 and the curved under surface 37^2 of the fitting are here transverse to the can and the straight cross section is parallel with the length of the can, reversing conditions in Figures 2^a, 11 and 12 and facilitating swinging movement across the can. The nut 18 is in position here.

The forms which have only partial swinging tube movement restricted in a plane or planes or which do not move freely have an advantage with some customers in that where the can slopes the tube will assume a position intermediate between the true vertical position and the vertical axis of the can.

Some of the advantages of my invention are in the saving of time and resultant increase of plant capacity incident to thawing loose the drop tube and removing the drop tube and its bracket during a period of waiting for thawing loose the can in the thawing tank. There are further advantages in the elimination of wet and slop over the freezing floor always present if the tubes are thawed loose in place upon the freezing floor, and in the lower cost of installation from centralizing the work of thawing and removal of the drop tube and its bracket.

Instead of having to thaw the drop tubes at the cans all over the freezing floor, slopping up the floor at each can, I thaw them at one place, keeping the freezing floor dry, require much less piping for supplying the thawing water, and by the greater convenience and saving of time increase the output of the floor.

In view of my invention and disclosure variations and modifications to meet individual whim or particular need and to obtain part or all of the benefit of my invention without copying the structure of the drawing will doubtless become evident to others skilled in the art and I therefore claim all such in so far as they fall within the reasonable spirit and scope of my invention.

Having thus described my invention what I claim as new and desire to secure by Letters Patent is:—

1. In a can and a tube bracket for supporting a drop tube in the middle of an ice can, an ice can, a bracket spaced at its can support at a distance from the axis of the can, and reaching over the side of the can and laterally extended to engage the top and beyond the middle of the side to support the bracket from tilting under the weight of the tube at the middle of the can.

2. A can and a tube bracket for supporting a drop tube in the center of a can comprising an ice can, a tube-supporting member at the center of the can, an off-center intermediate portion extending over to the side wall of the can at a distance from the axis of the can and a can-engaging terminal adapted to rest upon the top of the can at a distance from the axis and extending along the top of the can beyond the axis of the can to support the bracket against tilting under the weight of the tube.

3. An ice can having lifting holes in opposite sides near the top thereof, a lifting dog having ends engaging the respective holes, a drop tube at the middle of the can, a hook over one of the sides of the can at an off-center point, a bracket integral with the hook clearing the dog and supporting the tube, and a rib from the hook along the top of the side, engaging the top of the side on the other side of the can wall center from the hook and extending over one end of the dog.

4. An ice can having lifting holes in opposite sides near the top thereof, a lifting dog having ends engaging the respective holes, a drop tube at the middle of the can, a hook over one of the sides at an off-center point spaced from the dog, a bracket integral with the hook clearing the dog and supporting the tube, a rib from the hook along the top of the side engaging it mainly beyond the center of the side and extending over one of the holes and a pin and socket connection between the top of the can and the hook for registering the tube with respect to the can.

5. An ice can having lifting holes in opposite ends near the top thereof, a lifting dog having ends engaging the respective holes, upwardly extending arms and a cross bar between the arms and raised above the ends, a drop tube at the middle of the can, a hook over one of the sides at an off-center point spaced from the dog, a bracket integral with the hook clearing the dog and supporting the tube, and an extension from the hook engaging the top and middle of the side above one of the holes and extending beyond the middle from the position of the off-center hook.

6. An ice can, an air tube, an apertured bracket adapted to support the tube in the middle of the can and a head-and-socket loose connection between the tube and its bracket having substantially straight contact section in one plane and curved contact section in a plane at right angles thereto, causing tilting engagement in one direction of swinging and sliding contact engagement at right angles to this direction.

7. An ice can, an air tube having air outlets along opposite sides, a bracket adapted to support the tube in the middle of the can and hooking over the side of the can, and a non-circular head-and-socket loose connection between the tube and bracket determining the direction of air discharge from the tube, swinging about an axis within the axis of the tube in one plane of swinging movement and about an axis outside of the axis of the tube in another plane of swinging movement.

8. In a drop tube construction for ice cans, a bracket adapted to support the drop tube from the walls of the can, and presenting an aperture and a rectangular seat about the aperture curved in one plane in combination with a drop tube and a terminal upon the drop tube fitting the recess adapted to rock upon the floor in one direction to permit swinging of the tube.

9. In an ice can construction, a bracket adapted to rest upon the edge of the can and extending in a direction across the can, presenting an aperture and a seat about the aperture curved in sections in one direction and straight in sections at right angles thereto in combination with a drop tube and a fitting upon the tube adapted to swing upon the curved contour of the seat.

10. In an ice can construction, an off-center bracket having the body of the bracket spaced from the transverse axis of the can and a drop tube terminal within the approximate center of the can and a supporting bracket terminal resting upon the edge of the can at a distance from the center of the edge and also resting on the edge beyond the center in the opposite direction to prevent tilting of the bracket.

11. In an ice can construction, an off-center bracket having a terminal adapted to lie in the middle of the can, a bracket body at a distance from the lateral axis of the can and a supporting member resting upon the top of a long side of a can on one side of the center and extending beyond the center of the can to prevent upsetting, in combination with a lifting dog adapted to engage with the sides of the can for lifting it and to continue to be connected with the can while spaced at the center of the can from the terminal to permit access to the terminal at the top thereof.

12. In ice can construction, an ice can having dog openings on opposite sides, a swinging dog therein, in one position off-center with respect to the lateral axis of the can, in combination with a bracket terminal adapted to lie in the center of the can, an arm off-set throughout the greater part of its length away from lateral axis of the can and an off-center support for the bracket engaging the can edge and extending from the off-center support beyond the center of the can edge.

JOSEPH A. MARTOCELLO.