PCT WORLD INTELLECTUAL PROPERTY ORGANIZATION
International Bureau

INTERNATIONAL APPLICATION PUBLISHED UNDER THE PATENT COOPERATION TREATY (PCT)

(51) International Patent Classification 6 : G11B 20/00, H04N 5/913, 7/50 — A1

(11) International Publication Number: **WO 97/13248**

(43) International Publication Date: 10 April 1997 (10.04.97)

(21) International Application Number: PCT/IB96/00992

(22) International Filing Date: 25 September 1996 (25.09.96)

(30) Priority Data:
95202673.0 4 October 1995 (04.10.95) EP
(34) Countries for which the regional or international application was filed: AT et al.

(71) Applicant: PHILIPS ELECTRONICS N.V. [NL/NL]; Groenewoudseweg 1, NL-5621 BA Eindhoven (NL).

(71) Applicant *(for SE only)*: PHILIPS NORDEN AB [SE/SE]; Kottbygatan 7, Kista, S-164 85 Stockholm (SE).

(72) Inventor: LINNARTZ, John, Paul, Marie, Gerard; Prof. Holstlaan 6, NL-5656 AA Eindhoven (NL).

(74) Agent: SCHMITZ, Herman, J., R.; Internationaal Octrooibureau B.V., P.O. Box 220, NL-5600 AE Eindhoven (NL).

(81) Designated States: CN, JP, KR, European patent (AT, BE, CH, DE, DK, ES, FI, FR, GB, GR, IE, IT, LU, MC, NL, PT, SE).

Published
With international search report.
Before the expiration of the time limit for amending the claims and to be republished in the event of the receipt of amendments.

(54) Title: MARKING A DIGITALLY ENCODED VIDEO AND/OR AUDIO SIGNAL

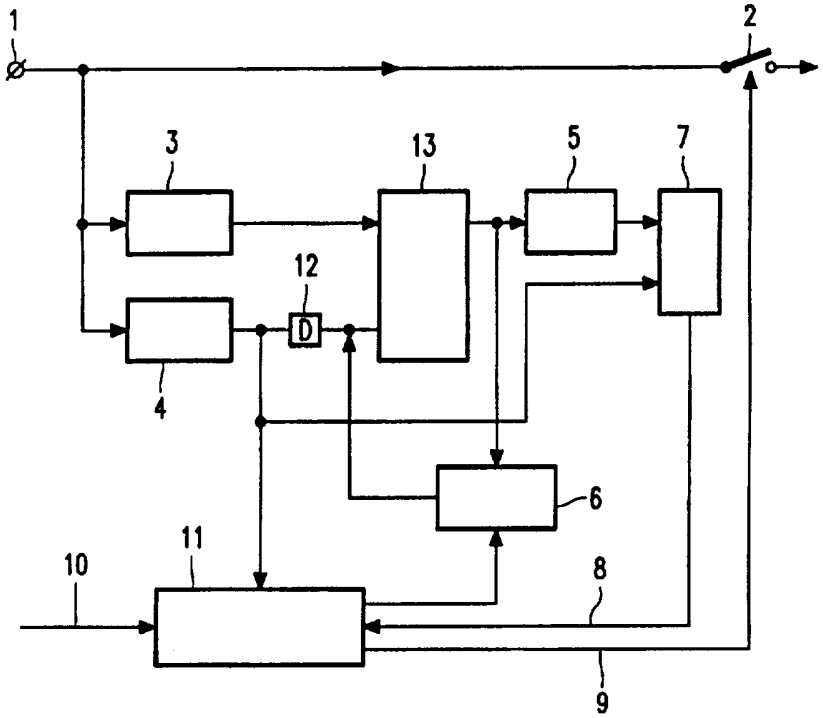

(57) Abstract

An electronic watermarking scheme is proposed that can significantly increase the security of copy protection mechanisms. The watermarking methods works at high level in the hierarchy of the (MPEG) source signal. This ensures that the watermark is easily detectable, but difficult to erase without significant transcoding effort. Such transcoding is considered a difficult and expensive task that may furthermore lead to loss of quality or increase in bit rate.

FOR THE PURPOSES OF INFORMATION ONLY

Codes used to identify States party to the PCT on the front pages of pamphlets publishing international applications under the PCT.

AM	Armenia	**GB**	United Kingdom	**MW**	Malawi
AT	Austria	**GE**	Georgia	**MX**	Mexico
AU	Australia	**GN**	Guinea	**NE**	Niger
BB	Barbados	**GR**	Greece	**NL**	Netherlands
BE	Belgium	**HU**	Hungary	**NO**	Norway
BF	Burkina Faso	**IE**	Ireland	**NZ**	New Zealand
BG	Bulgaria	**IT**	Italy	**PL**	Poland
BJ	Benin	**JP**	Japan	**PT**	Portugal
BR	Brazil	**KE**	Kenya	**RO**	Romania
BY	Belarus	**KG**	Kyrgystan	**RU**	Russian Federation
CA	Canada	**KP**	Democratic People's Republic of Korea	**SD**	Sudan
CF	Central African Republic			**SE**	Sweden
CG	Congo	**KR**	Republic of Korea	**SG**	Singapore
CH	Switzerland	**KZ**	Kazakhstan	**SI**	Slovenia
CI	Côte d'Ivoire	**LI**	Liechtenstein	**SK**	Slovakia
CM	Cameroon	**LK**	Sri Lanka	**SN**	Senegal
CN	China	**LR**	Liberia	**SZ**	Swaziland
CS	Czechoslovakia	**LT**	Lithuania	**TD**	Chad
CZ	Czech Republic	**LU**	Luxembourg	**TG**	Togo
DE	Germany	**LV**	Latvia	**TJ**	Tajikistan
DK	Denmark	**MC**	Monaco	**TT**	Trinidad and Tobago
EE	Estonia	**MD**	Republic of Moldova	**UA**	Ukraine
ES	Spain	**MG**	Madagascar	**UG**	Uganda
FI	Finland	**ML**	Mali	**US**	United States of America
FR	France	**MN**	Mongolia	**UZ**	Uzbekistan
GA	Gabon	**MR**	Mauritania	**VN**	Viet Nam

Marking a digitally encoded video and/or audio signal.

The invention relates to a method and arrangement for marking a digitally encoded video and/or audio signal so as to classify said signal as authentic programme material. The invention also relates to an arrangement for decoding said marked signal and a recording medium on which said marked signal has been recorded.

Video and audio signals are increasingly transmitted and recorded in a digitally encoded form, for example, an MPEG bitstream. There is a growing need to accommodate a marker in said signal so as to classify the signal as authentic programme material. Marking digital signals is particularly useful in copy protection applications. The mark, also referred to as watermark, can effectively take the form of a single bit indicating that the signal constitutes copy protected material, or a multi bit code representing the originator of the material. Watermarking is comparable to placing an electronic stamp on the video and audio material.

In the known MPEG standard for audio and video compression a copy protection bit has been defined for that purpose. However, a disadvantage of this known method is that the protection bit can easily be detected and then modified so as to circumvent a copyright protection mechanism.

It is an object of the invention to provide a method which renders it possible to easily detect a watermark but difficult to erase it.

According to the invention, the method is characterized by the step of assigning a predetermined value to a predetermined coding parameter which, when modified, requires a plurality of further parameters to be modified in order to correctly decode said video signal.

The invention is based on the insight that a compressed audio or video signal (e.g. an MPEG bitstream) comprises a plurality of coding parameters. The value of

many coding parameters can easily be detected without decoding the bitstream. However, the modification of some parameters generally leads to a bitstream which no longer fulfils the prescribed format (e.g. the MPEG syntax), or leads to errors in the decoding process. Thus, a watermark which has been obtained by assigning a predetermined value to such a coding parameter can easily be detected by not modified, i.e. erased. Modification of the watermark requires the signal to be first decoded into the pixel domain and then re-encoded into a new bitstream. This operation leads to loss of quality, unless expensive encoding equipment is used.

In an embodiment of the invention, the predetermined coding parameter is the number of slices in selected MPEG encoded video frames. Selected frames may include all frames or frames of a certain type (I,P,B) only. Selected frames may also means the first I-frame of a GOP.

Usually, the number of slices in a video frame varies with the video contents. According to the invention, the number of slices is controlled in advance. The watermark is thus generated by forcing the encoder to generate a predetermined number of slices. The number of slices is not necessarily fixed. The number of slices may also forced to be an integral multiple of an integer N. In a preferred embodiment of the invention, the number of slices is forced to be an integral multiple of N and an integral multiple of M in alternating selected frames. The probability that a "normal" encoder will produce such a number of slices is extremely small, even if the input signal is stationary.

Further examples of suitable coding parameters are quantization matrix settings, the PES packet length of an MPEG bitstream, or the sequence of intraframe (I), predictively encoded (P) and bidirectionally encoded (B) frames in an MPEG signal.

Fig.1 shows an encoder according to the invention.

Fig.2 shows a decoder according to the invention.

Fig.3 shows a timing diagram to illustrate the operation of the method according to the invention.

Fig.4 shows an embodiment of a disc-player comprising the decoder shown in Fig.2.

Fig.1 shows an encoder according to the invention. Reference numeral **101** denotes circuitry for encoding a video sequence up to the level of slices, reference numeral **102** denotes a slice encoder, and reference numeral **103** denotes circuitry for encoding picture data within a slice. Reference numeral **104** denotes a circuit for determining slice boundaries. The circuits **100-104** are part of a conventional MPEG encoder and need no further explanation. In the conventional MPEG encoder, the slice boundaries are determined by the video source material and directly applied to an input **105** of slice encoder **102**. The bitstream produced by the encoder comprises a frame start header F at the beginning of each frame and a slice start code S at the beginning of each slice.

In the encoder shown in Fig.1, the slice boundaries are modified by a slice boundary modifying circuit **106**. The slice boundaries are now selected in response to a signal which is generated by a sequence generator **107.** This signal determines the number of slices in each frame. In the present embodiment, the sequence generator alternately produces an integer n and an integer m in such a way that n mod N = 0 and m mod M = 0. N and M can be 3 and 7, respectively. Accordingly, the number of slices is forced to be an integer multiple of 3 and 7 in alternate frames. This particular pattern represents a watermark. It is very unlikely that a conventional MPEG encoder produces a bitstream having said number of slices per frame. In addition hereto, the encoder can also adapt the quantization scale values more frequently than needed for the particular source material. This makes it more difficult for a hacker to modify the number of slices.

Fig.2 shows a decoder according to the invention. An MPEG bitstream at input **1** is transferred to the output whenever switch **2** is closed. Switch **2** is controlled by a block signal **9**. A slice detector circuit **3** detects the presence of a slice start code S in the MPEG bitstream. Similarly, a frame detector circuit **4** detects the presence of a frame start header F. A counter **13** counts the number of slices in each frame. The counter is reset at the start of a new frame via a delay **12**. A comparator **6** resets the counter **13** if the output equals a modulus value which is applied by a control circuit **11**. In view of the description of the encoder it will be appreciated that the modulus value is N and M for alternate frames. Hence, counter **13** alternately behaves as a mod N and a mod M counter. A further comparator **5** outputs a one if its input is zero. An AND gate **7** generates a pulse signal **8** if the counter state is zero when a new frame starts. Delay **12** ensures that the zero detection is performed before the counter **13** is reset by the frame start header. Control circuit **11** checks

whether, over a period of a certain number of frames, the number of slices per frame mod N behaves according to the rules that are specific for a copy marked image.

If the bitstream is copy protected, control circuit **11** checks whether also an authenticate signal **10** is present. If the signal is copy protected, but no authenticate signal is present, the MPEG signal is an illegal copy. In such case, control circuit **11** opens switch **2** and the MPEG signal is not transferred to the output. In case that a genuine original copy-protected MPEG bitstream is accompanied by a valid authenticate signal **10**, the switch **2** is closed and the bitstream will be decoded. Home-recorded material that is not copy protected will be detected as such, and the switch will be closed.

The consequences of removing a slice header are that the q-scale parameters must be adapted and the Macro-Block addresses must included. Such changes in the MPEG stream will in the long-run result in incorrect buffer contents. To ensure proper operation, further modifications are needed.

Fig.3 diagrammatically shows the probability P that a disk is an illegal copy given the observed MPEG bitstream. Playback of the disk starts at $t=t_a$, the first PES header arrives at $t=t_0$. If a hacker or pirate does not remove or modify the conventional copy bit, a fraudulent disk is recognised immediately when the basic engine receives the next PES header (curve a). If the bit is modified but the hash function is not removed, the fake is discovered with certainty a little later (curve b). If a more sophisticated hacker removes the hash check, but not the watermark, it can be decided at $t=t_b$ that the copy is fake with probability 1-e (curve c). If the hacker also manages to corrupt a portion of the watermark (at $t=t_c$) or if the content provider included incorrect watermarks (e.g. if audio bytes simulate F or S sequences), the illegal copy is recognized later. Typically, e will be chosen very small to avoid that home videos accidentally simulate a copy protection watermark (false alarm). The discovery time t_d-t_0 is to be designed sufficiently small, without compromising the probability that an MPEG sequences generated by a random coder and randomly chosen content simulates the watermark.

In another embodiment of the invention, the watermark consists of specific values chosen in the Quantization Matrix. The quantization matrix can be evaluated simply by checking for an MPEG sequence header. The matrix, if present, is found after skipping 62 bits. A specific bit after the header byte indicates whether the matrix is present or not. In the latter case, default values are considered.

Watermarks can also be embedded in audio signals. For each frame of audio (24 msec), 4 quantization bits are specified for each subband (maximum of 32 subbands).

An application of copy protection of storage media, for example Multi-Media CDs, will now be described. The proposed copy protection scheme uses a combination of a medium marker (wobble key) that indicates whether the disk is recordable or a read-only professionally mastered MM-CD, and a content marker that indicates whether the content is copy protected. The content marker is a set of marks, comprising a copy bit, a hash function over other data plus the copy bit, and a watermark as described herein before. If the hash function is present (which may be not the case in home videos), the CD player/recorder checks whether the hash function matches the content with the copy bit being set to "protected". The hash function and watermark are included to make erasure of the copy bit technically more difficult. The hash function can be omitted from the bitstream but that requires at least remultiplexing and redefinition of PES lengths. Erasing the watermark requires at least partial transcoding of the MPEG audio or video content.

With reference to Fig.4, a watermark detection circuit **41** searches for a watermark embedded in the bitstream which is read from CD **42**. A wobble key detection circuit **43** verifies the presence of a wobble key. The circuit **43** may be included in the control loop of the CD drive, or measure the reflectivity of the disc. A verification circuit **44** performs a simple boolean operation which is given in the following Table. If either a watermark is present with correct wobble groove keys, or no watermark is present, then MPEG bitstream is applied to a demultiplexer **46** and MPEG decoder **47** by closing a switch **45**. If the watermark is present, but no corresponding wobble is present, the CD reader blocks the content, by opening the switch **45**.

		Wobble key indicative for:	
		Digital Video Disk	Recordable Disk
Copy bit, or Hash, or Watermark	present and OK	pass signal	block signal
	absent or false	pass signal	pass signal

In summary, an electronic watermarking scheme is proposed that can significantly increase the security of copy protection mechanisms. The watermarking methods works at high level in the hierarchy of the (MPEG) source signal. This ensures that the watermark is easily detectable, but difficult to erase without significant transcoding effort. Such transcoding is considered a difficult and expensive task that may furthermore lead to loss of quality or increase in bit rate.

Claims

1. A method of marking a digitally encoded video and/or audio signal so as to classify said signal as authentic programme material, characterised by the step of assigning a predetermined value to a predetermined encoding parameter which, when modified, requires a plurality of further parameters to be modified in order to correctly decode said video signal.

2. The method as claimed in Claim 1, wherein the digitally encoded signal is an MPEG signal and wherein the predetermined coding parameter is the number of slices in selected encoded video frames.

3. The method as claimed in Claim 2, wherein successive selected frames alternately comprise a modulo-N and a modulo-M number of slices in which N and M are integers.

4. A method of decoding a digitally encoded video and/or audio signal comprising a marker classifying said signal as authentic programme material, characterised by the step of detecting the value of a predetermined encoding parameter which, when modified, requires a plurality of further parameters to be modified in order to correctly decode said video signal, and the step of refraining from decoding the signal if said encoding parameter has a value different from a predetermined value.

5. The method as claimed in Claim 4, wherein the digitally encoded signal is an MPEG signal, and wherein said detecting step comprises the step of detecting whether the number of slices in selected encoded video frames is a predetermined number.

6. The method as claimed in Claim 5, wherein said detecting step comprises the step of detecting whether successive selected frames alternately comprise a modulo-N and a modulo-M number of slices in which N and M are integers.

7. An encoder for carrying out the method according to any of claims 1-3.

8. A decoder for carrying out the method according to any of claims 4-6.

9. A recording medium having stored thereon a digitally encoded video and/or audio signal having been marked so as to classify said signal as authentic programme material, characterised the signal has been marked by a predetermined value assigned to a

predetermined encoding parameter which, when modified, requires a plurality of further parameters to be modified in order to correctly decode said video signal.

10. The medium as claimed in Claim 9, wherein the digitally encoded signal is an MPEG signal and wherein the predetermined coding parameter is the number of slices in selected encoded video frames.

11. The medium as claimed in Claim 10, wherein successive selected frames alternately comprise a modulo-N and a modulo-M number of slices in which N and M are integers.

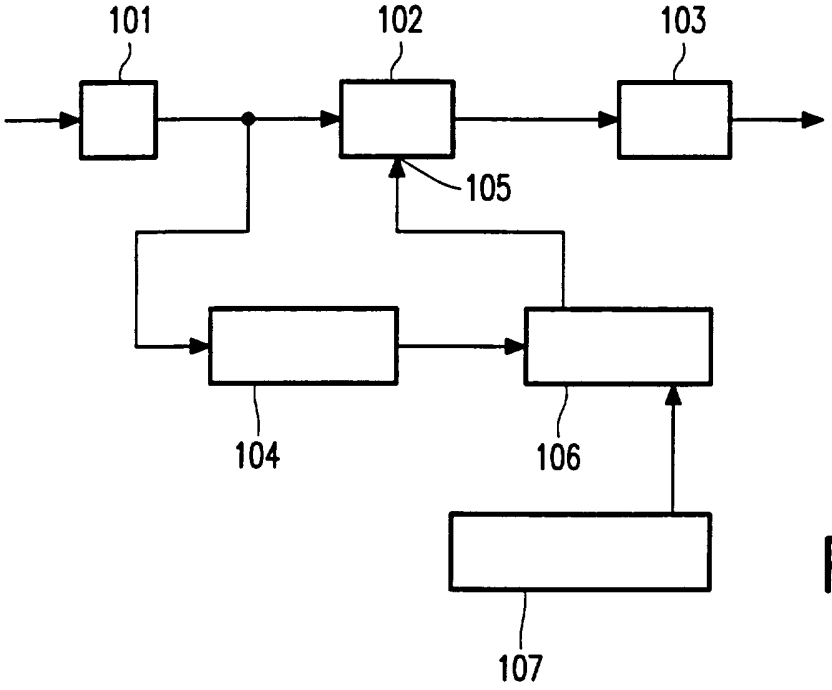

FIG. 1

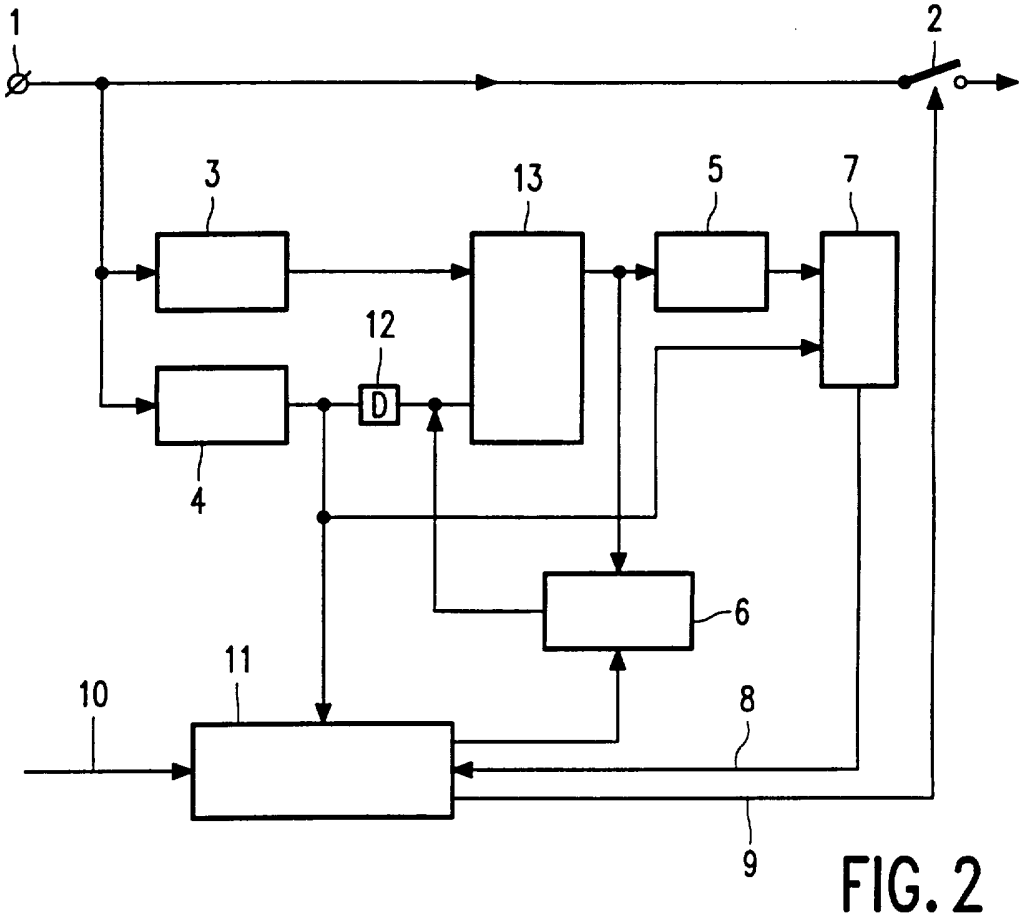

FIG. 2

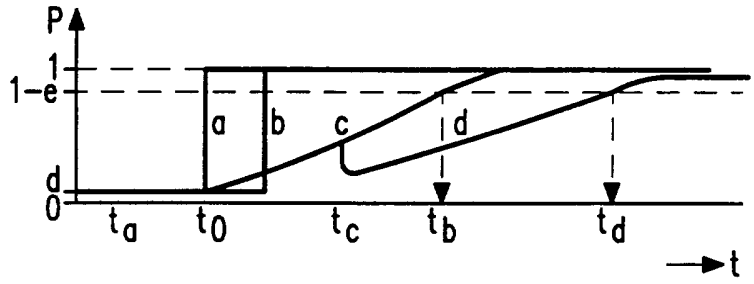

FIG. 3

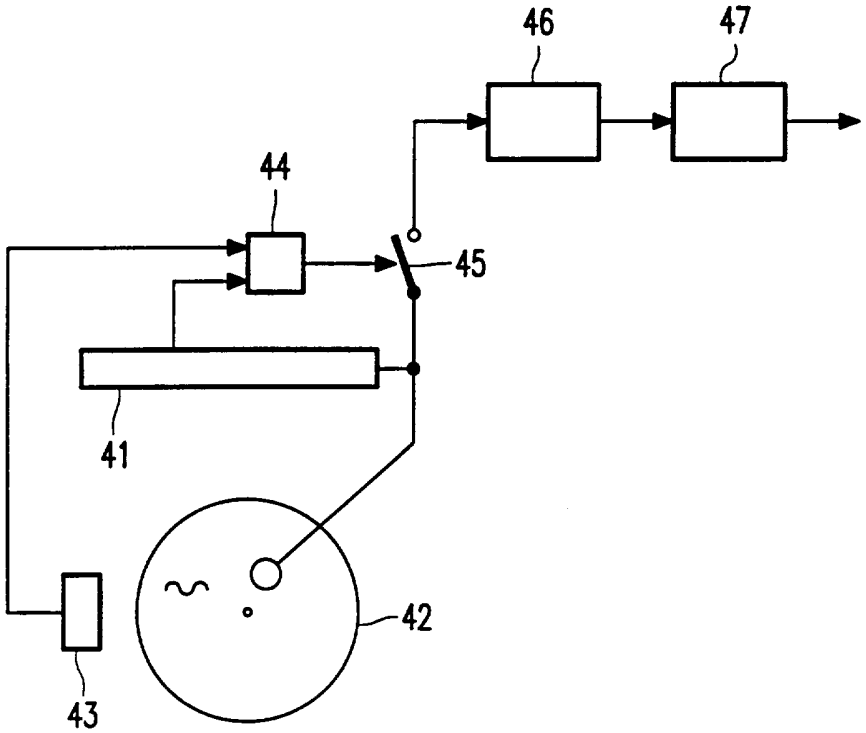

FIG. 4

INTERNATIONAL SEARCH REPORT

International application No.
PCT/IB 96/00992

A. CLASSIFICATION OF SUBJECT MATTER

IPC6: G11B 20/00, H04N 5/913, H04N 7/50
According to International Patent Classification (IPC) or to both national classification and IPC

B. FIELDS SEARCHED

Minimum documentation searched (classification system followed by classification symbols)

IPC6: G11B, H04N

Documentation searched other than minimum documentation to the extent that such documents are included in the fields searched

SE,DK,FI,NO classes as above

Electronic data base consulted during the international search (name of data base and, where practicable, search terms used)

C. DOCUMENTS CONSIDERED TO BE RELEVANT

Category*	Citation of document, with indication, where appropriate, of the relevant passages	Relevant to claim No.
A	EP 0675647 A1 (SONY CORPORATION), 4 October 1995 (04.10.95), column 2, line 35 - column 3, line 21, claims 1,2,3, abstract --	1-11
A	EP 0581227 A2 (HITACHI, LTD.), 2 February 1994 (02.02.94), column 2, line 51 - column 3, line 33 --	1,2,4,5,7-10
P,A	WO 9603835 A2 (MACROVISION CORPORATION), 8 February 1996 (08.02.96), page 7, line 10 - page 10, line 11 -- --------	1-11

☐ Further documents are listed in the continuation of Box C. ☒ See patent family annex.

* Special categories of cited documents:
"A" document defining the general state of the art which is not considered to be of particular relevance
"E" erlier document but published on or after the international filing date
"L" document which may throw doubts on priority claim(s) or which is cited to establish the publication date of another citation or other special reason (as specified)
"O" document referring to an oral disclosure, use, exhibition or other means
"P" document published prior to the international filing date but later than the priority date claimed
"T" later document published after the international filing date or priority date and not in conflict with the application but cited to understand the principle or theory underlying the invention
"X" document of particular relevance: the claimed invention cannot be considered novel or cannot be considered to involve an inventive step when the document is taken alone
"Y" document of particular relevance: the claimed invention cannot be considered to involve an inventive step when the document is combined with one or more other such documents, such combination being obvious to a person skilled in the art
"&" document member of the same patent family

Date of the actual completion of the international search	Date of mailing of the international search report
25 February 1997	26 -02- 1997
Name and mailing address of the ISA/ Swedish Patent Office Box 5055, S-102 42 STOCKHOLM Facsimile No. +46 8 666 02 86	Authorized officer Christian Rasch Telephone No. +46 8 782 25 00

INTERNATIONAL SEARCH REPORT

Information on patent family members

International application No.
PCT/IB 96/00992

Patent document cited in search report	Publication date	Patent family member(s)	Publication date
EP-A1- 0675647	04/10/95	CA-A- 2145578	30/09/95
		CN-A- 1125886	03/07/96
		JP-A- 7274115	20/10/95
EP-A2- 0581227	02/02/94	JP-A- 6054289	25/02/94
WO-A2- 9603835	08/02/96	AU-A- 3127695	22/02/96
		US-A- 5574787	12/11/96