OPIC
Office de la propriété intellectuelle du Canada

CIPO
Canadian Intellectual Property Office

(12) (19) (CA) **Brevet-Patent**

(11) (21) (C) **2,171,659**
(22) 1996/03/13
(43) 1996/09/18
(45) 2001/02/27

(72) Kurumada, Rumi, JP
(72) Takahashi, Atsushi, JP
(72) Mimura, Tomonori, JP
(73) HITACHI, LTD., JP

(51) Int.Cl.[6] G01N 35/00
(30) 1995/03/17 (7-59375) JP

(54) **ANALYSEUR AUTOMATIQUE**

(54) **AUTOMATIC ANALYZER**

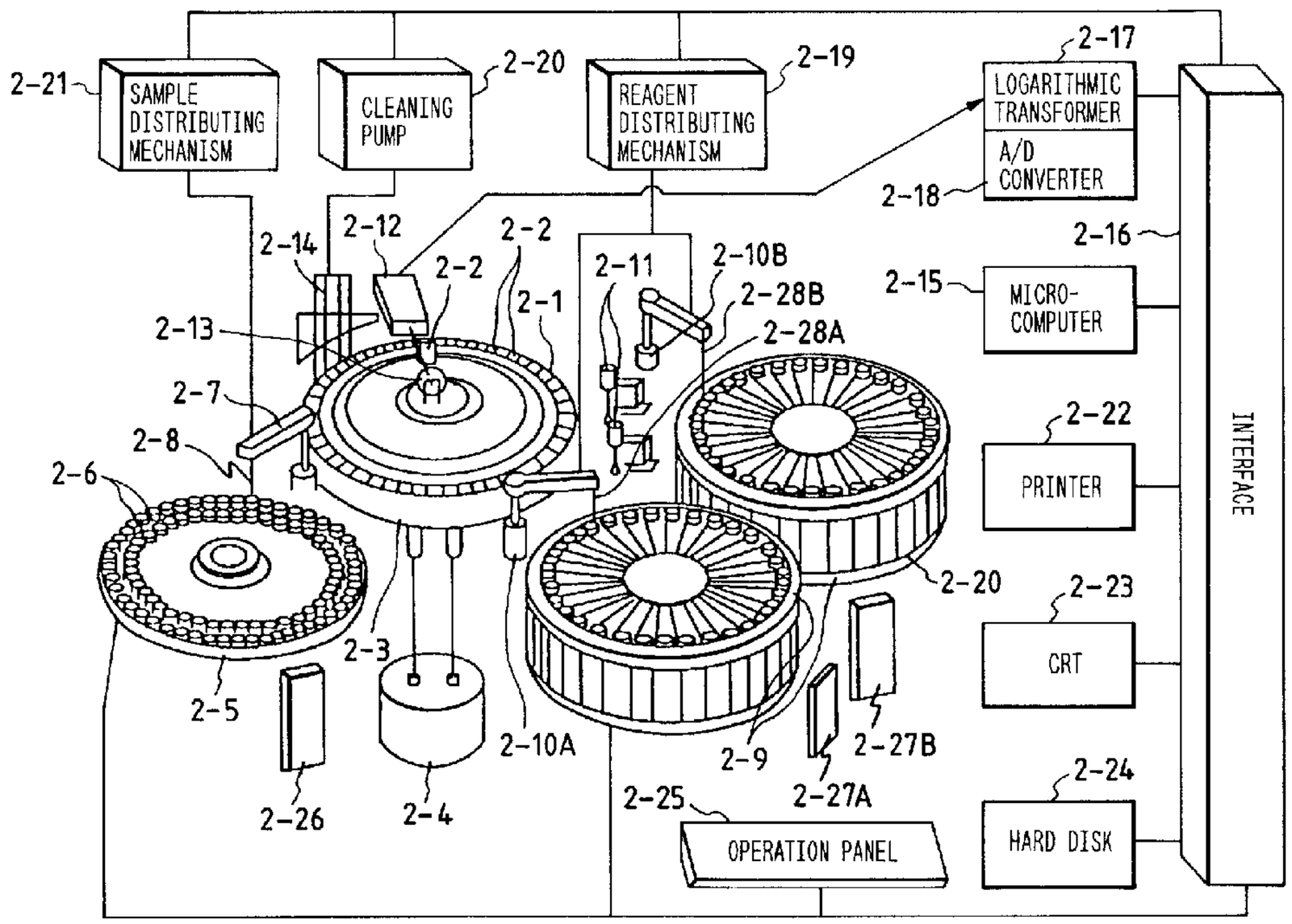

(57) In an automatic analyzer abnormalities are displayed in the form of a list composed of an alarm colored display table and an alarm detailed table. In the alarm colored display, alarms that have occurred in reagents, standard solutions and control analytes in each analytic item are displayed in the form of a list classified by color. The alarm detailed table displays analytic information concerning an abnormality of reagent, abnormality of standard solution, abnormality of control analyte, number of analyses, and term of validity, and information concerning the kind of reagent, the kind of standard solution, the kind of control analyte, and the setting position that will be newly required for analysis several hours in the future.

Abstract

In an automatic analyzer abnormalities are displayed in the form of a list composed of an alarm colored display table and an alarm detailed table. In the alarm colored display, alarms that have occurred in reagents, standard solutions and control analytes in each analytic item are displayed in the form of a list classified by color. The alarm detailed table displays analytic information concerning an abnormality of reagent, abnormality of standard solution, abnormality of control analyte, number of analyses, and term of validity, and information concerning the kind of reagent, the kind of standard solution, the kind of control analyte, and the setting position that will be newly required for analysis several hours in the future.

AUTOMATIC ANALYZER

The present invention relates to an automatic analyzer, and particularly to an automatic analyzer in which abnormalities of reagents and samples are displayed.

In an ordinary automatic analyzer, not only are the setting states of reagents, control analytes, standard solutions, and so on, alarms, analytic result data, etc. displayed on separate scenes, but also such information is displayed whether it is abnormal or not.

Further, the prediction of abnormality of analysis and the display of alarms several hours forward are insufficient; merely the period required for exchanging parts can be displayed.

In an automatic analyzer, the reagents, control analytes, standard solutions, etc. need to be taken in combination, so that analytic result data are obtained using these reagents, control analytes, standard solutions, etc. In an automatic analyzer using this ordinary technique, it is, however, difficult for all items to be managed by a human operator because these matters have different parameters and different terms of validity.

Further, in this ordinary technique, it is not easy to predict an abnormality of analysis several hours into the future. Accordingly, there arises a problem in that re-analyzing or the like is required to prevent speedy analysis, and the saving of reagents, control analytes and standard solutions is necessary, because a measure counter to

abnormality may need to be taken after the occurrence of data failure.

An object of the present invention is to provide an automatic analyzer that is adapted to make it possible to take speedy measures against an abnormality.

Another object of the present invention is to provide an automatic analyzer adapted to make it possible to save reagents against an abnormality.

An additional object of the present invention is to provide an automatic analyzer adapted to make it possible to save both reagents and samples against an abnormality.

Yet another object of the present invention is to provide an automatic analyzer adapted to make it possible to improve the analytic accuracy caused by the occurrence of an abnormality.

In accordance with one aspect of the present invention there is provided an automatic analyzer comprising means for reacting samples with reagents so as to obtain reacted solutions, means for measuring the reacted solutions so as to analyze analytic items in the samples, means for detecting possible abnormalities of the reagents, and means for displaying the abnormalities in a list form, with the abnormalities associated with the analytic items.

In accordance with another aspect of the present invention there is provided an automatic analyzer comprising means for reacting samples with reagents so as to obtain reacted solutions, means for measuring the reacted solutions so as to analyze analytic items in the samples, means for detecting possible abnormalities of the samples and the reagents, and means for displaying the abnormalities in a list form, where abnormalities detected and tagged are taken from the group of incorrect setting position, and where details of the abnormalities corresponding to the relationships between the

abnormalities and the analytic items for the samples and the reagents are indicated as well as relationships between the detected abnormalities and the analytic items for the samples and the reagents.

In accordance with yet another aspect of the present invention there is provided an automatic analyzer comprising means for reacting samples with reagents so as to obtain reacted solutions, means for measuring the reacted solutions so as to analyze analytic items in the samples, means for predictively detecting possible abnormalities of the reagents in a predetermined time, and means for displaying the abnormalities in a list form with the abnormalities associated with the analytic items.

In accordance with still yet another aspect of the present invention there is provided an automatic analyzer comprising means for reacting samples with reagents so as to obtain reacted solutions, means for measuring the reacted solutions so as to analyze analytic items in the samples, means for predictively detecting possible abnormalities of the samples and the reagents in a predetermined time, and means for displaying the abnormalities in a list form with the abnormalities associated with the analytic items, where abnormalities detected and tagged are taken from the group of incorrect setting position, and where details of the abnormalities corresponding to the relationships between the abnormalities and the analytic items for the samples and the reagents are indicated as well as relationships between the detected abnormalities and the analytic items for the samples and the reagents.

In accordance with still yet another aspect of the present invention there is provided an automatic analyzer comprising means for reacting standard solutions and control samples with reagents, respectively, so as to obtain reacted solutions, means

for measuring absorbance of the reacted solutions so as to analyze analytic items in the standard solutions and the control samples, means for detecting possible abnormalities of the standard solutions, the control samples and the reagents in a predetermined time, and means for displaying the abnormalities in a list form with the abnormalities associated with the analytic items.

Other preferred features of the present invention will become apparent from the descriptions of the preferred embodiments taken in connection with the accompanying drawings.

IN THE DRAWINGS

Fig. 1 is a view showing an example of an alarm list display according to the present invention,

Fig. 2 is a view showing the configuration of an automatic analyzer as an embodiment of the present invention,

Fig. 3 is a flow chart showing the operation of the automatic analyzer of Fig. 2,

Fig. 4 is a flow chart of the detailed operation, showing part of the operation flow depicted in Fig. 3,

Fig. 5 is a flow chart of the detailed operation showing part of the operation flow depicted in Fig. 3, and

Fig. 6 is a view showing an example of a printed report according to an embodiment of the present invention.

In advance of the detailed description of an embodiment of the present invention, the outline of the preferred embodiment will be described with reference to Fig. 1. Fig. 1 shows an example of a display of functions that is composed of an alarm colored display table 1-1, and an alarm detailed table 1-2. The alarm colored display table 1-1 is a table for displaying an abnormality in brief. Alarms that have occurred in reagents, standard solutions and control analytes in respective analytic items are listed on the alarm colored display table 1-1 so as to be classified by colors. Analytic information concerning the abnormality of reagents, the abnormality of standard solutions, the abnormality of control analytes, the number of analyses, the term of validity, alarms, etc. and information concerning the kinds, set positions, or the like, of reagents, standard solutions and control analytes which will be newly required for analysis in the future several hours are listed on the alarm detailed table 1-2.

The alarm colored display table 1-1 will be described first. The names of items in which alarms have occurred in reagents, standard solutions and control analytes are displayed in the column 1-3. Colors showing the levels of alarms are displayed in corresponding columns of reagent 1-4, standard solution 1-5 and control analyte 1-6 in corresponding lines of items in which alarms have occurred. The "colors showing the levels of alarms" expresses the degree of alarm significance or the degree of countermeasure emergency. Red indicates an alarm at the level of an emergency, yellow indicates an alarm at the level of caution, and purple indicates an alarm at the level of warning. For example, 1-7 is red which indicates that a red-level alarm has occurred in the reagent of item 2. 1-8 is yellow which indicates that a yellow-level alarm has occurred in the reagent of item 5. 1-9 is purple which indicates that a purple-level alarm has occurred in the reagent of item 7. When a plurality of alarms has occurred in one item, the highest alarm in degree of significance is displayed preferentially. Similarly, alarm colors displayed in the standard solution column and in the control analyte column express the level of alarms in respective items. Further, items in which alarms have occurred in reagents, standard solutions and control analytes are arranged in the name column 1-3 in order of alarm significance. That is, of the items displayed on the alarm colored display table 1-1, the upper item requires a more urgent countermeasure than the lower item. Whenever an alarm occurs, the table is real-time edited and displayed again.

The alarm detailed table 1-2 will be described below. Information necessary for the alarm contents and alarm countermeasures displayed on the alarm colored table 1-1 with respect to reagents, standard solutions and control analytes is displayed on the alarm detailed table 1-2.

The reference numeral 1-9 designates an alarm detailed display section for reagents (including cleaning solutions, sample diluents, and so on). Alarm level colored display 1-10, item name 1-11, kind of reagent 1-12, reagent set position 1-13, reagent production number 1-14, alarm detail 1-15 and number of residual analyses 1-16 are displayed on the alarm detailed display section 1-9. When a plurality of alarms has occurred in one item, all alarms are displayed in this portion. Alarms concerning the abnormality of reagent and the number of analyses are (1) no amount of residue 1-31, (2) smaller amount of residue (than the 100 tests' amount) 1-32, (3) smaller amount of residue than the one day's amount 1-33, etc. Alarms concerning the expiration of the term of validity are (4) expiration of the term of validity of reagent 1-34, (5) over the number of days of use 1-35 from the start day of use (unsealed day), etc. Alarms concerning reagents which will be newly required for analysis several hours in the future are (6) no setting of reagents in items requested to be analyzed 1-36, (7) setting position error 1-37, etc. In the case where setting positions or setting disks are determined as the positions where reagents are set, the positions or disk numbers are, respectively, displayed in the alarm detail column 1-15. The examples of the aforementioned

reagent alarms (1) to (7) occur before analysis or in the period of analysis.

Alarm level colored display 1-18, standard solution name 1-19, position 1-20, production number 1-21 and alarm detail 1-22 are displayed on a standard solution alarm detailed display section 1-17. Alarms concerning an abnormality of standard solutions and the number of analyses are (1) data alarm 1-38, (2) standard solution shortage alarm (no amount of residue) 1-39, etc. Alarms concerning the expiration of the term of validity are (3) expiration of the term of validity of standard solution 1-40, etc. Alarms concerning standard solutions that will be newly required for analysis several hours in the future are (4) no setting of standard solutions in items requested to be analyzed 1-41, (5) setting position error 1-42, etc. Positions to which standard solutions need to be set are displayed in the alarm detail column 1-22. The examples of the aforementioned standard solution alarms (1) and (2) occur only in the period of analysis. The examples of the standard solution alarms (3) to (5) occur before analysis or in the period of analysis.

Alarm level colored display 1-24, control analyte name 1-25, position 1-26, production number 1-27 and alarm detail 1-28 are displayed on a control analyte alarm detailed display section 1-23. Alarms concerning an abnormality of control analytes and the number of analyses are (1) data alarm 1-43, (2) control analyte shortage alarm (no amount of residue) 1-44, etc. Alarms concerning the expiration of the term of

validity are (3) expiration of the term of validity of control analyte 1-45, etc. Alarms concerning control analytes that will be newly required for analysis several hours in the future are (4) no setting of control analytes in items requested to be analyzed, (5) setting position error, etc. Positions to which control analytes need to be set are displayed in the alarm detail column 1-28. The examples of the aforementioned control analyte alarms (1) and (2) occur only in the period of analysis. The examples of the control analyte alarms (3) to (5) occur before analysis or in the period of analysis.

Further, scroll bars 1-29 and 1-30 are used for scrolling the display page when the number of alarm items is larger than the number of display lines on the screen.

As described above, the alarm colored display table 1-1 makes it easy to grasp items in which alarms have occurred and the significance of these alarms. The alarm detailed table 1-2 indicates clearly the countermeasures that will be taken.

An embodiment of the present invention will be described below with reference to Figs. 2 through 6.

Fig. 2 is a schematic view of an automatic analyzer. In Fig. 2, the reference numeral 2-1 designates a reaction disk. Reaction vessels 2-2 are disposed on the outer circumference of the reaction disk 2-1. The temperature of the reaction disk 2-1 as a whole is kept to a predetermined value by a heat retaining tank 2-3. The reference numeral 2-4 designates a heat retaining water supply portion for the tank 2-3. The reference numeral 2-5 designates a sample disk mechanism. A

large number of sample cups 2-6 are disposed on this mechanism 2-5. The reference numeral 2-26 designates a sample cup bar code reader that decodes bar codes added to the sample cups 2-6. A sample in each sample cup 2-6 is suitably extracted by a nozzle 2-8 of a sample pipetting mechanism 2-7 and is injected into a reaction vessel in a sample injection position. The nozzle 2-8 has a liquid surface sensor at its end, so that the amount of the sample residue can be measured by the liquid surface sensor. The reference numeral 2-9 designates reagent disk mechanisms on which reagent cups are disposed. The reagent disk mechanisms 2-9 are provided with reagent pipetting mechanisms 2-10A and 2-10B, respectively. The reference numerals 2-27A and 2-27B designate reagent bottle bar code readers that decode bar codes added to the reagent cups. Reagents necessary for analysis are suitably extracted and injected into the reaction vessels 2-2 by nozzles 2-28A and 2-28B of the reagent pipetting mechanisms 2-10A and 2-10B. Each of the nozzles 2-28A and 2-28B has a liquid surface sensor at its end, so that the amount of the reagent residue can be measured. The reference numeral 2-11 designates a stirring mechanism. The reference numeral 2-12 designates a multi-wavelength photometer; and 2-13, a light source. A reaction vessel 2-2 for storing an object to be measured is disposed between the multi-wavelength photometer 2-12 and the light source 2-13. The reference numeral 2-14 designates a cleaning mechanism. In a control system and a signal processing system, the reference numeral 2-15 designates a micro-computer; 2-16, an interface; 2-17, a

logarithmic transformer; 2-18, an A/D converter; 2-19, a reagent distributing mechanism; 2-20, a cleaning pump; and 2-21, a sample distributing mechanism. Further, the reference numeral 2-22 designates a printer for printing a report; 2-23, a CRT for displaying the report; 2-24, a hard disk as a storage device; and 2-25, an operation panel (keyboard) for inputting data.

The principle of analysis in this automatic analyzer will now be described. A predetermined amount of each sample is injected into a reaction vessel 2-2 by using the nozzle 2-8 of the sample pipetting mechanism 2-7 in accordance with analytic parameters stored in the memory in the micro-computer 2-15. Then, the reaction vessel 2-2 containing the sample injected therein is moved to a reagent injection position by rotating the reaction disk 2-1. Then, a predetermined amount of a reagent is injected into the reaction vessel 2-2 having the sample injected by using the nozzles 2-28A and 2-28B of the reagent pipetting mechanisms 2-10A and 2-10B in accordance with analytic parameters stored in the memory in the micro-computer 2-15. Then, the sample and the reagent are stirred by the stirring mechanism 2-11 and mixed. When the reaction vessel 2-2 crosses the photometric position, absorbance is measured by the multi-wavelength photometer 2-12. The absorbance thus measured is fed into the micro-computer 2-15 via the logarithmic transformer 2-17, the A/D converter 2-18 and the interface 2-16. The absorbance is converted into density data on the basis of an analytical

curve (calibration) that is generated from the absorbance of a standard solution measured by an analyzing method designated correspondingly to each item in advance. The component density data thus measured is output to the printer or display.

In the embodiment of the present invention, lists of reagents, standard solutions and control analytes are displayed in accordance with the following judgment rule.

Reagent:

When items requested to be analyzed satisfy the following seven conditions, the items are displayed as a list. Alarms (1) to (7) occur before analysis or in the period of analysis.

(1) When the number of residual analyses is not larger than the number of scheduled analyses in one day, the alarm level is selected to be purple. The number of scheduled analyses in one day can be set freely by a user. The number of scheduled analyses in one day is inputted through the operation panel by using a certain scene.

(2) When the number of residual analyses is not larger than the number of analyses for the reagent residue shortage alarm, the alarm level is selected to be yellow.

The number of analyses for the reagent residue shortage alarm can be set freely by the user, and this number is inputted through the operation panel by using a certain scene.

(3) When the number of residual analyses is zero, the alarm level is selected to be red.

(4) When the term of validity expires, the alarm level is selected to be yellow.

(5) When the term of use exceeds a predetermined number of days after the day on which the reagent was unsealed, that is, after the day on which the reagent began to be used (a day on which the reagent was set in the reagent disk and on which the bar code was first decoded), the alarm level is selected to be yellow.

(6) When the setting position is mistaken, the alarm level is selected to be yellow.

(7) When there is no reagent in an item requested to be analyzed, the alarm level is selected to be red.

Standard Solution:

When standard solutions requested to be analyzed satisfy the following six conditions, the standard solutions are displayed as a list. Alarms (5) and (6) occur in the period of analysis. Alarms (1) to (4) occur before analysis or in the period of analysis.

(1) When a standard solution scheduled to be used for analysis in a period of from 20 minutes to 1 hour is not set in the sample disk mechanism 2-5, the alarm level is selected to be purple.

(2) When a standard solution scheduled to be used for analysis in a period of from 3 minutes to 20 minutes is not set in the sample disk mechanism 2-5, the alarm level is selected to be yellow.

(3) When a standard solution scheduled to be used for analysis in a period of 3 minutes is not set in the sample disk mechanism 2-5, the alarm level is selected to be red.

(4) When the term of validity expires, the alarm level is selected to be yellow.

(5) When a standard solution shortage alarm is given to the analytic data, the alarm level is selected to be red.

(6) When a standard solution abnormality alarm is given to the analytic data, the alarm level is selected to be red.

Control Analyte:

When control analytes requested to be analyzed satisfy the following six conditions, the control analytes are displayed as a list. Alarms (5) and (6) occur in the period of analysis. Alarms (1) to (4) occur before analysis or in the period of analysis.

(1) When a control analyte scheduled to be used for analysis in a period of from 20 minutes to 1 hour is not set in the sample disk mechanism 2-5, the alarm level is selected to be purple.

(2) When a control analyte scheduled to be used for analysis in a period of from 3 minutes to 20 minutes is not set in the sample disk mechanism 2-5, the alarm level is selected to be yellow.

(3) When a control analyte scheduled to be used for analysis in a period of 3 minutes is not set in the sample disk mechanism 2-5, the alarm level is selected to be red.

(4) When the term of validity expires, the alarm level is selected to be purple.

(5) When a control analyte shortage alarm is given to the analytic data, the alarm level is selected to be red.

(6) When a control analyte abnormality alarm is given to the analytic data, the alarm level is selected to be red.

Fig. 3 is a flow chart showing the routine of displaying the list in the aforementioned manner. In Fig. 3, the steps specified by a background color show the steps of the user's work, and the other steps show the steps of the automatic analyzer's work. Further, analytic parameters and alarm parameters, such as the number of scheduled analyses in one day, the number of analyses for the reagent residue shortage alarm, etc., are set in advance correspondingly to the items and stored in the hard disk.

Step 3-1: The automatic analyzer is started up.

Step 3-2: The bar codes of reagents are read so that the amounts of the residues are detected and stored. The operation of the automatic analyzer will be described with reference to Fig. 2. After a bar code label containing information concerning the kind of reagent, production number and term of validity is fixed to each reagent cup, the reagent cup is set in the reagent disk mechanism 2-9. The reagent disk mechanism 2-9 rotates, so that the bar code label added to each reagent cup is decoded by the bar code readers 2-27A and 2-27B to thereby grasp the setting position. At the same time, the nozzles 2-28A and 2-28B detect the amounts of the reagents in the reagent cups to thereby measure the amounts of the reagent residues. The information concerning the setting position, the kind of reagent, the production number, and the term of validity, as well as the amounts of the reagent residues are stored in the memory in the micro-computer 2-15.

Step 3-3: The bar codes of the standard solutions are read and stored. After a bar code label containing information concerning the kind of standard solutions, production number and term of validity is fixed to each standard solution sample cup, the sample cup is set in the sample disk mechanism 2-5. The sample disk mechanism 2-5 rotates, so that the bar code added to each sample cup 2-6 is decoded by the bar code reader 2-26 to thereby grasp the setting position. The information concerning the setting position, the kind of standard solution, the term of validity, and the production number are stored in the memory in the micro-computer 2-15.

Step 3-4: The bar codes of control analytes are read and stored. After a bar code label containing information concerning the kind of control analyte, production number and term of validity is fixed to each control analyte sample cup, the sample cup is set in the sample disk mechanism 2-5. Similarly to the case of the standard solution, the sample disk mechanism 2-5 rotates, so that the bar code added to each sample cup 2-6 is decoded by the bar code reader 2-26 to thereby grasp the setting position. The information concerning the setting position, the kind of control analyte, the term of validity, and the production number are stored in the memory in the micro-computer 2-15.

Step 3-5: A request to analyze at least one sample (selected from standard solutions necessary for forming calibration, control analytes used for checking the apparatus state such as probe choking, reagent deterioration, etc. in the measurement of patient analytes, and patient analytes) is inputted by the user through the operation panel using a corresponding scene.

Step 3-6: Alarm lists are edited on the basis of the information stored at steps 3-2, 3-3 and 3-4 and the analysis request inputted at step 3-5.

The routine of editing the alarm lists will be described with reference to Figs. 4 and 5. An alarm colored display table, a table for storing alarms of reagents, standard solutions and control analytes by items is provided in the memory in the micro-computer. Similarly, an alarm detailed table on which reagents are classified by items and the kinds thereof, standard solutions are classified by the kinds thereof and control analytes are classified by kinds thereof is provided in the memory in the micro-computer.

A list of reagents is edited in accordance with the flow chart of Fig. 4. In step 4-1, a reagent alarm colored display table and an item counter are initialized. In step 4-2, the item counter is increased by one. In step 4-3, a judgment is made as to whether the item $\underline{i}$ is requested to be analyzed or not. When the item $\underline{i}$ is not requested to be analyzed, the routine goes back to step 4-2. When the item $\underline{i}$ is requested to be analyzed, a reagent counter for the item $\underline{i}$ is initialized in step 4-4. In step 4-5, the reagent counter is

increased by one. In step 4-6, a judgment is made as to whether the reagent j is set on the reagent disk or not. When the reagent j is not set on the reagent disk, a red alarm "no reagent" is stored in the column of the item i and the reagent j on the alarm detailed table in step 4-7. When the reagent j is set on the reagent disk, a judgment is made in step 4-8 as to whether the setting position is correct or not. When the setting position is not correct, a red alarm "setting position error" is stored in the column of the item i and the reagent j on the alarm detailed table in step 4-9. When the setting position is correct, a judgment is made in step 4-10 as to whether there is any residue or not. When there is no residue, a red alarm "no residue" is stored in the column of the item i and the reagent j on the alarm detailed table in step 4-11. When there is residue, a judgment is made in step 4-12 as to whether the number of residual analyses is not larger than the number of analyses for the reagent residue shortage alarm. If the number of residual analyses is not larger than the number of analyses for the reagent residue shortage alarm, a yellow alarm "residue shortage" is stored in the column of the item i and the reagent j on the alarm detailed table in step 4-13. When the number of residual analyses is larger than the number of analyses for the reagent residue shortage alarm, a judgment is made in step 4-14 as to whether the number of days in use of the reagent is larger than the number of days allowed. When the number of days in use of the reagent is larger than the number of days allowed, a yellow alarm "over the number of days allowed" is stored in

the column of the item i and the reagent j on the alarm detailed table in step 4-15. When the number of days in use of the reagent is not larger than the number of days allowed, a judgment is made in step 4-16 as to whether the term of validity of the reagent runs out or not. When the term of validity runs out, a yellow alarm "expiration of the term of validity" is stored in the column of the item i and the reagent j on the alarm detailed table in step 4-17. When the term of validity does not run out, a judgment is made in step 4-18 as to whether the amount of the residue of the reagent j satisfies the number of scheduled analyses of the item i in one day or not. When the amount of the residue does not satisfy the number of scheduled analyses of the item i in one day, a purple alarm "smaller than the number of scheduled analyses in one day" is stored in the column of the item i and the reagent j on the alarm detailed table in step 4-19. When the amount of the residue satisfies the number of scheduled analyses of the item i in one day, the routine goes to step 4-20. Also, after step 4-7, after step 4-9, after step 4-11, after step 4-13, after step 4-15, after step 4-17 or after step 4-19, the routine goes to step 4-20. In step 4-20, a judgment is made as to whether an alarm having a higher priority than the alarm of the reagent j is set or not in the item i on the alarm colored display table. When the alarm of the reagent j has a higher priority, the alarm color of the reagent j is set in the item i on the alarm colored display table in step 4-21. When the alarm of the reagent j has a lower priority, a judgment is made in step 4-22 as to whether

the reagent counter is terminated or not, that is, j reaches the number of reagents for one item or not. When the reagent counter is not terminated, the routine goes back to step 4-5. When the reagent counter is terminated, a judgment is made in step 4-23 as to whether the item counter is terminated or not, that is, i reaches the number of items or not. When the item counter is not terminated, the routine goes back to step 4-2. When the item counter is terminated, this routine is finished in step 4-24.

As the edition of alarm information concerning standard solutions and control analytes, the routine shown in Fig. 5 is subjected to standard solutions and control analytes, respectively. The "sample" shown in Fig. 5 means a standard solution or control analyte. If a standard solution is under processing, the "sample" means the standard solution. If a control analyte is under processing, the "sample" means the control analyte. In step 5-1, the item alarm of a corresponding sample in the alarm colored display table and a sample counter i are initialized. In step 5-2, the sample counter i is increased by one. In step 5-3, a judgment is made as to whether the sample i is requested to be analyzed or not. When the sample i is not requested to be analyzed, the situation of the routine goes back to step 5-2. When the sample i is requested to be analyzed, a judgment is made in step 5-4 as to whether a sample shortage alarm occurs or not. When the alarm occurs, a red alarm "sample shortage" is stored in the sample i on the alarm detailed table in step 5-5. When the sample shortage alarm does not occur (inclusive of the

case of no data before analysis), a judgment is made in step 5-6 as to whether a data abnormality alarm occurs or not. When the alarm occurs, a red alarm "data abnormality" is stored in the sample i on the alarm detailed table in step 5-7. When the data abnormality alarm does not occur (inclusive of the case of no data before analysis), a judgment is made in step 5-8 as to whether the sample i is set or not. When the sample i is not set, the schedule time up to analysis is estimated in step 5-9. When the schedule time is shorter than 3 minutes, a red alarm "no sample setting" is stored in the sample i on the alarm detailed table in step 5-10. When the schedule time is not shorter than 3 minutes and shorter than 20 minutes, a yellow alarm "no sample setting" is stored in the sample i on the alarm detailed table in step 5-11. When the schedule time is not shorter than 20 minutes and shorter than 1 hour, a purple alarm "no sample setting" is stored in the sample i on the alarm detailed table in step 5-12. When the schedule time is not shorter than 1 hour, no alarm is stored. When the sample i has been set, a judgment is made in step 5-13 as to whether the term of validity runs out or not. When the term of validity runs out, a yellow alarm "expiration of the term of validity" is stored in the sample i on the alarm detailed table in step 5-14. When the term of validity does not run out, the routine goes to step 5-15. After step 5-5, after step 5-7, after step 5-10, after step 5-11, after step 5-12 or after step 5-14, the routine goes to step 5-17.

In step 5-15, a judgment is made as to whether an alarm having a higher priority than the alarm of the sample i is set in the alarm on the alarm colored display table in each item using the sample i or not. When the alarm of the sample i has a higher priority, the alarm color of the sample i is set in a corresponding item on the alarm colored display table in step 5-16. The routine goes to step 5-17. In step 5-17, a judgment is made as to whether the sample counter is terminated or not, that is, i reaches the number of samples or not. When the sample counter is not terminated, the routine goes back to step 5-2. When the sample counter is terminated, this routine is finished in step 5-18.

The flow chart of the routine of editing the lists in step 3-6 of Fig. 3 has been described with reference to Figs. 4 and 5.

Step 3-7: The contents edited by step 3-6 are displayed as lists. Fig. 1 shows an example of a display. The alarm colored display list is generated by reference to the alarm colored display table in the memory and the information, such as the setting position, the production number, the residual amount, etc. in the memory, so that items in which red alarms have occurred are displayed with first priority. Then, items in which yellow alarms have occurred and items in which purple alarms have occurred are displayed in that order. The alarm detailed list is generated so that red alarms, yellow alarms and purple alarms are displayed in order with respect to reagents, standard solutions and control analytes.

Step 3-8: If necessary, the lists are printed. If not necessary, the routine goes to step 3-9. The user judges whether printing is necessary or not.

Fig. 6 shows an example of printing. As a report, the setting positions of reagents, standard solutions and control analytes and the same contents as those of the alarm detailed list (alarm detailed table 1-2 in the right of the example of display in Fig. 1) are printed.

Step 3-9: The user takes measures to counter the alarms by reference to the contents displayed by step 3-7 or the contents printed by step 3-8. For example, in the case of "reagent shortage", "sample shortage" or "no sample setting", the user does the work of bringing samples from a refrigerator, or the like, to supplement the samples by reference to the report printed by step 3-8.

After the countermeasures, the routine automatically goes back to step 3-2, and the procedure up to step 3-7 is carried out so that lists are displayed again. The procedure from step 3-2 to step 3-9 is repeated until the alarm countermeasure is sufficient. Alarm display before analysis has been described.

Step 3-10: The procedure surrounded by the broken line in Fig. 3 is an analyzing procedure. When a request to start analysis is inputted through the operation panel, the analysis is started. Samples such as patient analytes, standard solutions, control analytes, etc. are distributed on the basis of the analyzing request of step 3-5. At the same time, the amounts of residues are detected by the nozzles of the sample

distributing mechanisms, so that the amounts of sample residues to be stored in the memory of the micro-computer are updated.

Step 3-11: Reagents necessary for analyzing samples are distributed. At the same time, the amounts of residues are detected by the nozzles of the reagent distributing mechanisms, so that the amounts of sample residues to be stored in the memory of the micro-computer are updated.

Step 3-12: The absorbance of reaction solutions reacted on the reaction disk is measured by the multi-wavelength photometer.

Step 3-13: Analytic result data measured by the step 3-12 are calculated and outputted so as to be stored in the hard disk.

Step 3-14: The lists are edited again on the basis of the amounts of residual samples updated by step 3-10, the amounts of residual reagents updated by step 3-11, the data outputted by step 3-12, and the re-judgment of the schedule time of analysis, etc. The editing procedure is the same as that of step 3-6.

Step 3-15: The alarm list edited by step 3-14 is displayed in the same manner as step 3-7.

Step 3-16: If necessary, the list is printed in the same manner as step 3-8.

Step 3-17: Measures to counter the alarms are taken in the same manner as step 3-9.

Step 3-18: A judgment is made as to whether all the analyses are finished or not. When all the analyses required

are finished, the routine goes back to step 3-2. When all the analyses are not finished, the routine goes back to step 3-10.

In the aforementioned flow chart of processing, the alarm state is real-time monitored.

According to the preferred embodiments of the present invention, the abnormalities of samples and reagents are detected and the abnormalities thus detected are displayed in the form of a list with the reagent abnormalities associated with the analytic items. Accordingly, measures against abnormalities can be taken speedily.

Further, the abnormalities of samples and reagents in a predetermined time are predictively detected and the abnormalities thus detected are displayed in the form of a list with the reagent abnormalities associated with the analytic items. Accordingly, not only is a saving of reagents attained but also the lowering of analytic accuracy caused by the abnormalities is reduced.

Since it is obvious that many changes and modifications can be made in the above described details without departing from the nature and spirit of the present invention, it is to be understood that the present invention is not to be limited to the details described herein.

CLAIMS

1. An automatic analyzer comprising means for reacting samples with reagents so as to obtain reacted solutions, means for measuring the reacted solutions so as to analyze analytic items in the samples, means for detecting possible abnormalities of the reagents, and means for displaying the abnormalities in a list form, with the abnormalities associated with the analytic items.

2. An automatic analyzer according to claim 1, wherein the displaying means displays the abnormalities with the abnormalities ranked on the basis of a predetermined standard.

3. An automatic analyzer according to claim 2, wherein the predetermined standard is based on a degree of significance of the abnormalities.

4. An automatic analyzer according to claim 2, wherein the predetermined standard is based on a degree of urgency for measures against the abnormalities.

5. An automatic analyzer according to claim 2, wherein the displaying means displays in a different format abnormalities of a different rank.

6. An automatic analyzer according to claim 2, wherein the displaying means displays the abnormalities according to the rank assigned.

7. An automatic analyzer comprising means for reacting samples with reagents so as to obtain reacted solutions, means for measuring the reacted solutions so as to analyze analytic items in the samples, means for detecting possible abnormalities of

the samples and the reagents, and means for displaying the abnormalities in a list form, where abnormalities detected and tagged are taken from the group of incorrect setting position, and where details of the abnormalities corresponding to the relationships between the abnormalities and the analytic items for the samples and the reagents are indicated as well as relationships between the detected abnormalities and the analytic items for the samples and the reagents.

8. An automatic analyzer comprising means for reacting samples with reagents so as to obtain reacted solutions, means for measuring the reacted solutions so as to analyze analytic items in the samples, means for predictively detecting possible abnormalities of the reagents in a predetermined time, and means for displaying the abnormalities in a list form with the abnormalities associated with the analytic items.

9. An automatic analyzer according to claim 8, wherein the displaying means displays the abnormalities with the abnormalities ranked on the basis of a predetermined standard.

10. An automatic analyzer according to claim 9, wherein the displaying means displays the ranked abnormalities according to the rank assigned.

11. An automatic analyzer comprising means for reacting samples with reagents so as to obtain reacted solutions, means for measuring the reacted solutions so as to analyze analytic items in the samples, means for predictively detecting possible abnormalities of the samples and the reagents in a predetermined time, and means for displaying the abnormalities in a list form with the abnormalities associated with the analytic items, where abnormalities detected and tagged are taken from the group of

incorrect setting position, and where details of the abnormalities corresponding to the relationships between the abnormalities and the analytic items for the samples and the reagents are indicated as well as relationships between the detected abnormalities and the analytic items for the samples and the reagents.

12. An automatic analyzer comprising means for reacting standard solutions and control samples with reagents, respectively, so as to obtain reacted solutions, means for measuring absorbance of the reacted solutions so as to analyze analytic items in the standard solutions and the control samples, means for detecting possible abnormalities of the standard solutions, the control samples and the reagents in a predetermined time, and means for displaying the abnormalities in a list form with the abnormalities associated with the analytic items.

13. An automatic analyzer according to claim 12, wherein said list form comprises abnormalities detected and tagged taken from the group of incorrect setting position, and where details of the abnormalities corresponding to the relationships between the abnormalities and the analytic items for the samples and the reagents are indicated as well as relationships between the detected abnormalities and the analytic items for the samples and the reagents.

14. An automatic analyzer according to claim 13, wherein the details of the abnormalities include information concerning the kind, setting position, presence or absence, residual amount and allowed time of the reagents.

15. An automatic analyzer according to claim 14, wherein the details of the abnormalities include information concerning name, setting position, presence or absence, residual amount, data failure and allowed time of the standard solutions, the control samples and the reagents.

FIG. 1

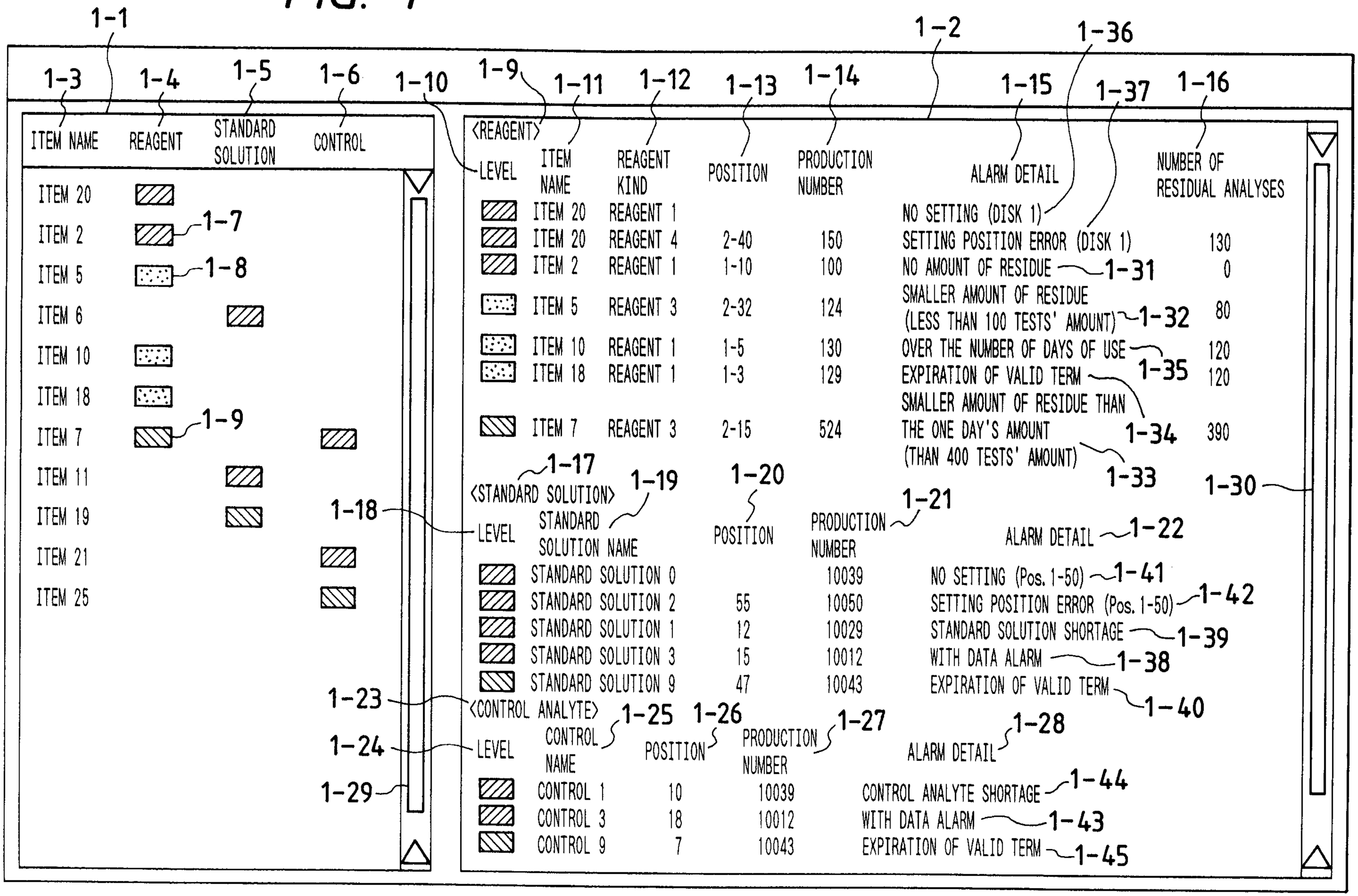

Kirby, Eades, Gale, Baker

21771659

FIG. 2

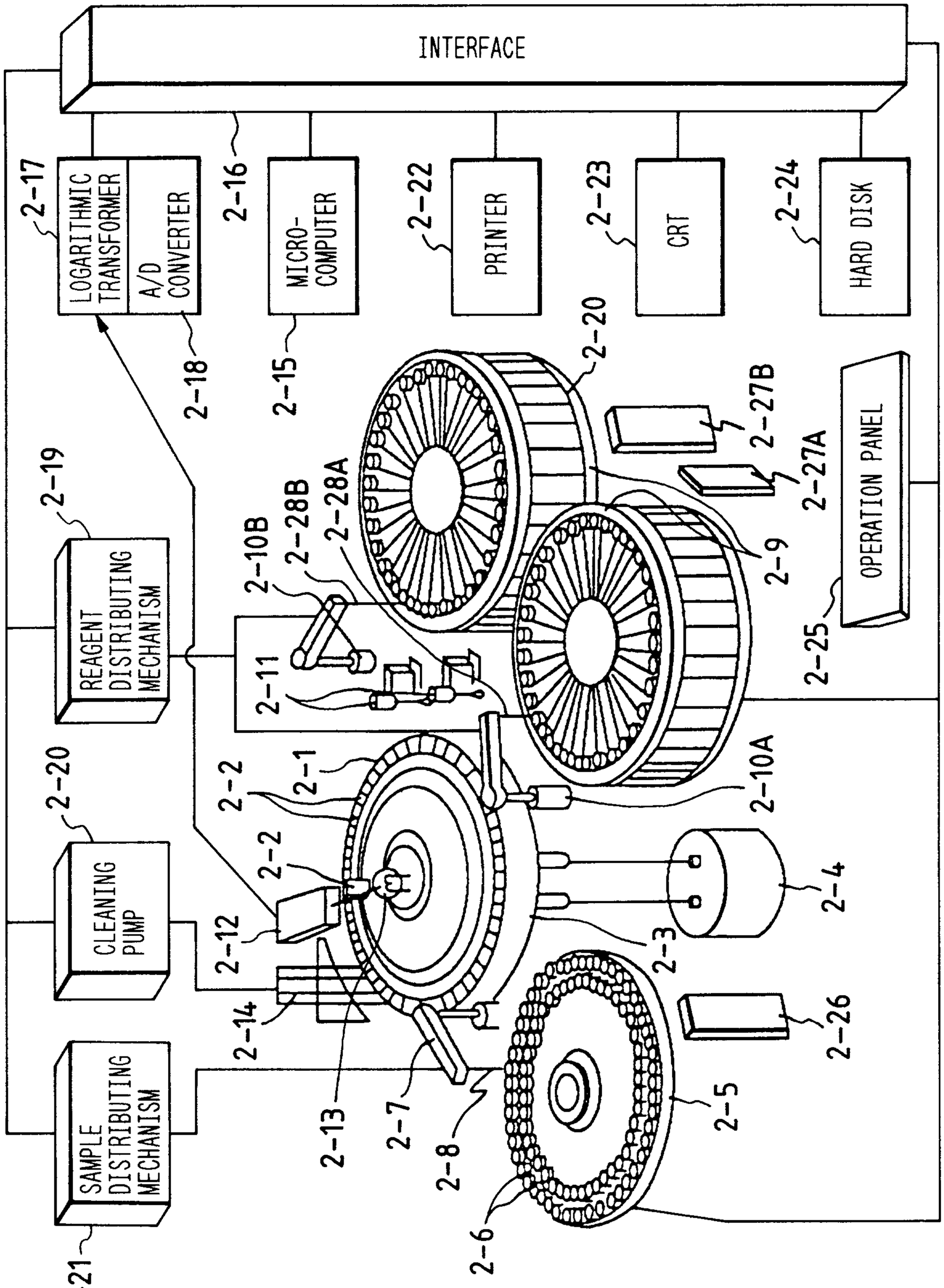
INTERFACE
2-17
LOGARITHMIC TRANSFORMER
A/D CONVERTER
2-18
2-16
MICRO-COMPUTER
2-15
2-22
PRINTER
2-23
CRT
2-24
HARD DISK
2-19
REAGENT DISTRIBUTING MECHANISM
2-20
CLEANING PUMP
2-21
SAMPLE DISTRIBUTING MECHANISM
2-20
2-27B
2-27A
OPERATION PANEL
2-25
2-9
2-10B
2-28B
2-28A
2-11
2-1
2-2
2-2
2-12
2-14
2-13
2-7
2-8
2-6
2-10A
2-3
2-4
2-26
2-5

FIG. 3

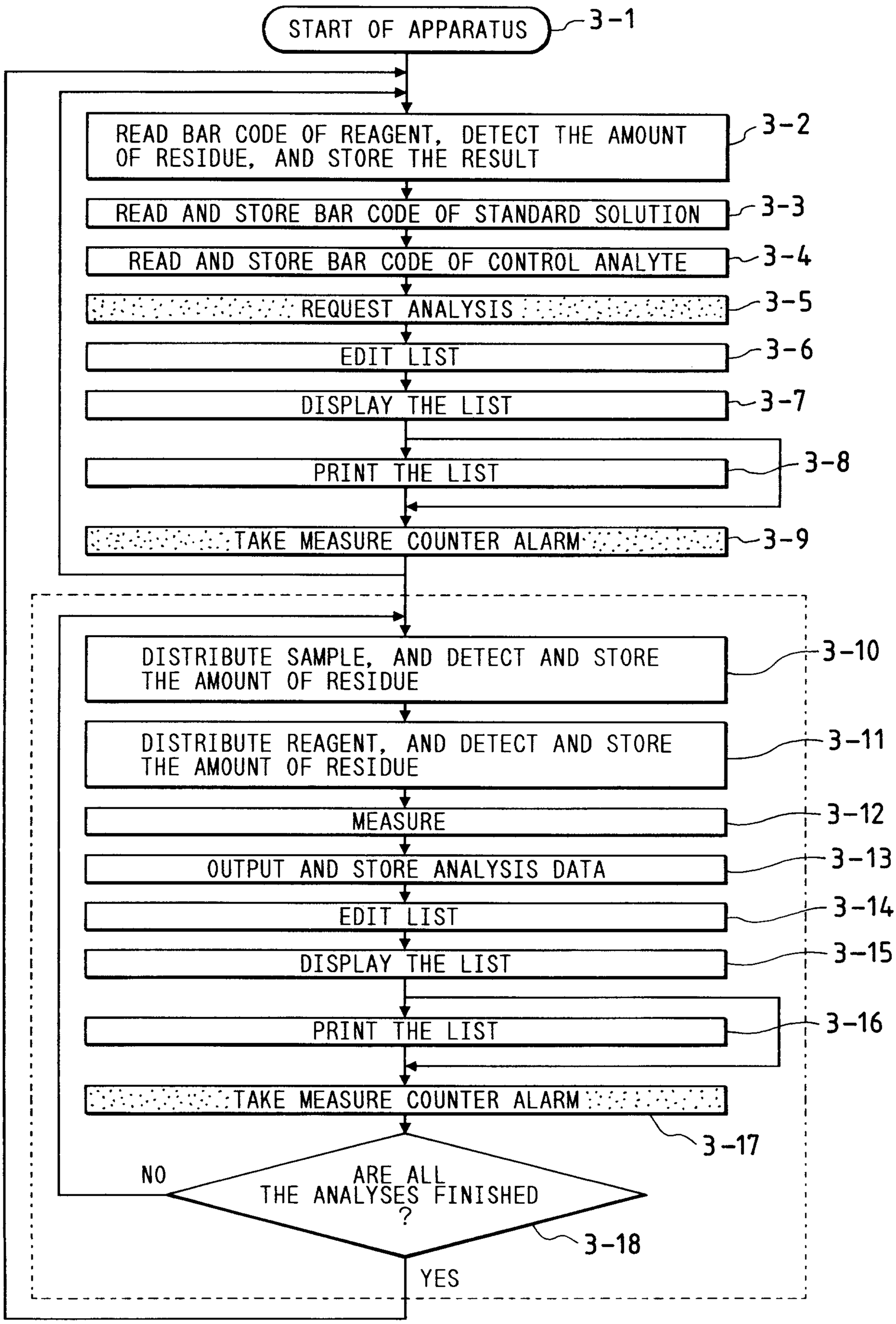
START OF APPARATUS
3-1
READ BAR CODE OF REAGENT, DETECT THE AMOUNT OF RESIDUE, AND STORE THE RESULT
3-2
READ AND STORE BAR CODE OF STANDARD SOLUTION
3-3
READ AND STORE BAR CODE OF CONTROL ANALYTE
3-4
REQUEST ANALYSIS
3-5
EDIT LIST
3-6
DISPLAY THE LIST
3-7
PRINT THE LIST
3-8
TAKE MEASURE COUNTER ALARM
3-9
DISTRIBUTE SAMPLE, AND DETECT AND STORE THE AMOUNT OF RESIDUE
3-10
DISTRIBUTE REAGENT, AND DETECT AND STORE THE AMOUNT OF RESIDUE
3-11
MEASURE
3-12
OUTPUT AND STORE ANALYSIS DATA
3-13
EDIT LIST
3-14
DISPLAY THE LIST
3-15
PRINT THE LIST
3-16
TAKE MEASURE COUNTER ALARM
3-17
ARE ALL THE ANALYSES FINISHED ?
3-18
NO
YES

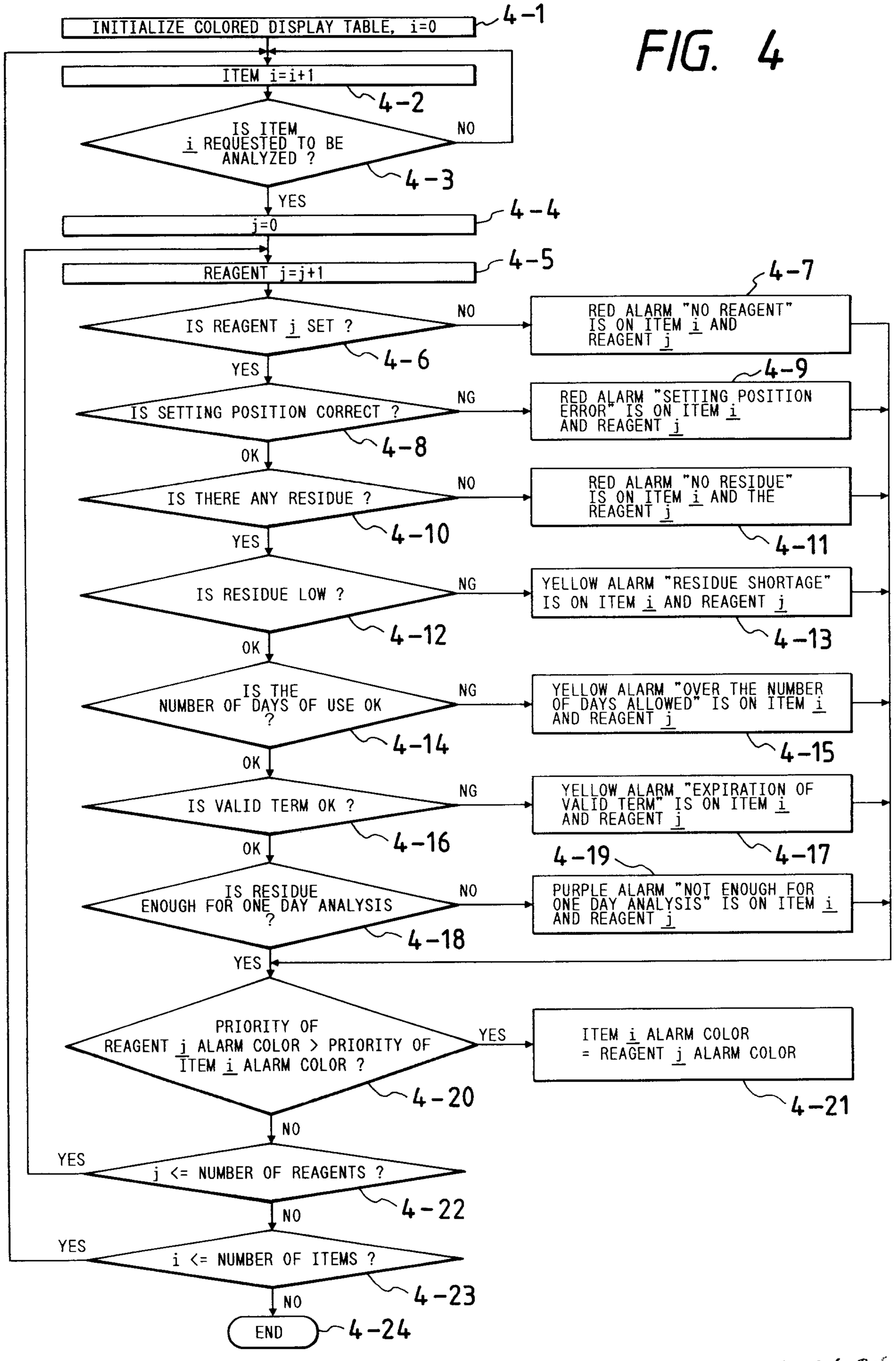
INITIALIZE COLORED DISPLAY TABLE, i=0
4-1
ITEM i=i+1
4-2
IS ITEM i REQUESTED TO BE ANALYZED ?
NO
4-3
YES
j=0
4-4
REAGENT j=j+1
4-5
IS REAGENT j SET ?
NO
4-6
RED ALARM "NO REAGENT" IS ON ITEM i AND REAGENT j
4-7
YES
IS SETTING POSITION CORRECT ?
NG
4-8
RED ALARM "SETTING POSITION ERROR" IS ON ITEM i AND REAGENT j
4-9
OK
IS THERE ANY RESIDUE ?
NO
4-10
RED ALARM "NO RESIDUE" IS ON ITEM i AND THE REAGENT j
4-11
YES
IS RESIDUE LOW ?
NG
4-12
YELLOW ALARM "RESIDUE SHORTAGE" IS ON ITEM i AND REAGENT j
4-13
OK
IS THE NUMBER OF DAYS OF USE OK ?
NG
4-14
YELLOW ALARM "OVER THE NUMBER OF DAYS ALLOWED" IS ON ITEM i AND REAGENT j
4-15
OK
IS VALID TERM OK ?
NG
4-16
YELLOW ALARM "EXPIRATION OF VALID TERM" IS ON ITEM i AND REAGENT j
4-17
OK
IS RESIDUE ENOUGH FOR ONE DAY ANALYSIS ?
NO
4-18
4-19
PURPLE ALARM "NOT ENOUGH FOR ONE DAY ANALYSIS" IS ON ITEM i AND REAGENT j
YES
PRIORITY OF REAGENT j ALARM COLOR > PRIORITY OF ITEM i ALARM COLOR ?
YES
4-20
ITEM i ALARM COLOR = REAGENT j ALARM COLOR
4-21
NO
YES
j <= NUMBER OF REAGENTS ?
4-22
NO
YES
i <= NUMBER OF ITEMS ?
4-23
NO
END
4-24

FIG. 4

FIG. 5

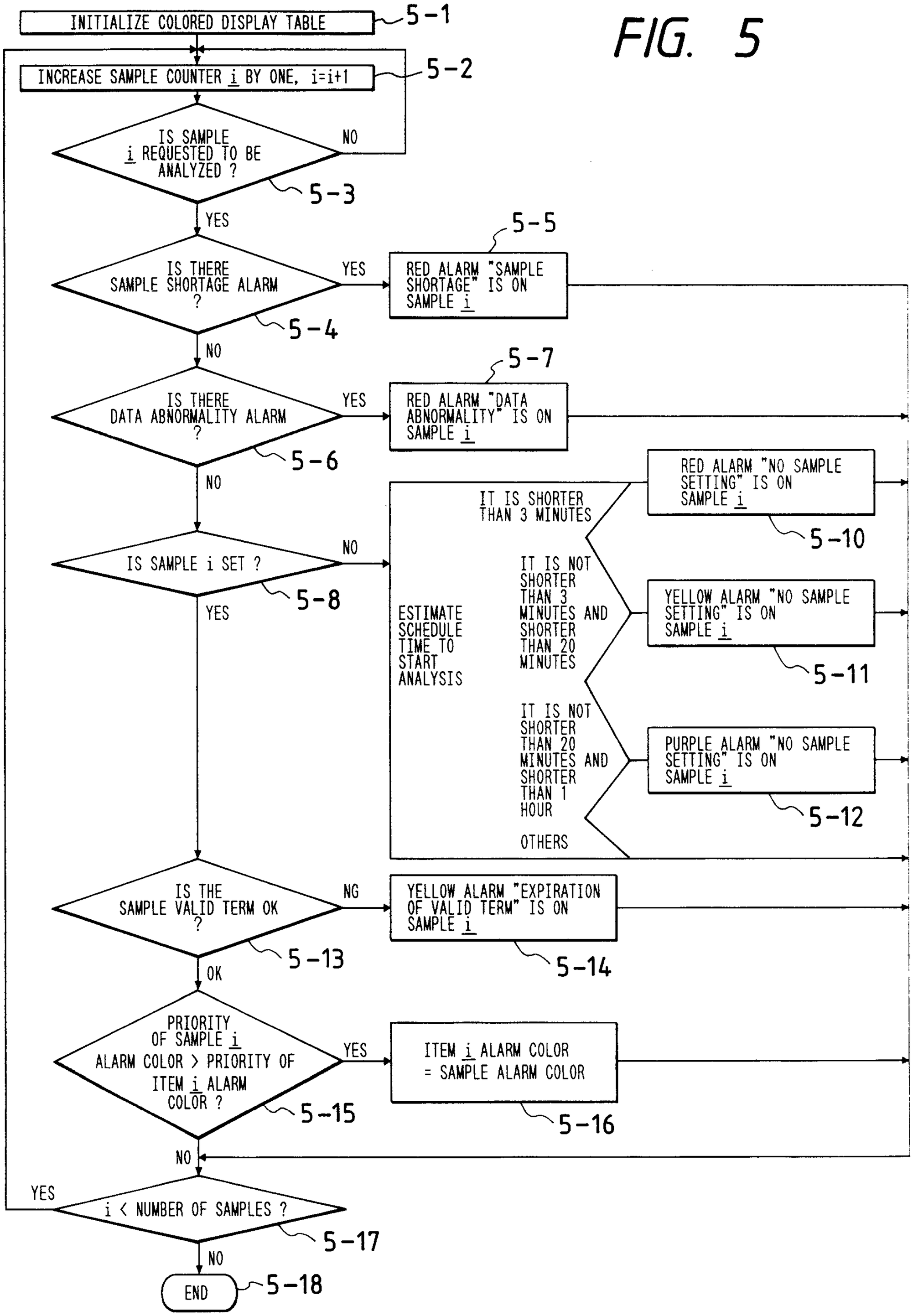
INITIALIZE COLORED DISPLAY TABLE
5-1
INCREASE SAMPLE COUNTER i BY ONE, i=i+1
5-2
IS SAMPLE i REQUESTED TO BE ANALYZED ?
NO
5-3
YES
IS THERE SAMPLE SHORTAGE ALARM ?
YES
5-4
RED ALARM "SAMPLE SHORTAGE" IS ON SAMPLE i
5-5
NO
IS THERE DATA ABNORMALITY ALARM ?
YES
5-6
RED ALARM "DATA ABNORMALITY" IS ON SAMPLE i
5-7
NO
IS SAMPLE i SET ?
NO
5-8
YES
ESTIMATE SCHEDULE TIME TO START ANALYSIS
IT IS SHORTER THAN 3 MINUTES
RED ALARM "NO SAMPLE SETTING" IS ON SAMPLE i
5-10
IT IS NOT SHORTER THAN 3 MINUTES AND SHORTER THAN 20 MINUTES
YELLOW ALARM "NO SAMPLE SETTING" IS ON SAMPLE i
5-11
IT IS NOT SHORTER THAN 20 MINUTES AND SHORTER THAN 1 HOUR
PURPLE ALARM "NO SAMPLE SETTING" IS ON SAMPLE i
5-12
OTHERS
IS THE SAMPLE VALID TERM OK ?
NG
5-13
YELLOW ALARM "EXPIRATION OF VALID TERM" IS ON SAMPLE i
5-14
OK
PRIORITY OF SAMPLE i ALARM COLOR > PRIORITY OF ITEM i ALARM COLOR ?
YES
5-15
ITEM i ALARM COLOR = SAMPLE ALARM COLOR
5-16
NO
YES
i < NUMBER OF SAMPLES ?
5-17
NO
END
5-18

FIG. 6

ALARM REPORT

<REAGENT>

ITEM NAME	REAGENT KIND	POSITION	PRODUCTION NUMBER	ALARM DETAIL	NUMBER OF RESIDUAL ANALYSIS
ITEM 20	REAGENT 1			NO SETTING (DISK 1)	
ITEM 20	REAGENT 4	2-40	150	SETTING POSITION ERROR (DISK 1)	130
ITEM 2	REAGENT 1	1-10	100	NO AMOUNT OF RESIDUE	0
ITEM 5	REAGENT 3	2-32	124	SMALLER AMOUNT OF RESIDUE (LESS THAN 100 TESTS' AMOUNT)	80
ITEM 10	REAGENT 1	1-5	130	OVER THE NUMBER OF DAYS OF USE	120
ITEM 18	REAGENT 1	1-3	129	EXPIRATION OF VALID TERM	120
ITEM 7	REAGENT 3	2-15	524	SMALLER AMOUNT OF RESIDUE THAN ONE DAY'S AMOUNT (THAN 400 TESTS' AMOUNT)	390

<STANDARD SOLUTION>

STANDARD SOLUTION NAME	POSITION	PRODUCTION NUMBER	ALARM DETAIL
STANDARD SOLUTION 0		10039	NO SETTING (Pos. 1-50)
STANDARD SOLUTION 2	55	10050	SETTING POSITION ERROR (Pos. 1-50)
STANDARD SOLUTION 1	12	10029	STANDARD SOLUTION SHORTAGE
STANDARD SOLUTION 3	15	10012	WITH DATA ALARM
STANDARD SOLUTION 9	47	10043	EXPIRATION OF VALID TERM

<CONTROL ANALYTE>

CONTROL NAME	POSITION	PRODUCTION NUMBER	ALARM DETAIL
CONTROL 1	10	10039	CONTROL ANALYTE SHORTAGE
CONTROL 3	18	10012	WITH DATA ALARM
CONTROL 9	7	10043	EXPIRATION OF VALID TERM

2171659

Kirby, Eades, Gale, Ba

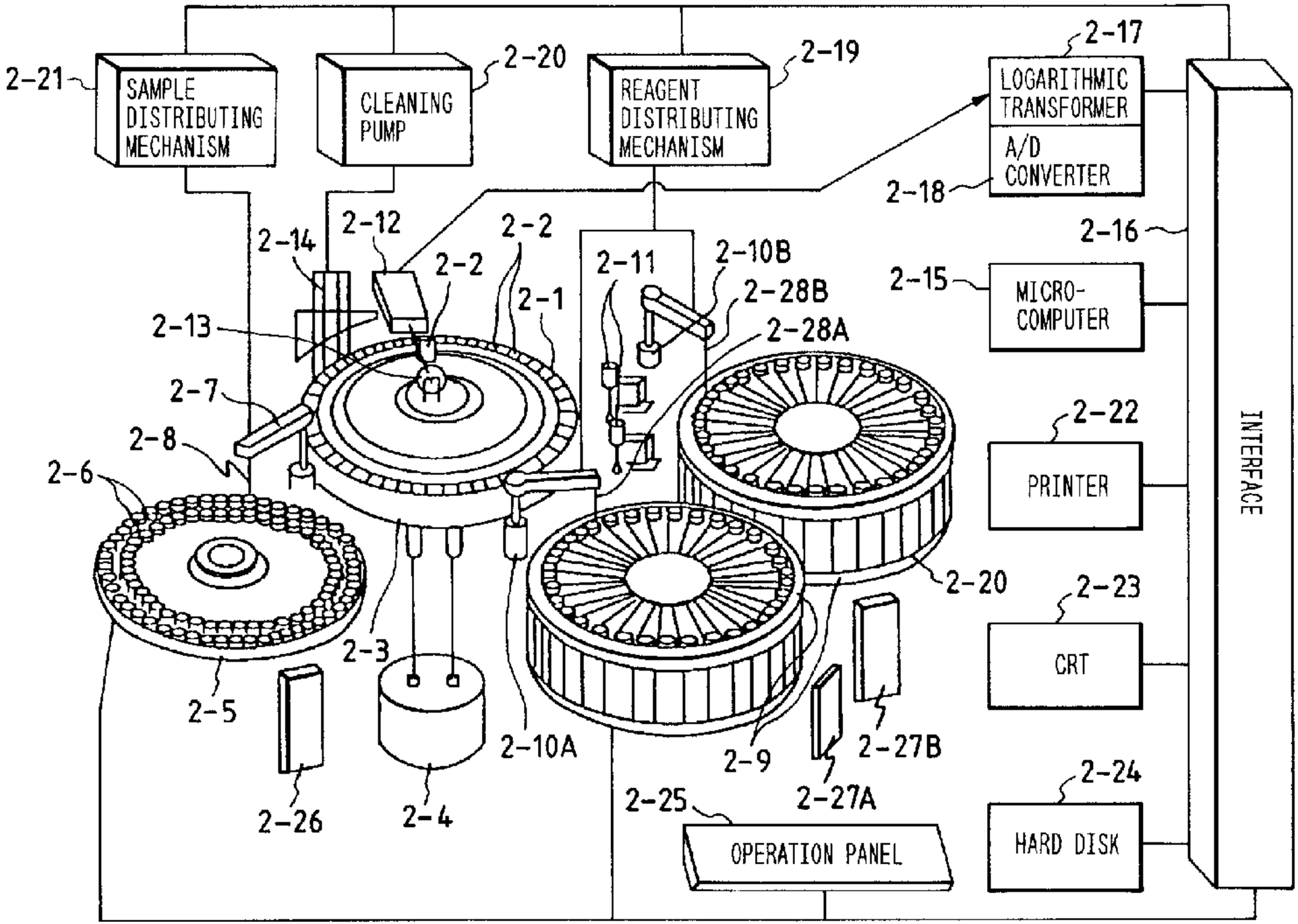
2-21
SAMPLE DISTRIBUTING MECHANISM
CLEANING PUMP
2-20
REAGENT DISTRIBUTING MECHANISM
2-19
2-17
LOGARITHMIC TRANSFORMER
A/D CONVERTER
2-18
2-16
2-15
MICRO-COMPUTER
2-22
PRINTER
2-23
CRT
2-24
HARD DISK
INTERFACE
2-14
2-12
2-2
2-2
2-1
2-11
2-10B
2-28B
2-28A
2-13
2-7
2-8
2-6
2-3
2-5
2-26
2-4
2-10A
2-9
2-27B
2-27A
2-25
OPERATION PANEL