Aug. 26, 1930. W. McKEE 1,774,392

APPARATUS FOR CONVEYING MAGNETIC MATERIAL

Filed Aug. 1, 1925 3 Sheets-Sheet 1

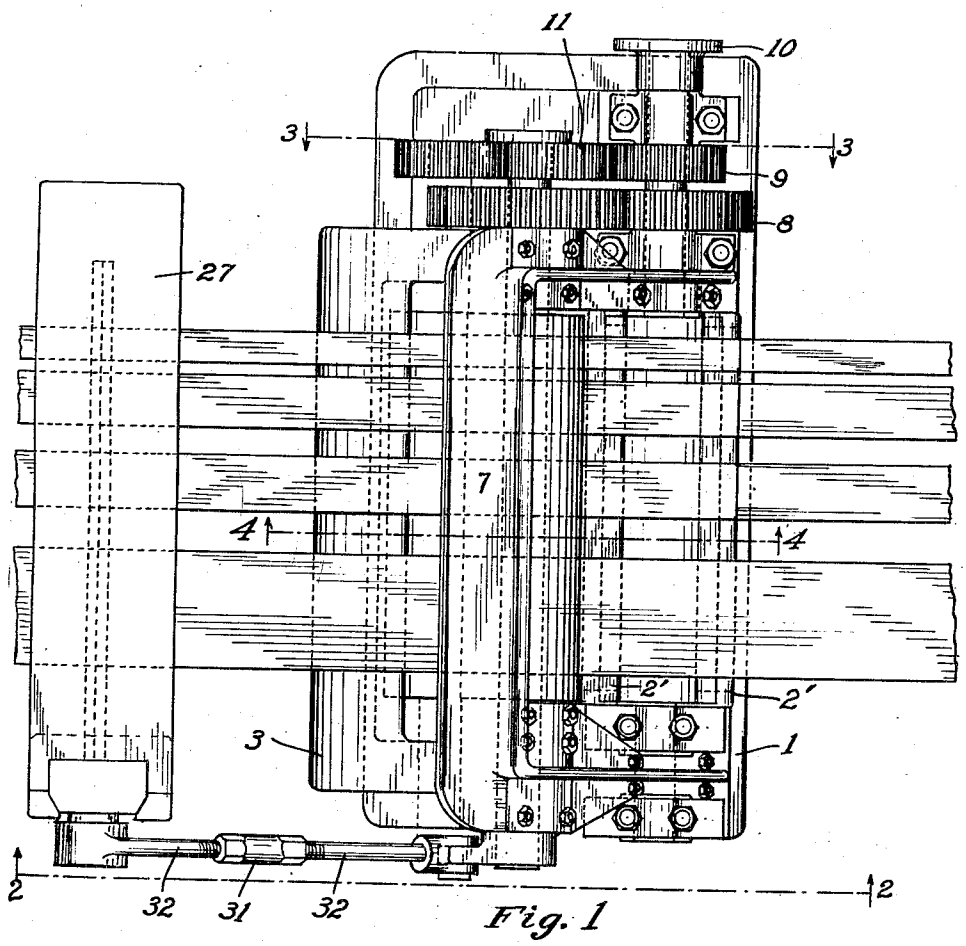

Fig. 1

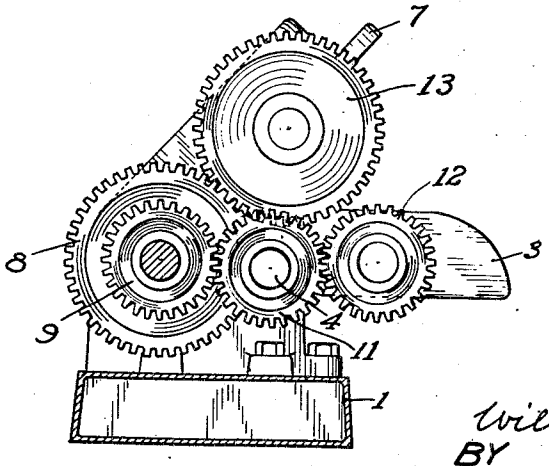

Fig. 3

INVENTOR
Willis McKee
BY
Richey, Slough & Watts
ATTORNEYS

Aug. 26, 1930. W. McKEE 1,774,392

APPARATUS FOR CONVEYING MAGNETIC MATERIAL

Filed Aug. 1, 1925 3 Sheets-Sheet 2

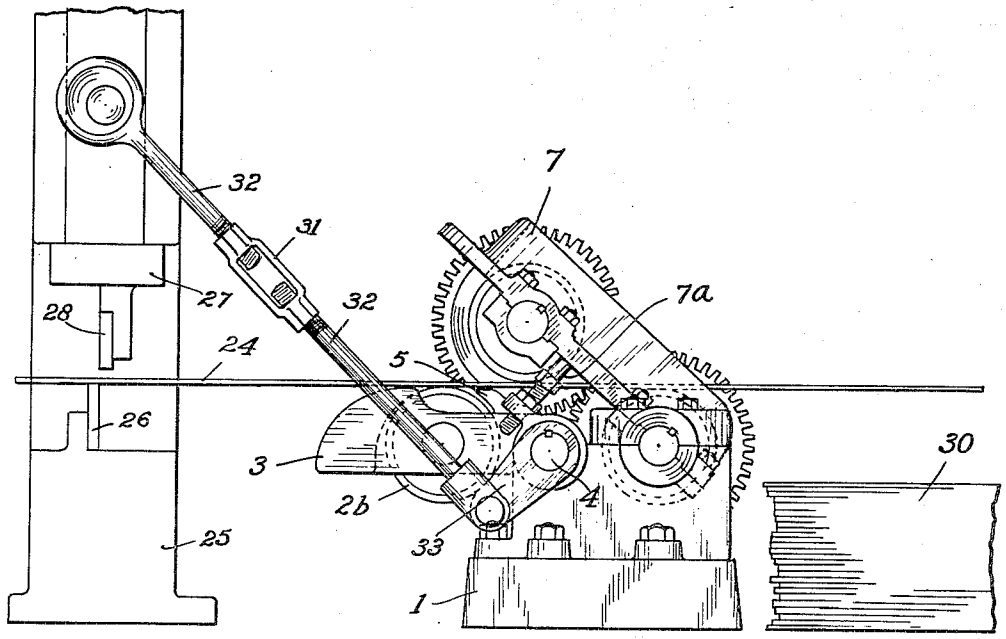

Fig. 2

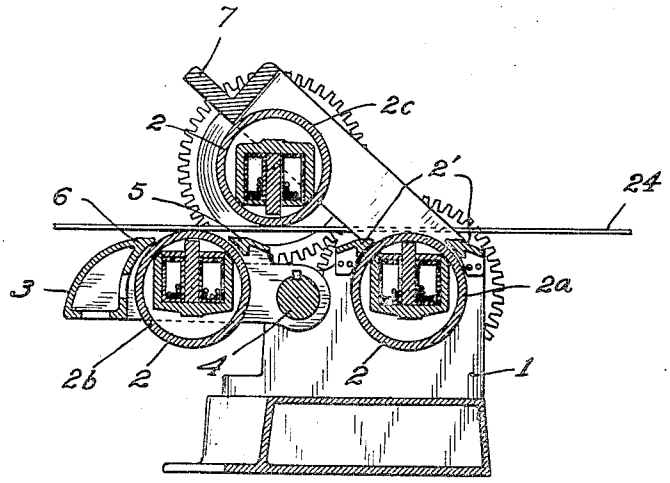

Fig. 4

INVENTOR
Willis McKee
BY
Richey, Slough & Watts
ATTORNEYS

Aug. 26, 1930. W. McKEE 1,774,392

APPARATUS FOR CONVEYING MAGNETIC MATERIAL

Filed Aug. 1, 1925 3 Sheets-Sheet 3

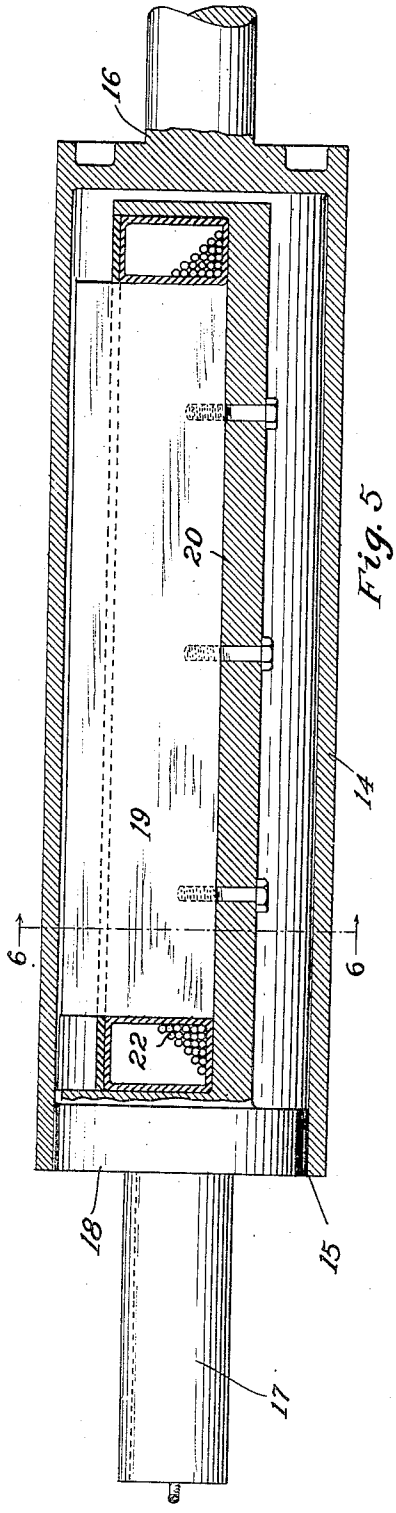

Fig. 5

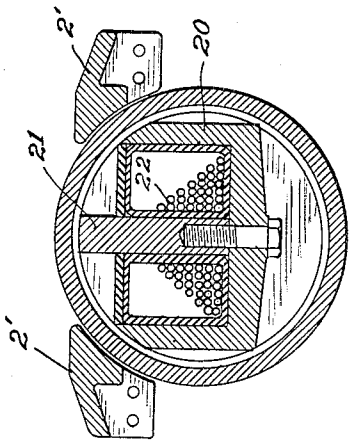

Fig. 6

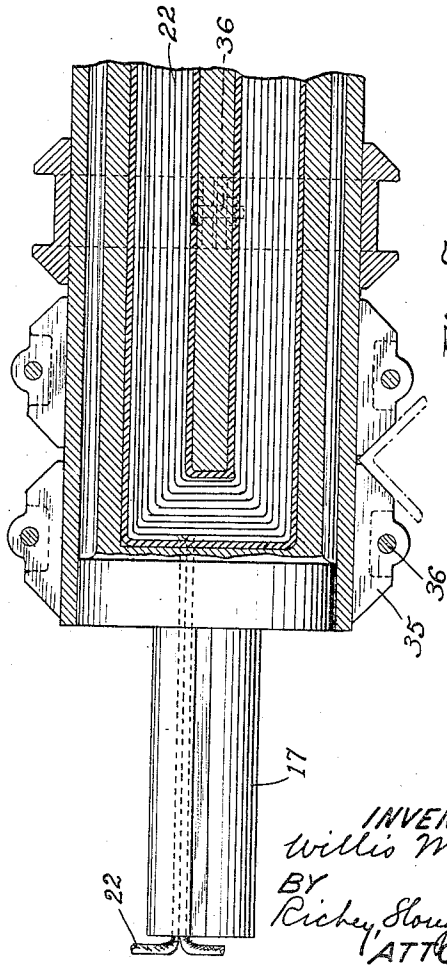

Fig. 7

INVENTOR
Willis McKee
BY
Richey, Slough & Watts
ATTORNEYS

Patented Aug. 26, 1930 1,774,392

UNITED STATES PATENT OFFICE

WILLIS McKEE, OF CLEVELAND, OHIO, ASSIGNOR TO CENTRAL NATIONAL BANK OF CLEVELAND

APPARATUS FOR CONVEYING MAGNETIC MATERIAL

Application filed August 1, 1925. Serial No. 47,490.

This invention relates to the art of conveying iron, steel and other magnetic articles in elongated form. It is more particularly concerned with a device, including rollers associated with each other and combined with suitable magnets, for conveying elongated magnetic articles.

One object of the invention is to construct a device for conveying magnetic articles in which the magnetic lines of force will be concentrated in the article being conveyed at all times with corresponding resulting high efficiency of the magnetic means.

In the drawings accompanying and forming a part of this specification:

Fig. 1 is a top plan view of one form of device embodying my invention;

Fig. 2 is an end elevation taken on line 2—2 of Fig. 1;

Fig. 3 is an end elevation, partly in section, taken on line 3—3 of Fig. 1;

Fig. 4 is a vertical section taken on line 4—4 of Fig. 1;

Fig. 5 is an enlarged detail view, partly in section, of one of the rollers and its magnet;

Fig 6 is a sectional view taken on line 6—6 of Fig. 5; and

Fig. 7 is a horizontal section of a roller equipped with one form of collars for conveying material which is angular in cross section.

Referring to the figures, it will be seen that I have provided means for conveying elongated magnetic articles which comprises a frame 1 and a plurality of substantially similar magnetic rollers 2. One of the rollers 2 is mounted in the frame 1 for rotational movement only, while the remaining rollers are suitably supported and connected to the frame for rotational movement and for vertical or up and down movement with respect to the frame and the other rollers and preferably about certain points in the frame. The roller which is mounted in the frame and has rotational movement only may, for convenience, be referred to as roller 2^a. Aprons 2′ are secured to the frame on either side of roller 2^a for a purpose presently to appear. Roller 2^b is preferably disposed in substantially the same horizontal plane with roller 2^a and is rotatably mounted in a U-shaped arm 3 which is supported on a shaft 4 carried by the frame 1. The arm 3 is preferably keyed to the shaft 4 so as to move up and down with respect to a line which coincides with the longitudinal center line of the shaft 4. The arm 3 is provided with an apron 5 extending between the sides of the arm adjacent to the roller 2^b, and at its outer end is also shaped to provide a similar apron-like structure 6. The purposes of these aprons will presently be described. The third roller 2^c is disposed above and between the rollers 2^a and 2^b and is carried rotatably in a substantially U-shaped arm 7, supported for vertical or up and down movement with respect to the roller 2^a, and preferably about the center line of roller 2^a, the extent of the downward movement of the roller 2^c being determined by the adjustable stops 7^a carried on the frame 1.

Roller 2^a is provided at one end with a large gear 8, a smaller gear 9, and a suitable coupling 10 by which a source of power may be joined with the roller 2^a to cause rotational movement thereof. The shaft 4 is provided with a small idler gear 11 which meshes with the gear 9. The roller 2^b is provided with a gear 12 which meshes with the gear 11. The roller 2^c is provided with a large gear 13 which meshes with the gear 8. Rotation of the roller 2^a and the gears 8 and 9 keyed thereto causes rotation of gears 13 and 11, the idler gear 11 in turn transmitting rotational movement from the gear 9 to the gear 12 which is keyed to the roller 2^b.

It will be understood from the foregoing description that gears 8 and 13 and gears 11 and 12 will always be properly in mesh regardless of the up and down movement or vertical position of the rollers 2^b and 2^c.

Since the rollers 2 are shown as being similar in construction, only one of these rollers will be described. The roller 2 preferably consists of a hollow shell or cylinder 14 composed of non-magnetic, metallic material and open at one end, as at 15, and provided at the opposite end with a supporting shaft 16 which constitutes the inner rotatable member of an antifriction bearing, the outer member of the bearing being composed of one or more fixed

cooperating parts supporting the inner member, for example, the frame 1 and suitable bearing caps. Opposite the open end of each roller 2 is disposed a cantilever shaft 17 which is preferably secured against rotation in its mounting and is provided with an enlarged portion 18 of substantially the same outside diameters as the inside diameter of the open end of the roller 14 so as to constitute the inner stationary member of an antifriction bearing, the outer rotatable member of which is the cylinder 14. Thus it will be seen that the roller 14 is supported at either end by antifriction bearings, the inner member of one bearing and the outer member of the other bearing being stationary.

It will be understood that the plain surface on the portion 18 of the steel shaft 17 may constitute a suitable bearing element for the roller 14 when the roller is composed of brass or other non-magnetic material suitable for bearings. Under other conditions, however, roller or ball bearings, bushings or other suitable bearing elements may be interposed between the shaft 17 and roller 14.

The shaft 17 supports a magnet 19 which overhangs in cylinder 14 of roller 2—that is, the support of the magnet is at one end thereof and entirely outside of the roller. This magnet, as shown, consists of a box-like member or container 20 having an upright, centrally disposed wall 21 and having electrically conductive windings 22 disposed within the member 20 and about the member 21. The poles of the magnet are disposed adjacent to the article being conveyed and so that the lines of force from the magnet may at all times pass through the articles being conveyed. Passage of electric current through the windings 22 will produce magnetic lines of force passing through member 21 and member 20 and the air gaps between the ends of these members. The aprons 2′, 5 and 6 serve as metallic conductors to cooperate with the magnet within the rollers and with the elongated metallic article 24 through which the magnetic lines of force may travel between the poles of the magnet and the articles being conveyed. It will be understood that the magnetic lines of force pass between the member or pole 20 and member or pole 21 through aprons 2′ or 5 and 6, and an article 24 on the roller. Lead out connections for the windings 22 may pass through a suitable hole in shaft 17. The non-magnetic cylinder or roller and the overhanging magnet cooperate to form a magnetic conveyor. By providing these aprons, I greatly decrease the air gaps and so materially increase the efficiency of the apparatus.

Apparatus of the foregoing description is of general use in conveying elongated magnetic articles and may be used as a part of a feed table, or to convey such articles from shears to a place where such articles are to be stacked, or may be employed in other arrangements and for other purposes. As shown in Figs. 1 and 2, it may advantageously be joined to a shear machine.

In these figures, numeral 25 indicates in outline the bottom or stationary element of a shear frame having a knife blade 26 and provided with a movable member or ram 27 carrying a knife blade 28 which cooperates with the knife 26 to shear elongated material into articles 24 of any desired length. 30 indicates a stack of such articles, which have been cut by the shears and conveyed from the shears and stacked by apparatus embodying my invention. The turnbuckle 31 and rods 32 connect the ram 27 with a crank arm 33 keyed to the shaft 4. On the downward movement of the member 27, which causes the knife blades 26 and 28 to shear the work blank and form an article 24, the rods 32 rotate the shaft 4 and thereby move arm 3 and roller 2^b downwardly below its normal horizontal position. This downward movement of roller 2^b accommodates the positioning of the article 24 while it is being sheared by the knife blades 26 and 28 and relieves the roller 2^b and its supports of the forces, which would otherwise be exerted thereon during such operation. It will be understood that with the article 24 extending between rollers 2^a and 2^c and with the roller 2^b movable downwardly, the sheared end of the article 24 can move downwardly without being bent over the roller 2^b and without exerting abnormal downward force thereon. Movement of the shear member 27 upwardly restores the roller 2^b to its normal horizontal position in engagement with the article 24.

Since the device embodying my invention is to convey articles of various sizes for which the tractive force necessary to move the articles is variable and since the magnets within the rollers 2^a and 2^b may sometimes be insufficient to create the necessary attraction between an article 24 and these rollers, I have provided means for increasing the tractive force on any given article to be conveyed, by which the tractive force will vary with the weight and magnetic capacity of the article.

This means includes the roller 2^c which has previously been described and which by reason of its construction and mounting cooperates with the other rollers and the article being conveyed to increase the tractive forces exerted on the latter. Any given article being conveyed by the illustrated device will exert forces on the rollers 2^a and 2^b equal to the sum of the forces of gravity acting on the article and the magnetic forces of magnets 19 in the rollers acting on the article. The top roller 2^c exerts a downward force upon the other rollers, which is equal to the weight of the roller and a percentage of the weight of the arm 7 plus a downward component of the forces in the arm 7. These latter forces

in the arm 7 are caused by the traction of the roller 2^c on the sheet or bar 24 tending to advance the material. This force tends to rotate the roller 2^c and its supporting arm 7 downwardly about the pivotal axis of the arm 7, which axis is ahead of and below the center of the roller 2^c, to produce a pinching action on the article 24 thereby increasing the traction of rollers 2^a, 2^b, and 2^c. In other words, to the gravitational and magnetic forces which cause the tractive force on the article 24 must be added a force caused by the roller 2^c being pulled down by a force which is the downward component of the forces in the arm 7. This component will vary with the tractive force of the roller 2^c. It will be understood that not only do the gravity forces vary with the weight of the article but also the magnetic forces vary with the size or capacity of the article for absorbing magnetic lines of force. Therefore, the tractive force, which is the product of the combined gravitational and magnetic forces and the coeffcient of friction, will vary with the weight of the article and its capacity to absorb magnetic lines of force.

In Fig. 7, I have shown a roller 2 provided with suitable means secured to the exterior thereof to accommodate articles angular in cross section. This means, as shown, consists of semi-circular, non-magnetic collars 35 secured together in clamping relation with the outer surface of the roller as by bolts 36 and nuts thereon. These collars 35 are spaced slightly apart lengthwise of the roller and are provided with inclined side surfaces shaped to conform to surfaces of the article to be conveyed, as clearly shown in this figure.

Having thus described my invention so that those skilled in the art may be enabled to practice the same, what I desire to secure by Letters Patent is defined in what is claimed, it being understood that the foregoing details of structure and description have been given for purposes of illustration only and not for the purpose of limiting the invention thereto.

What is claimed is:

1. Apparatus for conveying magnetic, metallic articles which include a hollow, non-magnetic roller shell, a cantilever member on which the shell is rotatably mounted, the member being fixedly supported outside of the shell, a multipolar magnet supported inside the shell by said member and extending lengthwise of the shell, and means for rotating the shell.

2. Apparatus for conveying magnetic, metallic articles which include a hollow, non-magnetic roller shell supported at both ends, a cantilever member fixedly supported outside of the shell, a multipolar magnet supported inside the shell by said member, and means for rotating the shell relative to the magnet.

3. Apparatus for conveying magnetic material which includes a hollow, non-magnetic roller shell, a cantilever member fixedly secured outside of the shell, a magnet supported inside the shell by said member, and having all its poles adjacent to the side of the shell with which material to be conveyed comes in contact, and means for rotating the roller.

4. Apparatus for conveying magnetic, metallic articles consisting of a non-magnetic roller shell with a magnet positioned therein the magnet having two poles, means for rotating said roller shell, and magnetic aprons positioned exteriorly of the roller shell, and between one pole of said magnet and parts of the articles to be conveyed, the magnetic flux passing from the other pole directly to the article.

5. Apparatus for conveying magnetic, metallic articles consisting of a non-magnetic roller shell with a magnet positioned therein the magnet having two poles, means for rotating said roller shell and magnetic aprons positioned in the path of the magnetic lines of force between one pole of said magnet and parts of the article to be conveyed, the magnetic flux passing from the other pole directly to the article.

6. Apparatus for conveying elongated magnetic, metallic articles, which includes a hollow, non-magnetic roller shell, a non-rotatable magnet within the roller shell and having a plurality of poles disposed transversely of the direction of travel of the articles being conveyed, cantilever means fixedly supported outside the roller shell for supporting the magnet concentrically with the shell, anti-friction bearing means associated with the said magnet supporting means and serving as a bearing for the open end of the said hollow roller shell, and means for rotating the roller shell.

7. Apparatus for conveying magnetic articles which includes a hollow, non-magnetic roller shell rotatably supported at one end, and open at the other end, a stationary shaft supported at one end, a bearing carried by the shaft and projecting into the open end of the shell and supporting the same and having bearing engagement with the inner walls thereof, a magnet disposed within the roller shell and carried by the shaft, and means for rotating the roller shell.

8. Apparatus for conveying magnetic articles which comprises a hollow, non-magnetic roller shell, stationary means for supporting the said shell, rigid cantilever means supported outside of the shell, a multipolar magnet carried by the said rigid means and disposed within the roller shell, and a bearing surface on the said rigid means for, and having bearing engagement with and supporting one end of the said shell.

9. Apparatus for conveying magnetic articles which includes a hollow roller shell of

non-magnetic material, a rigid cantilever member anchored outside of the said shell, a stationary multipolar magnet carried by the said member and disposed in the said shell, the said rigid member carrying a bearing concentric with and disposed within the said roller shell for supporting one end of the latter, and means for rotating the shell.

10. Apparatus for conveying magnetic articles which includes a hollow shell of non-magnetic material, a stationary magnet within the shell and having a plurality of poles, and antifriction bearings for supporting the shell composed of inner and outer members, the inner member of one bearing and the outer member of the other bearing being rotatable.

11. Apparatus for conveying elongated, magnetic articles which comprises a non-magnetic roller shell disposed in a horizontal plane for conveying magnetic articles on its top surface, a second non-magnetic roller shell disposed in a plane above the first said shell to rest on articles on the first said shell, and movable toward and away from articles on the first said shell, the second said shell being supported to pivot about a point below its own axis and in advance of the axis of the first said shell, magnets in the said shell, and means for rotating the shells simultaneously.

12. In an apparatus for conveying magnetic articles, a driven roller on which the articles to be conveyed are supported, a magnetic roller above and resting on the articles to be conveyed and means for increasing the tractive force of each roller on the articles when the magnetic roller is driven, said means including a mounting for the magnetic roller pivoted in advance of the roller and below the articles.

13. Apparatus for conveying elongated, magnetic articles which comprises a plurality of horizontally disposed rollers for conveying elongated magnetic articles on their top surfaces, means for supporting the rollers, one roller being movable vertically, the said roller shells being non-magnetic and provided interiorly with means for producing magnetically induced tractive forces of the articles on the rollers, and means for increasing the tractive forces of the articles on the said rollers, including a roller movable toward articles carried by the said rollers by the force of gravity and a component of forces in the support of the vertically movable roller.

14. Apparatus for conveying elongated magnetic articles which comprises a plurality of horizontally disposed rollers for conveying elongated magnetic articles on their top surfaces, the said rollers having non-magnetic shells and means therewithin for increasing their tractive force magnetically, and means for further increasing the tractive force of the articles on the rollers, including a roller supporting arm and a roller supported thereby, the roller being superimposed above said articles and movable towards the same by gravity, by a component of the force in the arm supporting said superimposed roller, and by magnetic attraction.

15. Apparatus for conveying elongated, magnetic articles which comprises a frame, a non-magnetic, article supporting shell in the frame, a yoke rotatable about the center line of the said shell and carrying a non-magnetic shell to rest on an article supported by the other shells, a shaft in the frame, a yoke rotatable about the center line of the shaft and carrying a non-magnetic, article supporting shell, gears on the shells and shaft for causing simultaneous rotation of all the shells, magnets disposed in the shells, means for limiting the up and down movement of the first said yoke, means for positively moving the second said yoke, and means for rotating the shells.

16. Apparatus for conveying magnetic articles which includes a hollow roller shell to engage magnetic articles to be conveyed and composed of non-magnetic material, a magnet having two poles and being disposed within the roller shell and magnetic conducting means interposed in the path of the magnetic lines of force between one pole of the said roller shell and part of an article engaging the same, the magnetic flux passing from the other pole directly to the article.

17. Apparatus for conveying magnetic articles which includes a hollow non-magnetic roller shell to engage magnetic articles to be conveyed, a stationary magnet, comprising a central pole surrounded by another pole and disposed within the shell with the ends exposed to articles to be conveyed, rigid means supported outside the shell and carrying the magnet within the shell, lead out connections extending from the magnet through the rigid means and means for rotating the shell.

18. Apparatus for carrying elongated, magnetic articles which comprises a roller on which articles are to be conveyed, and means above the said roller for increasing the downward pressure on articles on the said roller in proportion to the magnetic capacity of the article to be conveyed, and to the motion of the article, said means including a magnetic roller supported for pivotal movement on an axis below its own axis and in advance of the axis of the first said roller.

19. Apparatus for conveying elongated, magnetic articles which comprises a roller on which articles are to be conveyed, and means above the said roller for increasing the downward pressure on articles on the said roller in proportion to the magnetic capacity of the article to be conveyed, the said means including a magnetic roller pivotally carried on pivot means disposed in advance of and below

its own axis, the said magnetic roller being movable against the article to be conveyed by the force of gravity, and by a component of the force in the roller carrying means.

20. Apparatus for conveying elongated, magnetic articles which comprises a plurality of driven rollers provided with magnets, certain of the rollers supporting an article to be conveyed, one of the rollers engaging the upper part of the article to be conveyed, and means carrying the last said roller, the said roller and carrying means pivotally mounted forwardly of and below the axis of the last said roller and being so disposed as to exert on the article of their weight, a component of the forces in the carrying means, and the magnetic attraction between the last said roller and the article.

21. Apparatus for conveying elongated magnetic articles which comprises a non-magnetic roller shell disposed in a substantially horizontal plane for conveying articles on its top surface, a second non-magnetic roller shell disposed above the first said shell to rest on articles on the first said shell, means carrying the second said shell, the said means being pivoted in advance of the said shell carried thereby and below the article on which the roller is adapted to rest, magnets in each of the shells, and means for rotating the shells.

22. Apparatus for conveying magnetic metallic articles which include a hollow non-magnetic roller shell, a magnet in the shell, a cantilever member fixedly supported outside the shell and carrying the magnet, said magnet comprising a central pole, a coil surrounding said pole, and another pole surrounding the said coil, the terminals of the said poles being adjacent to the material transporting side of the said shell, and means for rotating the shell.

23. Apparatus for conveying magnetic metallic articles which includes a hollow non-magnetic roller shell, a magnet within the shell, a cantilever member fixedly supported outside the said shell and carrying the said magnet at its inner end, said magnet comprising elongated, central and outer poles with a coil surrounding the central pole, the terminals of the said poles being adjacent to the material transporting side of the said shell, and means for rotating the said shell.

24. Apparatus for conveying magnetic metallic articles which includes a hollow non-magnetic roller shell, a magnet within the shell, a supporting member carrying the magnet and being fixedly supported outside the shell, said magnet extending approximately the full length of the interior of the shell and comprising an elongated central pole, a coil surrounding the same, and an elongated outer pole surrounding the central pole and carrying the said coil therewithin, the terminals of the said poles being adjacent to the material transporting side of the said shell and means for rotating the said shell.

25. A magnetic roller for conveying elongated magnetic metallic articles which comprises a non-magnetic hollow shell rotatably supported at one end thereof, a magnet within the shell, and having a plurality of poles and a cantilever member concentric with the shell fixedly supported at one end outside of the other end of the shell and carrying the said magnet in the shell.

26. A magnetic roller for conveying elongated magnetic metallic articles which comprises a non-magnetic hollow shell rotatably supported at one end thereof, a magnet within the shell, and having a plurality of poles and a cantilever member fixedly supported at one end outside of the shell and carrying the said magnet in the shell, the said member serving as a support for the other end of the shell.

27. A magnetic roller for conveying elongated magnetic metallic articles which comprises a non-magnetic hollow shell rotatably supported at one end thereof, and a stationary magnet within the shell and out of contact therewith, said magnet having elongated poles extending lengthwise of the shell along the portion thereof carrying the articles being conveyed and transversely of the direction of travel of articles conveyed by the roller.

28. A magnetic roller for conveying metallic articles which comprises a non-magnetic shell across which magnetic articles are to be conveyed and a multipolar magnet within the shell of such size and shape as to produce substantially equal flux density at adjacent points across the line of travel of the articles on the shell.

29. A roller for conveying magnetic articles thereacross comprising a non-magnetic shell and a magnet therewithin having poles positioned across the line of travel of magnetic articles on the shell and of such size and shape as to cause the articles to move across the roller substantially without side travel due to action of the magnet.

In testimony whereof I hereunto affix my signature this 27th day of July, 1925.

WILLIS McKEE.