Jan. 2, 1923. 1,440,853

G. VanDAAM.
FUEL SAVING DEVICE.
FILED MAY. 18, 1921.

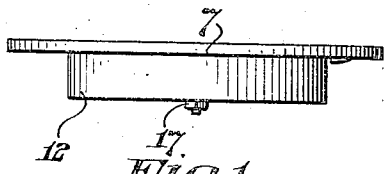

Fig. 1.

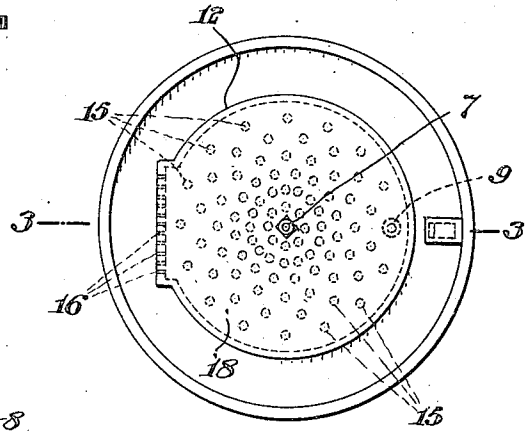

Fig. 2.

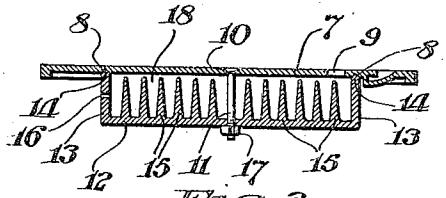

Fig. 3.

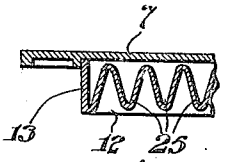

Fig. 4.

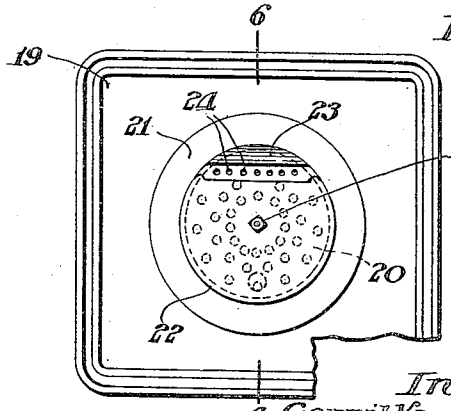

Fig. 5.

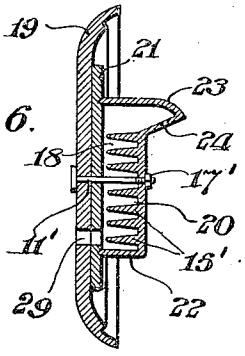

Fig. 6.

Inventor:
Gerrit Van Daam,
By McCordale
Attorney.

Patented Jan. 2, 1923. 1,440,853

UNITED STATES PATENT OFFICE.

GERRIT VAN DAAM, OF BUFFALO, NEW YORK.

FUEL-SAVING DEVICE.

Application filed May 18, 1921. Serial No. 470,539.

To all whom it may concern:

Be it known that I, GERRIT VAN DAAM, a citizen of the United States, residing at Buffalo, in the county of Erie, State of New York, have invented a new and useful Fuel-Saving Device, of which the following is a specification.

My invention relates to fuel saving devices. The object is to provide improved means for preheating the air that is delivered to the combustion chamber, especially over the fuel bed, in order that said preheated air may facilitate the combustion of the fuel and of the gases generated thereby, without chilling or damping the fire. In this way great saving is accomplished, procuring a thorough combustion of the gases that ordinarily escape to the chimney flue. A greater heat is derived from said combustion and thus a saving of the fuel is secured.

The essence of the invention consists in providing a maximum of highly heated surface with which the air must contact, as it passes from the inlet to the discharge vents.

Referring to the drawings which illustrate merely by way of example a suitable embodiment of my invention:

Fig. 1 is a side elevation of a stove lid containing my invention.

Fig. 2 is a plan view of the underside of same.

Fig. 3 is a section on line 3—3 of Fig. 2.

Fig. 4 is a fragmentary section showing alternative structure.

Fig. 5 is a plan view of the inner side of a furnace door containing my invention.

Fig. 6 is a section on line 6—6 of Fig. 5.

Similar numerals refer to similar parts throughout the several views.

Referring to Figs. 1 to 4 inclusive, the top element 7 of the stove lid is preferably provided with the annular groove 8, the air intake opening 9 and the central opening 10 for the bolt 11. The under element 12 is provided with the peripheral rim or flange 13 having its upper margin 14 tapered or otherwise suitably formed to cooperate with the groove 8 as shown. That is to say, the groove 8 and cooperating margin 14 may be wedge-shaped or curved, or provided with parallel walls as may be most convenient or desirable. The lower or inner wall of element 12 is provided with a plurality of formations 15, evenly spaced and projecting into close proximity with the under side of the top element 7. In Fig. 4 these formations 15′ are shown hollow, as at 25, which adds to the heating effect upon the chamber or space 18. One of the vertical walls of element 12 is provided with a plurality of discharge vents 16, located at a point remote from the air intake opening 9.

In assembling the device it is only necessary to seat the edge or rim 14 of the under element 12, in the annular groove 8 of the top element 7 and then secure the two elements together in any suitable way, as for example by means of the bolt 11 and the nut 17.

In operation, the device is adapted to be placed in one of the stove or range openings directly over the fire. The element 12 thus becomes highly heated. This heat is communicated to the formations 15 thereby heating to a high degree of efficiency the air contained in the chamber or space 18, as it passes from inlet 9 to the outlet vents 16. This serves to supply an ample supply of highly heated fresh air to the combustion chamber and thus greatly facilitates the combustion of the fuel and fuel gases therein.

Figs. 5 and 6 show a similar device applied to a furnace door; 19 being the door proper, while the preheating chamber 20 may be formed of an integral structure or by an inner element 21 and an outer element 22 as shown. In this device I have shown the inlet opening 29 near the lower side of the door 19 and element 21, while element 22 is provided with a projecting portion 23 overhanging the balance of element 22, and having the discharge vents 24 directed downwardly into the combustion chamber.

The elements are assembled and held together in a similar way as that described with respect to Figs. 1 to 4. It will be obvious that other suitable means may be employed for securing the elements.

The air entering intake 29, passes upwardly among the formations 15′, thereby becoming thoroughly heated, discharges inwardly and downwardly into the combustion chamber.

It will be obvious that the projections or formations 15′ may be formed in a number of different ways without departing from the spirit of the invention, the essence of which being that the air must traverse the entire extension of the chamber and pass over a maximum of heating surface, from the intake to the discharge vents.

What I claim is:—

1. In a fuel saving device, in combination with a combustion space, a chambered body having a wall adjacent the fire provided with a plurality of separated tapered formations projecting with their axes at right angles to the plane of said wall and terminating close to the opposite wall thereof, means forming an air inlet to said chambered body, and means forming an air discharge from said chambered body into the combustion space at a point removed from said inlet.

2. In a fuel saving device, in combination with a combustion space, a chambered body having a wall adjacent the fire provided with a plurality of integral tapered formations projecting with their axes at right angles to the plane of said wall and terminating close to the opposite wall thereof, means forming an air inlet to said chambered body, and means forming an air discharge from said chambered body into the combustion space at a point removed from said inlet.

3. In a fuel saving device, in combination with a combustion space, a chambered body having a wall adjacent the fire provided with a plurality of separated tapered formations projecting with their axes at right angles to the plane of said wall and terminating close to the opposite wall thereof, means forming an air inlet to said chambered body, and means forming an air discharge from said chambered body into the combustion space at a point removed from said inlet, said chambered body formed of grooved plates with connecting elements for cooperating with said grooves.

4. In a fuel saving device, in combination with a combustion space, a chambered body having a wall adjacent the fire provided with a plurality of separated tapered formations projecting with their axes at right angles to the plane of said wall and terminating close to the opposite wall thereof, means forming an air inlet to said chambered body, and means forming an air discharge from said chambered body into the combustion space at a point removed from said inlet, said chambered body formed of plates, one of which is provided with an integral post forming part of the connecting mechanism for another plate.

5. In a fuel saving device, in combination with a combustion space, a chambered body having a wall adjacent the fire provided with a plurality of separated tapered formations projecting with their axes at right angles to the plane of said wall and terminating close to the opposite wall thereof, means forming an air inlet to said chambered body, and means forming an air discharge from said chambered body into the combustion space at a point removed from said inlet, said chambered body formed of plates, one of which is provided with an integral post threaded at its free end as means for securing thereto another plate.

GERRIT VAN DAAM.