April 26, 1955 D. A. GRIGGS 2,706,821

MATTRESS

Filed April 7, 1952

Fig. 1.

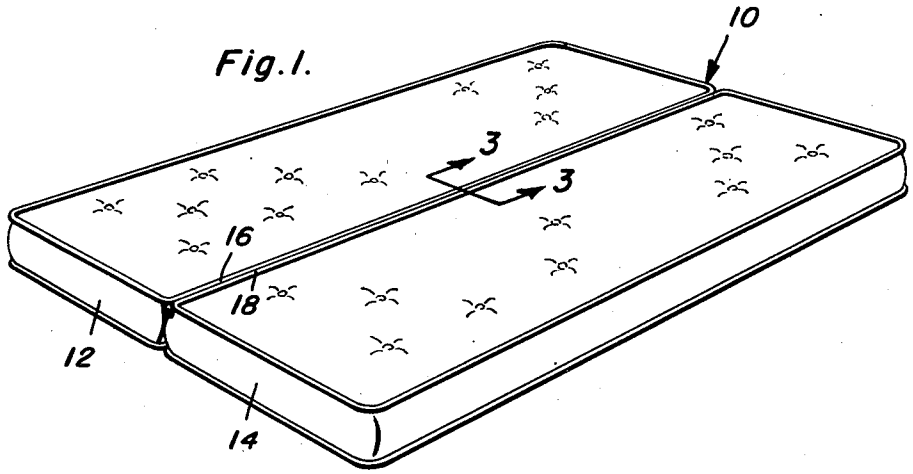

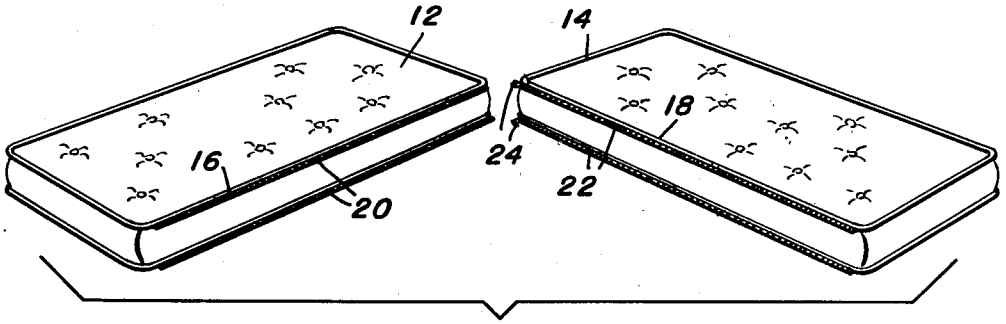

Fig. 2.

Fig. 3.

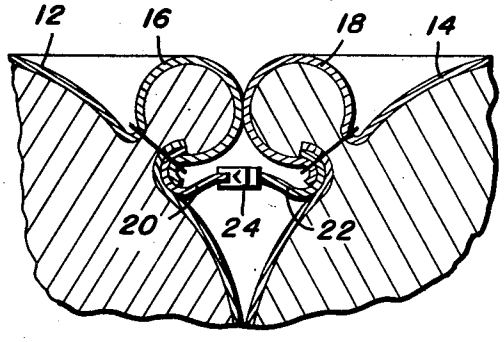

Dwight A. Griggs
INVENTOR.

BY Clarence A. O'Brien and Harvey B. Jacobson
Attorneys

United States Patent Office 2,706,821 Patented Apr. 26, 1955

2,706,821

MATTRESS

Dwight A. Griggs, Braintree, Mass.

Application April 7, 1952, Serial No. 280,940

1 Claim. (Cl. 5—357)

This invention relates in general to mattresses, and more particularly to mattresses formed of a plurality of sectional mattresses.

The primary object of this invention is to provide an improved mattress for a double bed which may be easily divided into two mattresses for use on twin-size beds.

Another object of this invention is to provide an improved mattress which is formed of a pair of similar sectional mattresses which are secured together along longitudinal edges, said sectional mattresses being of different type constructions as desired by the individual sleepers on opposite sides of a double bed.

Another object of this invention is to provide an improved sectional mattress which may be secured to a similar sectional mattress to form a mattress for a double bed, said sectional mattresses being quickly detachable from each other whereby they may be easily handled by people including housewives.

Another object of this invention is to provide an improved mattress which is formed in two sections whereby one section may be quickly replaced upon damage thereto and thereby saving the owner of a damaged mattress the cost of replacing the entire mattress.

A further object of this invention is to provide an improved mattress which is formed of two sectional mattresses secured together along longitudinal abutting edges by conventional fasteners such as slide fasteners, the joints between the sectional mattresses being concealed by longitudinal beadings along the opposed edges of the sectional mattresses, said beadings forming a portion of the mattress surface so as to prevent an undesirable depression between the two sectional mattresses.

With these objects definitely in view, this invention resides in certain novel features of construction, combination and arrangement of elements and portions as will be hereinafter described in detail in the specification, particularly pointed out in the appended claim, and illustrated in the accompanying drawings which form a material part of this application, and in which:

Figure 1 is a perspective view of the improved mattress, which is the subject of this invention, the mattress being formed of two sectional mattresses joined together along the longitudinal edges;

Figure 2 has an exploded perspective view on a reduced scale of the mattress of Figure 1 and showing the two sectional mattresses disconnected; and

Figure 3 is an enlarged fragmentary transverse vertical sectional view taken substantially upon the plane indicated by the section line 3—3 of Figure 1 and showing the manner in which the two sectional mattresses are secured together at their upper edges.

Similar characters of reference designate similar or identical elements and portions throughout the specification and throughout the different views of the drawings.

Referring now to the drawings in detail, it will be seen that there is illustrated in Figure 1 the dual purpose mattress, which is the subject of this invention, the mattress being referred to by the reference numeral **10**. The mattress **10** is formed of two one-half size sectional mattresses **12** and **14** which are secured together along opposed longitudinal edges. As is best illustrated in Figure 2, the sectional mattresses **12** and **14** are independent units which may be disconnected from each other and utilized with twin-size beds or may serve as cot or bunk mattresses.

Referring now to Figure 3 in particular, it will be seen that the sectional mattresses **12** and **14** are provided with beadings **16** and **18** along their upper opposed longitudinal edges which are in engagement when the two sectional mattresses are secured together so as to prevent the formation of a depression between the two sectional mattresses at their point of joining. Secured to the sectional mattress **12** by the joint forming the beading **16** is a first half section **20** of a slide fastener which is adapted to be connected to a second half **22**. The second half section **22** is secured to the sectional mattress **14** by the joint forming the beading **18**. The separate halves **20** and **22** are interlocked by a conventional slide **24** carried by one of the slide fastener halves **20** and **22** and so as to lie directly beneath said beadings **16**, **18** to be hidden thereby and support the same.

It will be understood that the lower opposed longitudinally extending edges of the sectional mattresses **12** and **14** are provided with a construction identical with the construction at the upper opposed longitudinally extending edges. While the fastening means for securing the sectional mattresses **12** and **14** together to form the mattress **10** has been illustrated and described as being slide fastener constructions, it will be understood that it is not intended to so limit the invention. If desired, the fastening means may also be in the form of snaps, buttons or laces. In any event, the fasteners will be disposed beneath the beadings **16** and **18** and concealed thereby.

The forming of a large mattress of two single sections not only permits the ease of handling the mattress, but also necessitates the replacement of one-half only in the event that one of the halves of the mattress **10** should be damaged. Furthermore, a mattress for a double bed formed in two halves by joining together sectional mattresses along their longitudinal edges permits two sleepers, such as husband and wife in a single bed to have mattresses of a construction of their own choosing. For example, one-half of the mattress **10** could be a rubber foam sectional mattress and the other half could be a hair sectional mattress. While this is only one example of a plurality of mattress combinations, it will be understood that the sectional mattresses **12** and **14** will be constructed in the normal manner and that the store selling the mattress **10** may make up any type desired for their patrons.

The operation of this device will be understood from the foregoing description of the details thereof, taken in connection with the above recited objects and drawings. Further description would appear to be unnecessary.

Minor modifications of the device, varying in minor details from the embodiment of the device illustrated and described here, may be resorted to without departure from the spirit and scope of this invention, as defined in the appended claim.

Having described the invention, what is claimed as new is:

A bed mattress comprising a pair of mattress sections having longitudinal opposed sides provided with a pair of opposed longitudinal upper edge beadings, and slide fastener means securing said sides together with the beading on each section engaging the beading on the other section comprising a pair of opposite interlocking fastener sections extending along said sides, and a slide member on said fastener sections for interlocking the same, said fastener sections being secured to said sides at the juncture of said beadings and said sides and directly beneath said beadings to be hidden thereby and extending into said beadings to support said beadings.

References Cited in the file of this patent

UNITED STATES PATENTS

195,850	Shepherd	Oct. 2, 1877
540,112	Rude	May 28, 1895
2,097,475	Silberman	Nov. 2, 1937
2,107,205	McLendon	Feb. 1, 1938
2,247,667	Rosberger	July 1, 1941
2,629,111	Korney	Feb. 24, 1953