May 23, 1967 J. B. QUINLAN ET AL 3,320,887

COMBUSTIBLE PRIMER PLUG

Filed Aug. 3, 1965

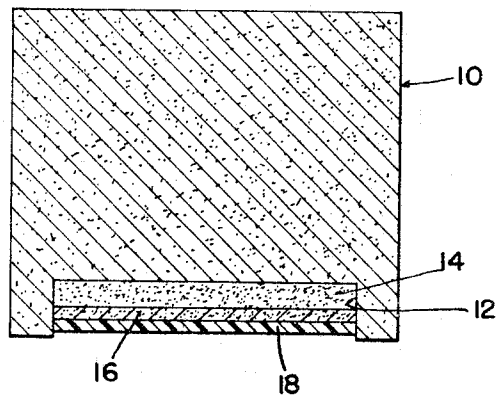

Inventor

JOSEPH B. QUINLAN
JOHN J. SCANLON JR,

By Harry M. Saragovitz,
Edward J. Kelly, Herbert Berl
& S. Dubroff

Attorneys

United States Patent Office

3,320,887

Patented May 23, 1967

3,320,887

COMBUSTIBLE PRIMER PLUG

Joseph B. Quinlan, Philadelphia, Pa., and John J. Scanlon, Jr., Willingboro, N.J., assignors to the United States of America as represented by the Secretary of the Army

Filed Aug. 3, 1965, Ser. No. 477,046
3 Claims. (Cl. 102—45)

ABSTRACT OF THE DISCLOSURE

A primer plug, for use in the rearward portion of a round of caseless ammunition, having its primer mix and propellant disc protected from the heat of the firing pin, by a thermal seal.

The invention described herein may be manufactured and used by or for the Government for governmental purposes without the payment to us of any royalty thereon.

The invention relates to a combustible primer plug for caseless ammunition and more particularly to a combustible primer for caseless ammunition having a thermal seal.

In the past, primer plugs have contained a primer mix and a propellant seal. This construction has proved operational when the caseless cartridge has been used in single-shot firings. But, when used in a machine gun, during automatic firing in long burst, the firing pin reached a temperature so high that the heat from said firing pin ignited the cartridge before it was properly seated in the chamber thereby causing malfunctioning of the machine gun.

The invention solves this problem by providing a mica thermal seal along with the propellant disc and primer mix in a primer plug. This mica thermal seal prevents the heat from a hot firing pin from pre-igniting the primer.

It is therefore an object of the invention to provide a primer plug that will not be pre-ignited by a hot firing pin.

Another object of the invention is the provision of a caseless cartridge that can be successfully fired from an automatic gun in long burst.

The above objects as well as others together with the benefits and advantages of the invention will be apparent upon reference to the detailed description set forth below, particularly when taken in conjunction with the drawing annexed hereto in which a primer plug is indicated generally by reference numeral **10**. Said primer plug **10** is made from molded propellant and fits in the rear portion

of a molded caseless cartridge (not shown). Said primer plug **10** has a pocket **12**, located in the rearward portion thereof, which contains a primer mix **14**. The function of the primer mix **14** is to initiate the combustible plug **10** and then the caseless cartridge (not shown). After the primer mix **14** is inserted in the pocket **12**, a propellant disc seal **16** is placed on top of said primer mix **14** to hold it in place and to provide a combustible material that will completely burn. A mica thermal seal **18** is then secured on top of the propellant disc seal **16** thereby protecting same from a hot firing pin tip (not shown) during automatic firing in long burst. It has been found that, in a caseless machine gun, a burst greater than sixteen rounds cannot be obtained without a mica thermal seal.

Obviously many modifications and variations of the present invention are possible in the light of the above teachings. It is therefore to be understood, that within the scope of the appended claims, the invention may be practiced otherwise than as specifically described.

We claim:

1. A combustible primer plug for caseless ammunition comprising a molded propellant, a pocket in said molded propellant, a primer mix secured in said pocket for initiating said molded propellant, a combustible means for holding said primer mix in said pocket, and a thermal seal secured on top of said combustible means.

2. A combustible primer plug for caseless ammunition comprising a molded propellant, a pocket in said molded propellant, a primer mix secured in said pocket for initiating said molded propellant, a combustible means for holding said primer mix in said pocket, and a mica thermal seal secured on top of said combustible means.

3. A combustible primer plug for caseless ammunition comprising a molded propellant, a pocket in said molded propellant, a primer mix secured in said pocket for initiating said molded propellant, a combustible disc seal for holding said primer mix in said pocket, and a mica thermal seal secured on top of said combustible disc seal.

References Cited by the Examiner

UNITED STATES PATENTS

3,187,671 6/1965 Quinlan et al. ---------- 102—43

OTHER REFERENCES

"Materials" in Design Engineering, vol. 60, No. 5, October 1964, p. 339.

SAMUEL FEINBERG, *Primary Examiner.*

ROBERT F. STAHL, *Examiner.*