May 23, 1950 C. C. BAUERLEIN 2,509,124

DISPENSER MECHANISM

Filed June 21, 1945

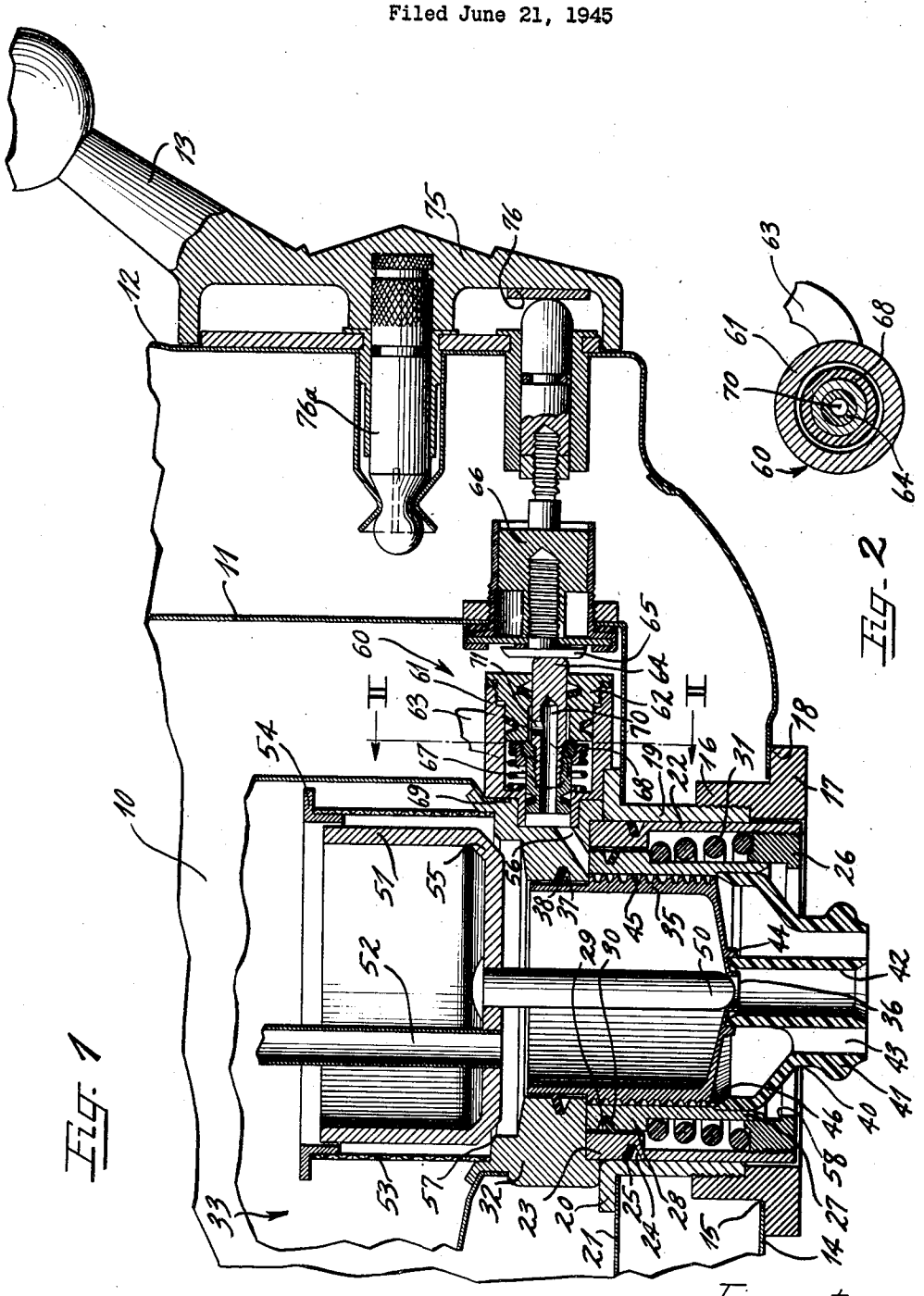

Fig. 1

Fig. 2

Inventor
Carl C. Bauerlein

by The Firm of Charlesw Hills Attys.

Patented May 23, 1950

2,509,124

UNITED STATES PATENT OFFICE

2,509,124

DISPENSER MECHANISM

Carl C. Bauerlein, Glencoe, Ill., assignor to The Dole Valve Company, Chicago, Ill., a corporation of Illinois

Application June 21, 1945, Serial No. 600,780

3 Claims. (Cl. 225—21)

1

This invention relates to dispensing apparatus and more particularly to a dispensing nozzle structure of a dispenser for beverages of the carbonated type.

An object of this invention is to provide a simple and more compact dispensing mechanism especially adapted for use in the dispensing of several fluids together such for example as carbonated syrups and the like.

Still another object of the invention is to provide in a dispenser of the type for dispensing several fluids together, a valve mechanism so closely associated with the dispensing nozzle that after the flow of fluid to the mechanism has been shut off a minimum amount of fluid will be available for subsequent drippage through the nozzle.

A further aim of this invention is to minimize in a dispenser the amount of drippage that may occur after the shutting off of the valve mechanism controlling the dispensing of fluid from the nozzle.

In accordance with the general features of this invention there is provided in a dispenser a nozzle, a cup closely associated therewith for supplying fluid thereto, a sleeve closely embracing the outer wall of the cup, a passageway leading to the space between the cup and the sleeve and a valve mechanism in close proximity to the sleeve for controlling the flow of fluid through the passageway.

Another feature of the invention relates to the utilization of the same valve mechanism for not only controlling the flow of fluid through the sleeve but also for controlling the flow of the other fluid from the cup of the dispenser.

A further feature of the invention relates to the provision of a novel valve mechanism for use with a dispenser nozzle especially adapted for the dispensing of several fluids, such as carbonated syrups and the like.

Other objects and features of this invention will more fully appear from the following detail description taken in connection with the accompanying drawings which illustrate a single embodiment thereof and in which:

Figure 1 is a fragmentary sectional view taken through the lower part of a dispenser and showing the essential features of this invention; and

Figure 2 is a cross-sectional view taken on the line II—II of Figure 1 looking in the direction indicated by the arrows and showing more in detail the construction of the valve mechanism.

As shown on the drawings:

The reference character 10 designates generally the housing of any suitable construction and which includes a main front wall 11 and a false front wall 12 spaced from the wall 11 and which carries the manually operable handle 13 for controlling the dispensing of fluid from the device.

2

The bottom 14 of the housing has an opening 15 telescoped by a skirt 16 of a sleeve 17 which has an enlarged outer shoulder 18 for embracing the underside of the wall around the opening 15. Threaded into the skirt 16 of the sleeve 17 is an upwardly extending tubular sleeve 19 having a shouldered upper end 20 and which extends through an opening in an interior bottom wall 21 of the housing. The shoulder 20 engages the top side of the bottom wall 21 around the opening therein so that by tightening the sleeve 19 in the sleeve 17 it is possible to draw the two together in tight cooperation with their respective walls 14 and 21. Both of the sleeves may be of a circular cross-section and their flanged ends 18 and 20 may, if it is so desired, be provided with wrench flats for turning the same.

Concentric with and disposed within the sleeves 17 and 19 is an inner sleeve 22 having an enlarged upper end 23 provided with an outer groove 24 in which is a rubber or synthetic plastic flap type gasket 25 for providing a seal-tight fit between the sleeve 29 and the sleeve 19. The lower extremity of the sleeve 22 is threaded on its inner surface so as to have screwed therein a retainer ring 26.

Also concentric with and disposed within the sleeve 22 is a further inner sleeve 27 having an enlarged head 28 at its upper end engaging the enlarged upper end 23 of the sleeve 22. This enlarged upper end or head 28 of sleeve 27 is provided on its outer surface with a groove 29 in which is disposed a flap gasket 30 similar to gasket 25. This gasket provides a seal-tight fit between the two enlarged ends 23 and 28 of the sleeves 22 and 27.

Disposed between the lower portions of these two sleeves 22 and 27 is a conical-like compression spring 31 the lower coil of which abuts the closure ring 26 and the upper coil of which abuts the shoulder of the enlarged upper end 28 of the sleeve 27. This spring 31 serves to force the sleeve 27 upwardly against the lower end of the bottom 32 of a dispenser container 33.

Positioned within the sleeve 27 is a cylindrical fluid or syrup holding cup 35 having its bottom wall provided with a central opening 36. The upper end of the cup 35 is formed open and communicates with the interior of the fluid con-

tainer 33 of the dispenser in which fluid such as syrup is contained. It should be noted that the bottom ring 32 of the container is provided with a groove 37 in which is disposed a flap type rubber or plastic gasket 38 for establishing a seal between the upper end of the cup 35 and the wall of the bottom 32 and embracing the upper end of the cup.

Secured in the lower end of the sleeve 27 is a nozzle which may be made of any suitable material such for example as synthetic plastic and which is designated generally by the reference character 40. The nozzle is provided with an outer plastic tube 41 and an inner plastic tube 42 secured to the outer tube at spaced intervals by webs or vanes 43.

The central tube 42 is aligned with the bottom orifice 36 in the cup 35 and is seated inside of an annular rib 44 formed in the bottom of the cup. The outer tube 41 is tightly seated inside the lower extremity of the sleeve 27 and is in direct communication with a space between the wall of the cup 35 and the inner surface of the sleeve 27. A plurality of capillary passages 45 are formed between the cup and the inner surface of the sleeve 27 so as to permit of the passage of fluid such as carbonated water through the space between the cup and the sleeve. The present invention is not concerned with this particular structure and the same is more fully referred to and described in the co-pending application Serial No. 575,782. In fact, the entire nozzle mechanism is claimed in that application as the present invention is primarily concerned with valve mechanism to be hereinafter described and in close proximity to these capillary passageways 45.

The capillary passages 45 may be of any suitable construction although it is contemplated that they may be of a spiral arrangement. The lower extremities of these passageways communicate with the interior of the outer nozzle tube 41 at 46. In fact, if it is so desired the point of communication at 46 may be in the form of a series of openings. In any event it is clear that the webs or vanes 43 in the tubular nozzle 40 serve to assist in preventing any whirling of the carbonated fluid. The webs or vanes 43 may be of any suitable number as noted before and if it is so desired they may be staggered in the passageway between the two nozzle tubes 41 and 42.

It is contemplated for sanitary reasons that the nozzle 40 may be made of any suitable plastic although I preferably propose to make it of a transparent plastic. It is detachably and snugly held in the open lower end of the movable piston-like sleeve 27.

The central aperture 36 in the syrup cup 35 is adapted to be normally closed by the rounded end of a central pin 50 carried by an upper cup 51 which includes a vent tube 52 in communication with the upper end of the cup 35. This upper cup 51 is disposed within the tank 33 and inside of a cylindrical screen 53 the lower end of which is carried on the element or ring 32 and the upper end of which is secured to a flanged ring 54.

Normally when the dispenser is in a closed position or in other words is not dispensing fluid, the beveled outer edge 55 of the cup 51 is spaced from a seat 57 provided on the ring or element 32. This enables the syrup to flow from the tank 33 through the screen 53 into the cup 35 so that a predetermined charge of syrup is available for dispensing. The syrup is, of course, held within

the cup by reason of the fact that the lower turned end of the pin 50 is seated in the centrally apertured bottom of the cup 35 so as to close and seal off the opening 36 communicating with the nozzle 40.

The ring or element 32 is provided with an inclined or diagonal passageway 56 which terminates at its lower end at the upper enlarged end 28 of the movable sleeve 27 so that upon fluid, such as carbonated beverage, entering the passageway 56 it can act directly upon the upper end of the piston-like sleeve 27 to force the same downwardly whereby both the sleeve 27 and the nozzle 40 are moved downward. The downward movement of this assembly is limited by the nozzle 40 contacting the shoulder 58 formed on the interior of the retaining ring 26.

During the course of this movement the central valve pin 50 and the cup 51 also move downwardly until the beveled edge 55 of the cup 51 is seated on the beveled shoulder 57 thus closing off the flow of syrup from the tank 33 to the cup 35. Continued downward movement results in the lower end of the pin 50 being separated from the opening 36 thus enabling the syrup in the cup 35 to travel downwardly through the central nozzle tube 42 at the same time as carbonated fluid is entering the outer tube 41 from the capillary passageways 45.

My invention is particularly concerned with the provision of a valve mechanism for controlling the flow of carbonated water or the like into the passageway 56 and more particularly with the location of this valve mechanism in close proximity to the capillary passageways 45. An advantage of having the valve mechanism, which is designated generally by the reference character 60, so arranged that the discharge of fluid is almost directly into the capillary passageways 45 through the diagonal passage 56, resides in the fact that after the valve mechanism is closed there will be a minimum amount of fluid in the passageway 56 available for subsequent drippage through the nozzle 40. I shall now proceed to describe the valve mechanism 60.

The element or ring 32 has suitably attached to it an outer valve housing 61 the left hand end of which is in direct communication with the diagonal passageway 56 and the right hand end of which, as shown in Figure 1, is closed by an annular plug 62. The interior of the casing or housing 61 between the inner end of the plug and the discharge end of the casing is provided with an inlet pipe connection 63 (Fig. 2) to which fluid or carbonated water is supplied through the valve. This fluid may be delivered to the pipe 63 from any suitable source not shown.

Positioned centrally of the casing 61 is a reciprocatory plunger 64 the outer end of which is adapted to bear against the head 65 of a plunger structure 66 for moving the valve plunger 64 in a direction toward the nozzle for opening the valve.

The plunger 64 inside of the casing is surrounded by a compression spring 67 one end of which abuts a suitable collar structure 68 on the plunger adjacent the plunger 64 and the other end of which abuts a shoulder or flange at 69 in the casing 61. This arrangement is such that the spring 67 will normally urge the plunger 64 toward the right and against the head 65 of the operating plunger mechanism 66.

The center of the plunger 64 is formed hollow for a part of its length as designated at 70 and this hollow end is in direct communication with the inclined passageway 56. The plunger is also

provided with a lateral port opening 71 in communication with the hollow 70 of the plunger and which is normally, when the valve is closed, inside of the closure plug 62 and out of communication with the inlet port 63.

Thus when the plunger 64 is pushed to the left in Figure 1 the port 71 is brought into direct communication with the inlet 63 thereby enabling carbonated fluid to flow through the bore 70 of the plunger 64 into the diagonal passageway 56 for operating the sleeve 27 in the manner previously described.

It will be perceived from Figure 1 that a series of rubber gaskets most of which are of the flat flap type are employed to seal the parts of the valve mechanism 60 wherever breaks or gaps occur. Detail description of the same is not believed necessary as such gaskets function in the usual way as sealing members.

The handle 13, connected to a rotary member 75 supported on the central pin 76a in the front 12, is provided with an internal cam surface 76 for actuating the plunger structure 66 upon rotation of the handle. This handle structure does not constitute, per se, part of this invention and hence will not be described in detail herein. However, it should be noted that any suitable mechanism may be provided for depressing the valve plunger 64 when it is desired to open the valve for dispensing fluid through the nozzle 40.

It will, of course, be understood that various details of construction may be varied through a wide range without departing from the principles of this invention and it is, therefore, not the purpose to limit the patent granted hereon otherwise than necessitated by the scope of the appended claims.

I claim as my invention:

1. In a dispenser, a nozzle, a cup closely associated therewith for supplying fluid thereto, a sleeve closely embracing the outer wall of said cup, a member disposed about said cup and defining a passageway leading to the space between said cup and sleeve, and a valve mechanism secured in said member in close proximity to said sleeve for controlling the flow of second fluid through said passageway to said space, said passageway being relatively short so as to minimize the amount of fluid left in said passageway and which would be available for drippage through said nozzle when the valve mechanism is closed, said valve mechanism including a reciprocable plunger valve movable in a direction at substantially right angles to the direction of flow of fluid through the nozzle.

2. In a dispenser, a nozzle, a cup closely associated threwith for supplying fluid thereto, a sleeve closely embracing the outer wall of said cup, a member disposed about said cup and defining a passageway leading to the space between said cup and sleeve, and a valve mechanism secured in said member in close proximity to said sleeve for controlling the flow of second fluid through said passageway to said space, said passageway being relatively short so as to minimize the amount of fluid left in said passageway and which would be available for drippage through said nozzle when the valve mechanism is closed, said nozzle comprising concentric tubular portions with the inner tube in alignment with the discharge orifice in the bottom of said cup and with the outer tube in alignment with the annular space between the cup and the sleeve, the two tubes being open at their lower ends so that the fluids may be jointly dispensed therefrom in a common stream.

3. In a dispenser, a nozzle, a cup closely associated with said nozzle for supplying fluid thereto, a sleeve closely embracing the outer wall of said cup and defining a fluid channel therebetween leading to said nozzle, a support ring disposed about said cup having a passageway leading to the channel between said cup and said sleeve, a pivotal seal ring between said cup and said support ring for permitting relative movement while maintaining the sealing engagement, a valve mechanism secured in said support ring adjacent said passageway and connected to a source of a second fluid, and means for actuating said valve mechanism for permitting flow of the second fluid directly into said passageway to act on said sleeve to move it downwardly for discharge of said first and second fluid from said nozzle.

CARL C. BAUERLEIN.

REFERENCES CITED

The following references are of record in the file of this patent:

UNITED STATES PATENTS

Number	Name	Date
1,180,848	Hess	Apr. 25, 1916
2,415,361	Bauerlein et al.	Feb. 18, 1947