July 4, 1961 W. C. GEORGE ET AL 2,990,999

ONE PIECE MULTI-TRIP RECTANGULAR CONTAINER

Filed July 31, 1958 2 Sheets-Sheet 1

FIG. 1

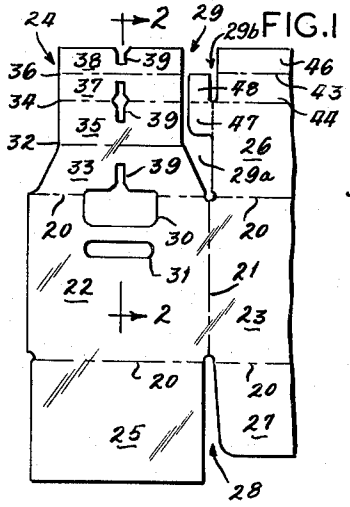

FIG. 11

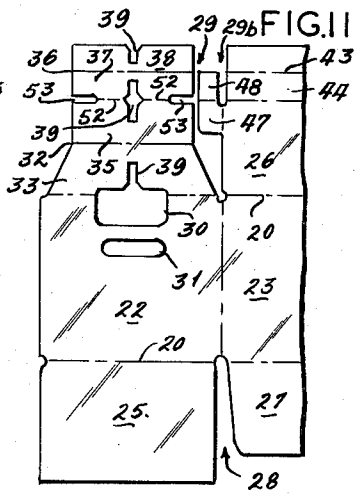

FIG. 14

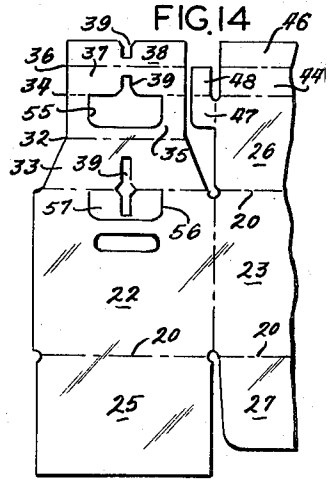

FIG. 6

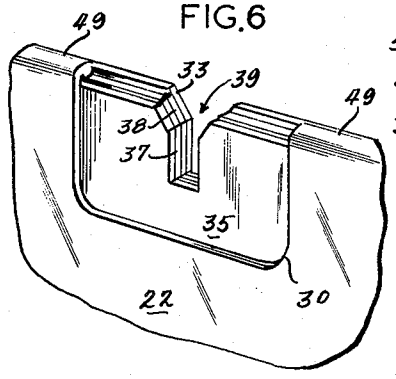

FIG. 12

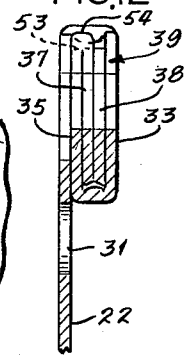

FIG. 15

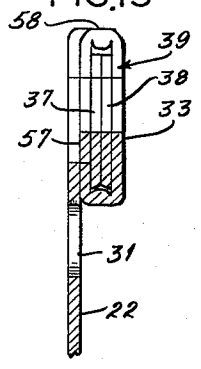

FIG. 13

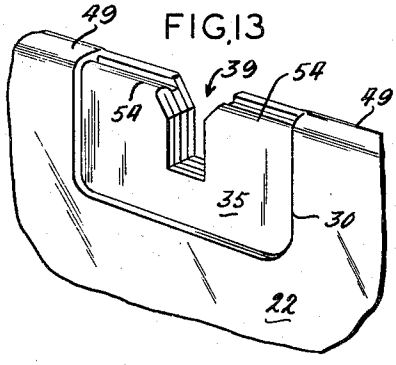

FIG. 16

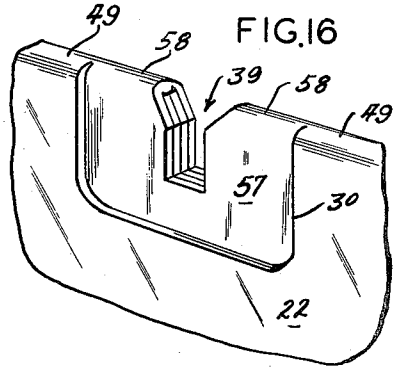

INVENTORS:
WALTER C. GEORGE
RUSSELL B. THIMMIG

By William Thyc

ATTORNEY.

July 4, 1961 W. C. GEORGE ET AL 2,990,999

ONE PIECE MULTI-TRIP RECTANGULAR CONTAINER

Filed July 31, 1958 2 Sheets-Sheet 2

FIG.7

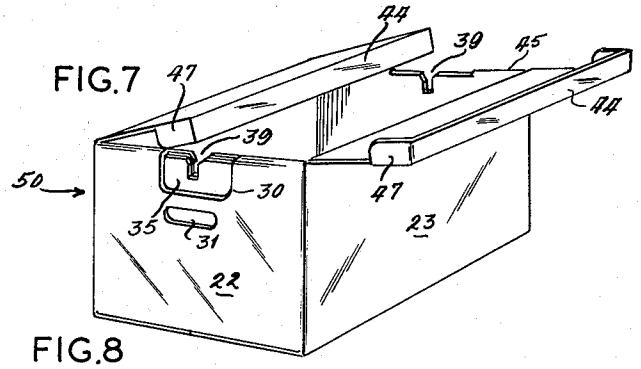

FIG.8

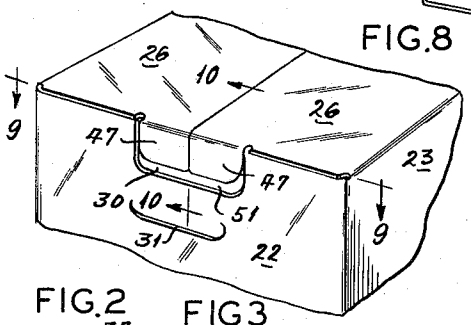

FIG.2

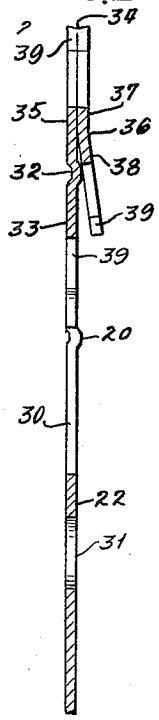

FIG.3

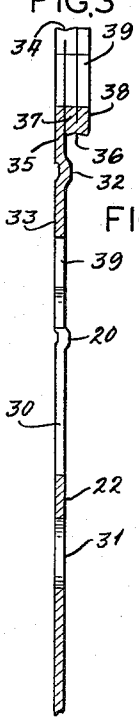

FIG.4

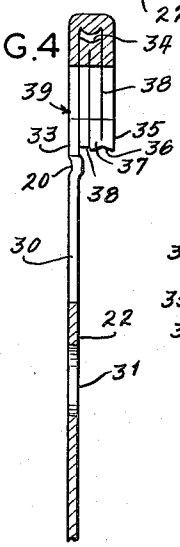

FIG.5

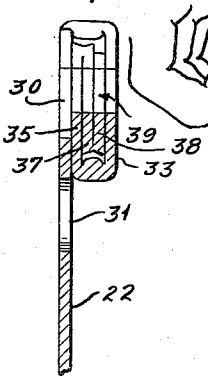

FIG.9

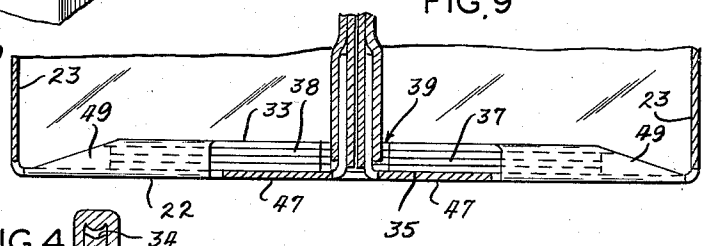

FIG.10

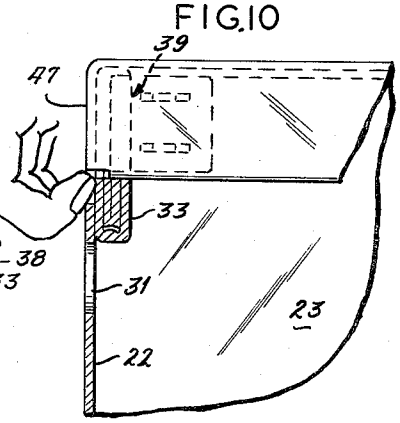

INVENTORS
WALTER C. GEORGE
RUSSELL B. THIMMIG
By Williamson
ATTORNEY.

United States Patent Office 2,990,999 Patented July 4, 1961

2,990,999

ONE PIECE MULTI-TRIP RECTANGULAR CONTAINER

Walter C. George and Russell B. Thimmig, Jr., St. Louis, Mo., assignors to Crown Zellerbach Corporation, San Francisco, Calif., a corporation of Nevada

Filed July 31, 1958, Ser. No. 752,369
7 Claims. (Cl. 229—44)

The invention relates to a rectangular container with half covers having downwardly projecting side flanges connected in right angular relation to downwardly folded flanges on the outer portions of the ends of the split covers which end flanges, in the closed position of the covers, are enclosed in a recess in the upper margin of the end panels with their outer surface in substantially the plane of the outer surface of the end panel, eliminating the hazard of outward projections frequently the cause of damage in handling and particularly to palletized loaded containers.

More specifically the container comprises conventional connected together pairs of opposed side and end walls, a bottom and half cover members hinged to and co-extensive in length with respect to the side walls with right angularly downwardly folded flanges on their side edges. In a preferred form of the invention the end panels have a flap hinged to their upper edges preferably folded to form a plurality of juxtaposed reinforcing plies secured to the inner face of the upper margin thereof and terminating at the upper boundary of the handholes provided in the upper margin of the end panels. Each cover member has a flange folded right angularly downwardly on the outer portion of its end edges connected by an extension therefrom in right angular relation to the side flanges of the cover.

In the closed position of the covers the end margins of the side flanges and the connecting extension of the end flanges thereof in a vertical slot formed in the end panels including the juxtaposed reinforcing plies, while the end flanges of the cover are enclosed in a novel recess in the upper margin of the end panel substantially equal in depth to the thickness of the end cover flanges. The recess is dimensioned to only slightly exceed the outline of the combined end cover flaps in their closed position excepting the lower horizontal boundary thereof which may be lowered sufficiently to provide a convenient finger grip for opening the covers. The outer face of the end flanges of the covers are thus positioned in substantially the plane of the outer face of the end panel and maintain an exterior surface thereof free from outwardly extending obstructions which may result in unintentional opening of the covers or in damage to loaded containers in handling and for example when palletized or stacked in tiers.

The opposed cover end flanges form a friction fit over the exposed ply of the end panel reinforcement, in effect, providing a longitudinal brace and serving the additional important function of distributing the strain between the end panels when the loaded container is grasped by one handhole as is the usual practice in handling containers of this kind. Thus the invention not only provides a one piece container of highly desirable smooth exterior surfaces to all of the panels of the container including the end panels, free of outward projections, but concomitantly serves to distribute the strain between the end panels of the loaded container when it is grasped by one handhole.

The reinforcement of the end panels above the upper boundary of the handholes may be provided in several ways. One form is illustrated in FIGS. 1 to 6 inclusive which results in a reinforcement of four juxtaposed plies on the inner face of the end panel. In this form of

the reinforcement, the flap hinged to the top of the end panel forms a smooth fold extending from the vertical sides of the recess boundaries in the end panel outwardly to the adjacent corners of the container. The inner portion of the ends of the split cover rest on the said folds, completing the neat and attractive appearance of the container. In this style of the reinforcement the end panel flap is divided outwardly from its hinge line to its free end edge into four sections by a standard score, then a cut score and finally a perforated score. This scoring results in upper folded edges of the plies between the vertical side boundaries of the recess in the end panel as illustrated in FIG. 6.

A modified folding of the end panel reinforcing flap is shown in FIGS. 11, 12 and 13. In this form both first and second scores are standard and the outermost score perforated, resulting in a smooth rounded top fold of the second and third sections of the flap between the vertical side boundaries of the said recess. This rounded fold tends to eliminate the possible chance hanging of the cover flanges on the flat raw edges of the flap sections or plies of the end panel reinforcement between the vertical side boundaries of the end panel recess.

Still another modification of the end panel recess and reinforcement, illustrated in FIGS. 14 to 16 inclusive, provides a rounded fold extending entirely across the top edge of the end panel. In this form, the section of the end panel flap which is folded in juxtaposed relation to the inner face of the end panel is recessed as hereinbefore described to slightly exceed the outline of the combined end cover flaps in their closed position. The end panel proper is slit from its top edge downwardly then horizontally in alignment with the boundaries of the recess in the juxtaposed section of the reinforcing flap. The slit portion thus released is forced into the described recess in the closed position of the covers, the end flanges of the covers seat in the described recess, insuring an outer face of the panel entirely free of objectionable projections and the rounded fold at the top of the end panel extends from its side edges to the boundaries of the cover receiving slot in the end panel.

While the several forms of the end panel reinforcement describe forming four folded sections of the reinforcement flap, it should be understood that other methods of folding may be employed resulting in a greater or lesser number of sections or juxtaposed plies on the inner face of the end panel depending upon the extent of reinforcement required.

One of the principal objects of the invention is to provide a rectangular shipping container with half covers, the latter having right angularly downwardly folded flanges on their outer end edges seating in a recess in the end panel correspondng to the outline of the combined end cover flanges whereby the exterior surface of the end panels is maintained free of objectionable obstructions in the closed position of the covers.

Another object of this invention is to provide a recess in the outer ply of the end panels of a rectangular shipping container for receiving flanges on the outer end portion of the half covers folded right angularly downwardly, whereby the cover flanges cooperate to distribute the weight between the end panels when the loaded container is grasped, as is the usual practice, by one handhole, yet the exterior face of the end panel is entirely free from outwardly extending obstructions which may, in some cases, result in damage to loaded containers in handling and especially when stacked in tiers.

Still another object is to provide in a one piece rectangular container having half covers with downwardly folded flanges on their sides and ends connected by a tab in right angular relation to each other and end panels with a multi-ply reinforcement on their inner face above

handholes therein with a vertical slot in their upper margins positioned to receive the secured together split cover flanges; wherein the end flanges of the covers seat in a recess in the upper margin of the end panel slightly exceeding the outline of the combined end flanges of the split covers in their closed position, the end flanges being in frictional engagement with the exposed face of the end panel reinforcement ply with the outer faces of the cover end flanges in substantially the plane of the outer face of the end panel.

These and other objects and advantages of the invention will be apparent to those skilled in the art and a complete understanding of the construction and operation of the device as hereinafter set forth.

The accompanying drawings form a part of this specification and like numerals and symbols therein appearing refer to like parts wherever they occur.

In the drawings:

FIG. 1 is a plan view of the end panel and a portion of the side panel connected thereto.

FIGS. 2, 3, 4 and 5 are vertical sections of the end panel showing progressive stages of folding of the top reinforcing flap.

FIG. 6 is a perspective view of the end panel showing the recess therein for receiving the end flanges of the half covers.

FIG. 7 is a perspective view of the erected container with one half cover extended outwardly and the other in process of closing.

FIG. 8 is an enlarged perspective view of the end of the fully assembled container showing the end flanges of the half covers positioned in the end panel recess.

FIG. 9 is a section of the end of the assembled container taken in the direction of the arrows **9—9** of FIG. 8.

FIG. 10 is a section of the end of the assembled container taken in the direction of the arrows **10—10** of FIG. 8.

FIG. 11 is a plan view of a modified end panel and a portion of the connected side wall.

FIG. 12 is a vertical section of the folded reinforcing flap of the end panel of FIG. 11.

FIG. 13 is a perspective view of the end panel showing the rounded fold of two of the sections of the reinforcing flap.

FIG. 14 is a plan view of another modification of the end panel and its reinforcing flap.

FIG. 15 is a vertical section of the folded reinforcing flap of the end panel of FIG. 14.

FIG. 16 is a perspective drawing of the end panel illustrating the completely rounded end of the reinforcing flap from the side boundaries of the slot outwardly.

The container constructed of heavy duty fibreboard or other suitable bendable material, is formed from connected together side and end walls with bottom closure flaps, a reinforcing flap hinged to the upper edge of the end panels and half covers hinged to the upper edges of the side walls, each cover having longitudinal reinforcing flanges.

A portion of the blank from which one form of the container of the invention is formed is illustrated in FIG. 1 wherein longitudinal scores **20** partially defined end panels **22**, side panels **23** and the inner boundaries of bottom flaps **25** and **27**. Transverse scores **21** complete the definition of the end panels **22** and side panels **23**. A glue flap on one end panel, not shown, is foldably attached to the remote side wall of the blank. Tapered slots **28** separate the end and side panel bottom flaps **25** and **27**. Handholes in the end panels are indicated at **31** while a cut-out **30** is formed in the end panel for receiving the end flanges of the half covers of the container in their closed position, as will be described hereinafter. The depth of the recess **30** corresponds substantially to the thickness of the end cover flanges. Vertical slots in the end panel and the plies of the reinforcing flaps are indicated at **39**, FIG. 1.

While various forms of reinforcement of the inner face of the end panel above the handholes may be employed, a satisfactory style may be formed by a flap **24** hinged at **20** to the upper edge of the end panel. The flap is divided into sections **33**, **35**, **37** and **38** defined respectively by a standard score **32**, a cut score **34** and a perforated score **36**. The side edges of section **33** may be inwardly tapered as shown in FIG. 1 and the reinforcing flap separated from the side wall half cover **26** and the side wall end flanges **47** by a vertical slot **29** terminating inwardly in an irregular shaped opening **29***a*. Longitudinal scores **42** define the outer boundary of half covers **26** and the inner boundary of side flanges **44** while longitudinal scores **43** separate the reinforcing flange **44** from the outermost side flange **46**. The outer end edges of the half covers **26** have a flange **47** and a connecting extension **48** for securing the downturned side and end flanges of the covers in right angular relation to each other, the extension **48** being separated from reinforcing flange **44** by slot **29***b*.

The progressive stages of folding the end panel reinforcement **24** about the scores **32**, **34** and **36** is shown in the vertical sections FIGS. 2, 3, 4 and 5.

The completely assembled end panel is illustrated in the perspective views FIG. 6 wherein the recess for receiving the end flanges of the half covers is shown at **30** and with the folded sections **33**, **35**, **37** and **38** of the end panel reinforcing flap **24** and also the rounded fold **49** of a portion of the reinforcing flap **24** over the top edges of the reinforcing sections extending from the sides of the recess to approximately the sides of the end panel. The fully assembled container **50** is shown in perspective in FIG. 7 with one of the half covers fully opened and the other half cover in the process of closing.

An enlarged perspective view of the end of the fully assembled container is shown in FIG. 8. A horizontal section view of the end construction is illustrated in FIG. 9 taken in the direction of the arrows **9—9** of FIG. 8. Vertical section FIG. 10 taken in the direction of arrows **10—10** of FIG. 8 illustrates the operation of opening the cover by means of the finger hole **51**.

A plan view of a modification of the end panel blank is shown in FIG. 11. In this form of the invention the cut score **34** is replaced by a standard score **52** with horizontal slots **53** on each end which results in a fold of two of the sections of the reinforcing flap **24** illustrated in the vertical section FIG. 12 and more particularly in the enlarged perspective of FIG. 13. In this form of the invention the sections **35** and **37** of the reinforcing flap **24** form a rounded fold **54** at the top edge approximately in line with the fold **49** extending from the side boundaries of the recess **30**. This construction substantially eliminates any tendency of the half cover end flaps **40** catching on the raw edges of the exposed portions of the folded sections of the end panel reinforcing flap **24** which sometimes may occur.

Still another modification of the end panel recess and the folded reinforcing flap **24** is shown in the plan view of FIG. 14. In this modification a cut-out **55** is formed in section **35** of the reinforcing flap and the end panel is slit at **56** to conform in outline to the cut-out **55** in the section **35** of the reinforcing flap. When the sections of the end panel flaps are folded in flatwise relation to each other and against the inner face of the end panel, the cut-out **55** in section **35** will be aligned immediately back of the portion **57** of the end panel proper defined by the slit **56** free edge. The section **57** of the end panel is then forced inwardly into the cut-out **55** as the covers are closed providing a void into which the half cover end flanges **47** are enclosed as shown in FIG. 8. This modification results substantially in a continuation **58** of the smooth fold **49** at the top edges of the end panel extending therefrom to the side boundaries of the slot **39**. As in the hereinbefore described forms of the invention this

modification results in a smooth surface of the end panel when the covers are in closed position as illustrated in FIG. 8.

An important feature of the invention is the cut-out or void in the upper margins of the end panels for receiving the end flanges of the half covers in flatwise frictional relation to the exposed face of the outer ply of the end panel reinforcement whereby, when the covers are closed, the outer face of the end flanges of the half covers automatically fall into substantially the same plane as the outer face of the end panel, providing an exterior surface free from projections and also, when the loaded container is grasped by one handhole, distributing the strain between the end panels.

It is understood that the particular embodiments of the invention described are illustrative and not restrictive. The invention may be susceptible of embodiments in other modified forms and all modifications which are similar in outline and equivalent thereto including three piece split cover containers come equally within the scope of the claims next appearing.

We claim:

1. In a rectangular shipping container with half covers hinged to the side walls and downwardly folded flanges on the sides and outer ends of the covers, said flanges connected together in substantially right angular relation to the respective half covers, end panels with handholes in their upper margins and a foldably attached reinforcing panel transversely scored to form a plurality of reinforcing plies secured in contacting flatwise relation to the upper margins of the inner face thereof above the handholes, a vertical slot in the upper margin of the end panels and the attached reinforcing plies adapted to receive the downturned flanges of the half covers, means for maintaining an exterior end panel surface with covers closed free from outward projections thereon, said means comprising an inner free edge defining a cut-out in the upper margin of the end panels superposed over the reinforcing plies and of a configuration corresponding generally to the outline of the combined end cover flanges, whereby in their closed position the end cover flanges seat in said cut-out with their outer surface in substantially the plane of the outer surface of the end panel.

2. In a rectangular shipping container with half covers hinged to the side walls and downwardly folded flanges on the sides and outer ends of the covers, said flanges connected together in substantially right angular relation to the respective half cover, end panels with handholes in their upper margins and a reinforcing panel transversely scored to form a plurality of reinforcing plies secured in contacting flatwise relation to the upper margins of the inner face above the handholes, a vertical slot in the upper margin of the end panels and the attached reinforcing plies adapted to receive the downturned flanges of the half covers, means for maintaining an exterior end panel surface with the covers closed free from outward projections thereon, said means comprising an inner free edge defining a cut-out in the upper margin of the end panels, superposed over the reinforcing plies and of a configuration corresponding generally to the outline of the combined end cover flanges in closed relation, the length of the split covers related to the container so that in their closed position the end flanges thereof are in frictional engagement throughout with the exposed face of the cut-out in the end panel so that the end cover flanges seat in said cut-out with their outer surface in substantially the plane of the outer surface of the end panels.

3. The container set forth and claimed in claim 2 wherein the lower horizontal boundary of the cut-out in the end panel is lowered slightly to provide a finger grip for opening the covers.

4. The container set forth and claimed in claim 2 wherein the reinforcing flap integral with the upper edge of the end panel is scored transversely successively outwardly from its hinge line by a standard score, a cut score and a perforated score defining four sections of the flap folded in juxtaposed relation to each other and secured to the inner face of the end panel.

5. The container set forth and claimed in claim 2 wherein the transverse cut score is replaced by a standard score whereby the top edges of said second and third section form a smooth fold extending between the side boundaries of the cut-out in the end panel.

6. In a rectangular shipping container with half covers hinged to the side walls and downwardly folded flanges on the sides and outer ends of the covers, said flanges connected together in substantially right angular relation to the respective half covers, end panels with handholes in their upper margins and a foldably attached reinforcing panel transversely scored to form a plurality of reinforcing plies secured in contacting flatwise relation to the upper margins of the inner face thereof above the handholes, a vertical slot in the upper margin of the end panels and the attached reinforcing plies adapted to receive the downturned flanges of the half covers, a cut-out in the upper margin of the outermost reinforcing ply corresponding generally in configuration to the combined outline of the end flanges of the covers in their closed relation, in the end panel an inner free slit edge defining a cut-out portion in the upper margin thereof, said cut-out portion integral with the reinforcing panel and corresponding generally in configuration to the cut-out in the reinforcing ply, the end panel cut-out portion seated within the cut-out in the reinforcing ply, the end cover flanges enclosed within the void defined by the inner free slit edge with their outer surface in substantially the plane of the outer surface of the end panel.

7. In a rectangular shipping container with half covers hinged to the side walls and downwardly folded flanges on the sides and outer ends of the covers, said flanges connected together in substantially right-angular relation to the respective half covers, end panels with hand holes in their upper margins and foldably attached reinforcing panel transversely scored to form a plurality of reinforcing plies secured in contacting flatwise relation to the upper margins of the inner face thereof, a vertical slot in the upper margin of the end panels in the attached reinforcing plies adapted to receive the downturned flanges of the half covers, means for maintaining an exterior end panel surface with covers closed free from outward projections thereon, said means comprising a cut-out portion having free opposed side edges continuous with a bottom edge, the edges defining a recess in the outer surface of each end wall, the recesses being backed up by an adjacent ply of the reinforcing panel, the dimensions of each recess in its end wall being such as to receive therein respectively the end cover flanges of each cover, and which flanges are substantially in the plane of the outer surface of each end wall and thus resulting in a substantially smooth end wall outer surface.

References Cited in the file of this patent

UNITED STATES PATENTS

2,331,651	Broeren	Oct. 12, 1943
2,823,846	George	Feb. 18, 1958
2,865,554	Repking	Dec. 23, 1958
2,900,123	Drnec et al.	Aug. 18, 1959