**(12) STANDARD PATENT** (11) Application No. **AU 2009269134 B2**
**(19) AUSTRALIAN PATENT OFFICE**

(54) Title
**Retention holster**

(51) International Patent Classification(s)
***F41C 33/02*** (2006.01)

(21) Application No: **2009269134** (22) Date of Filing: **2009.06.30**

(87) WIPO No: **WO10/005512**

(30) Priority Data

| (31) Number | (32) Date | (33) Country |
|---|---|---|
| **12/215,755** | **2008.06.30** | **US** |

(43) Publication Date: **2010.01.14**
(44) Accepted Journal Date: **2013.10.10**

(71) Applicant(s)
**Alliant Techsystems Inc.**

(72) Inventor(s)
**Yeates, Eric M.;Cook, Clifton L.;Gregory, Thomas M.;Buis III, Charles E.;Kincaid, Robert A.**

(74) Agent / Attorney
**FB Rice, Level 23 44 Market Street, SYDNEY, NSW, 2000**

(56) Related Art
**US 2007/0181619 A1**
**US 2005/0035163 A1**
**US 5284281 A**

(12) INTERNATIONAL APPLICATION PUBLISHED UNDER THE PATENT COOPERATION TREATY (PCT)

CORRECTED VERSION

(19) World Intellectual Property Organization
International Bureau

(43) International Publication Date
14 January 2010 (14.01.2010)

PCT

(10) International Publication Number
WO 2010/005512 A8

(51) International Patent Classification:
*F41C 33/02* (2006.01)

(21) International Application Number:
PCT/US2009/003869

(22) International Filing Date:
30 June 2009 (30.06.2009)

(25) Filing Language: English

(26) Publication Language: English

(30) Priority Data:
12/215,755 30 June 2008 (30.06.2008) US

(72) Inventors; and
(71) Applicants : **KINCAID, Robert, A.** [US/US]; 122 Bennett Drive, Bozeman, MT 59715 (US). **GREGORY, Thomas, M.** [US/US]; 307 A1 Drive, Belgrade, MT 59714 (US). **YEATES, Eric, M.** [US/US]; 2313 W. Great Neck Road # 104, Virginia Beach, VA 23451 (US). **COOK, Clifton, L.** [US/US]; 9317 W. Pandion Court, Boise, ID 83714 (US). **BUIS III, Charles, E.** [US/US]; 1317 Baycliff Drive, Virginia Beach, VA 23454 (US).

(74) Agent: **SHADDOCK II, Peter, A.**; Bowman Green Hampton & Kelly, PLLC, 501 Independence Parkway, Suite 201, Chesapeake, VA 23320-5173 (US).

(81) Designated States *(unless otherwise indicated, for every kind of national protection available)*: AE, AG, AL, AM, AO, AT, AU, AZ, BA, BB, BG, BH, BR, BW, BY, BZ, CA, CH, CL, CN, CO, CR, CU, CZ, DE, DK, DM, DO, DZ, EC, EE, EG, ES, FI, GB, GD, GE, GH, GM, GT, HN, HR, HU, ID, IL, IN, IS, JP, KE, KG, KM, KN, KP, KR, KZ, LA, LC, LK, LR, LS, LT, LU, LY, MA, MD, ME, MG, MK, MN, MW, MX, MY, MZ, NA, NG, NI, NO, NZ, OM, PE, PG, PH, PL, PT, RO, RS, RU, SC, SD, SE, SG, SK, SL, SM, ST, SV, SY, TJ, TM, TN, TR, TT, TZ, UA, UG, US, UZ, VC, VN, ZA, ZM, ZW.

(84) Designated States *(unless otherwise indicated, for every kind of regional protection available)*: ARIPO (BW, GH, GM, KE, LS, MW, MZ, NA, SD, SL, SZ, TZ, UG, ZM, ZW), Eurasian (AM, AZ, BY, KG, KZ, MD, RU, TJ, TM), European (AT, BE, BG, CH, CY, CZ, DE, DK, EE, ES, FI, FR, GB, GR, HR, HU, IE, IS, IT, LT, LU, LV, MC, MK, MT, NL, NO, PL, PT, RO, SE, SI, SK, TR), OAPI (BF, BJ, CF, CG, CI, CM, GA, GN, GQ, GW, ML, MR, NE, SN, TD, TG).

**Published**:

— *with international search report (Art. 21(3))*

(48) Date of publication of this corrected version:
13 October 2011

*[Continued on next page]*

(54) Title: RETENTION HOLSTER

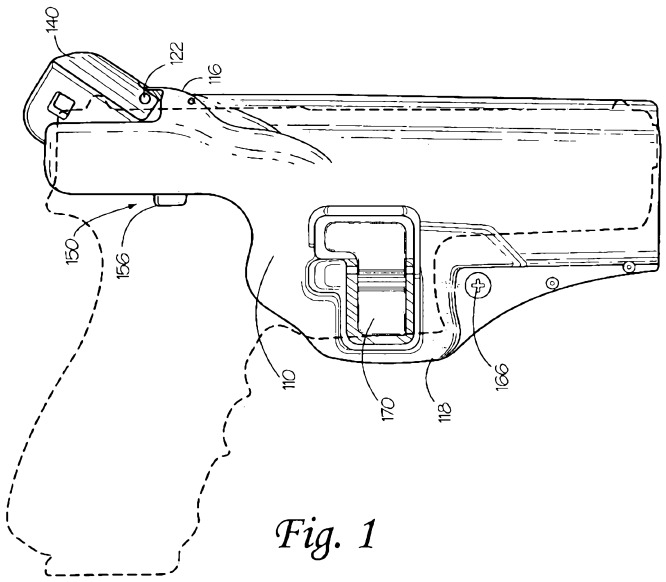


*Fig. 1*

(57) Abstract: A holster for a handgun having a holster body defining a cavity for receiving and holding a handgun, a pivot guard pivotably coupled to the body and pivotable between a closed position for securing a handgun within the cavity and an open position for insertion or removal of the handgun, wherein the pivot guard includes a pivot guard locking means for receiving at least a portion of a pivot guard locking portion for securing the pivot guard in the closed position, and wherein the pivot guard includes a locking extension that extends from each side of the pivot guard and the holster body includes a corresponding retaining channels formed within the cavity such that when the pivot guard is in the closed position, each locking extension of the pivot guard extends into a corresponding retaining channel of the holster body.

WO 2010/005512 A8

# RETENTION HOLSTER

## CROSS-REFERENCE TO RELATED APPLICATIONS

**[0001]** This patent application claims the benefit of U.S. Patent Application Serial No. 12/215,755, filed June 30, 2008, the disclosure of which is incorporated herein by reference.

# BACKGROUND OF THE INVENTION

## 1. Field of the Invention

[0002] The present invention is directed generally to a holster for a weapon such as a handgun. More specifically, the present invention is directed to a generally rigid holster having a pivot guard retention system for securing a handgun such that the handgun is retained or locked in the holster when the pivot guard is in a closed position, but may be easily removed from the holster when the pivot guard is in an open position.

## 2. Description of Related Art

[0003] Many handgun users, particularly military and law enforcement personnel, carry a handgun in a holster designed to protect the handgun and hold it securely. Holsters can be worn in a number of ways and in a variety of locations on a user's body, such as at the waist, on the thigh, around an ankle, under an arm, or on the chest.

[0004] Handgun users must be able to quickly and easily remove the handgun from its holster regardless of the type of holster used or the location of the holster. Additionally, users need to be assured that, when not in use, the handgun will remain safely in the holster. Of equal, or possibly greater importance, the user must be able to quickly secure or re-secure the weapon in the holster when it is not being employed.

[0005] Some holsters rely solely on a friction fit between the holster and the handgun to secure the handgun in place. These types of holsters are generally not suitable for situations where the gun/holster is subject to a great deal of movement because such movement could cause the handgun to lose frictional engagement with the holster and allow the handgun to become dislodged from the holster.

2009269134 05 Aug 2013

**[0006]** Certain other holsters include a variety of strap or flap arrangements that prevent removal of the firearm from the holster while the strap or flap is in place.

**[0007]** Generally, with designs that rely on strap or flap arrangements to retain a handgun, the user must first unfasten and/or rotate a strap or unfasten and open a flap before the firearm can be withdrawn. The user may have to move the strap or flap before the handgun can be re-holstered, typically causing the user to look down at the holster and take his or her eyes off of a possible threat. Then, once the handgun has been re-holstered, the user must physically reposition and refasten the strap or flap before the firearm is securely retained within the holster.

**[0007a]** Any discussion of documents, acts, materials, devices, articles or the like which has been included in the present specification is not to be taken as an admission that any or all of these matters form part of the prior art base or were common general knowledge in the field relevant to the present disclosure as it existed before the priority date of each claim of this application.

2009269134 05 Aug 2013

## SUMMARY OF THE INVENTION

**[0008]** The prior holster retention systems and methods are often not preferred because of the time and number of steps required to release and/or quickly re-secure the handgun. Furthermore, the prior designs generally require the user to perform some task that interferes with the user establishing a proper initial control grip on the handgun.

**[0009]** Also, it is possible for the strap of known designs to be forced over the slide or roll over the backstrap and effectively lock the handgun into the holster. If the strap becomes loose, it can sink into the cavity of the holster and may keep the handgun from be placed in the holster, may hang on a portion of the handgun as it is being placed in the holster, or may even trap on the handgun's trigger and cause an accidental discharge.

**[0009a]** Throughout this specification the word "comprise", or variations such as "comprises" or "comprising", will be understood to imply the inclusion of a stated element, integer or step, or group of elements, integers or steps, but not the exclusion of any other element, integer or step, or group of elements, integers or steps.

**[0010]** Accordingly, the present invention is directed generally to a guarded holster for a weapon such as a handgun. More specifically, in various illustrative, non-limiting embodiments of this invention, the holster comprises a handgun holster having a pivot guard-type retention system. The holster comprises a holster body defining a cavity for receiving and holding the weapon, the holster body having a pair of opposed side walls, a front wall, and a rear wall.

**[0010a]** In a broad aspect, the present invention provides a holster for a handgun, comprising:

a holster body defining a cavity for receiving a handgun;

a pivot guard pivotably coupled to the holster body, wherein the pivot guard is pivotable between a closed position and an open position, wherein the pivot guard is biased to the open position by a biasing means, wherein the pivot guard includes a locking means for receiving at least a portion of a locking portion of a release lever

for securing the pivot guard in the closed position, and wherein the pivot guard includes locking extensions that extend from each side of the pivot guard, and wherein the holster body includes corresponding retaining channels formed within the cavity such that when the pivot guard is in the closed position, each locking extension of the pivot guard extends into a corresponding retaining channel of the holster body; and

the release lever coupled to the holster body for releasably securing the pivot guard in the closed position, wherein the release lever includes at least some of the locking portion and a thumb/finger engagement portion, wherein the release lever is biased to a pivot guard retention position such that the locking portion protrudes into the locking means so as to secure the pivot guard in the closed position, but wherein the release lever is capable of being pivoted to a release position when a pivoting force is applied to the thumb/finger engagement portion such that the locking portion is sufficiently withdrawn from the locking means so as to allow the pivot guard to pivot to the open position.

**[0011]** In at least some embodiments, the holster may include a retention system comprising a spring-biased pivot guard that is pivotably coupled to the holster body, such that the pivot guard is pivotable between a closed position for securing the weapon within the holster cavity and an open position for removal of the weapon. The pivot guard may be spring-biased to the open position.

**[0012]** In at least some embodiments, a locking portion of a pivot guard release lever secures the pivot guard in the closed position when a weapon is held in the holster cavity. When the bias of the pivot guard release is overcome, a locking portion associated with the pivot guard release releases the pivot guard to the open position, allowing for removal of the weapon.

**[0013]** In various illustrative, non-limiting embodiments of this invention, when the pivot guard is in the open position, the locking portion of the pivot guard release keeps the pivot guard from pivoting to the closed position until the weapon is placed in the holster cavity, thereby permitting quick and unencumbered re-holstering of the weapon.

**[0014]** In certain exemplary, illustrative, non-limiting embodiments of this invention, at least one additional retention means is optionally included as part of the guarded holster retention system.

**[0015]** In still other exemplary, illustrative, non-limiting embodiments of this invention, the pivot guard is formed such that, when the pivot guard is in the closed position, the pivot guard extends so as to cover the exposed hammer and/or hammer spur of the retained handgun.

**[0016]** Thus, at least some embodiments of the present invention comprise a guarded holster type retention system that secures a handgun such that the handgun is retained or locked in the holster when the retention system is engaged, but may be easily removed from the holster when the retention system, and any additional active retention system, is disengaged.

**[0017]** Accordingly, at least some embodiments of this invention provide a holster, having a simple and reliable quick-release retention system.

**[0018]** At least some embodiments of this invention separately provide a holster having a retention system, which is capable of retaining a handgun securely in the holster while permitting a quick release of the handgun when the user requires.

**[0019]** At least some embodiments of this invention separately provide a holster having an optional additional retention system.

**[0020]** At least some embodiments of this invention separately provide a holster, which is capable of being manufactured using injection molding and/or thermoform production techniques.

**[0021]** These and other features and advantages of embodiments of this invention are described in or are apparent from the following detailed description of exemplary embodiments.

## BRIEF DESCRIPTION OF THE DRAWINGS

[0022] The exemplary embodiments of this invention will be described in detail, with reference to the following figures, wherein like reference numerals refer to like parts throughout the several views, and wherein:

[0023] Fig. 1 shows a left side elevation view of a first exemplary embodiment of a handgun holster having a retention system according to this invention, wherein the pivot guard is shown in the open position;

[0024] Fig. 2A shows a rear elevation view of a first exemplary embodiment of a handgun holster having a retention system according to this invention, wherein the pivot guard release lever is biased to a pivot guard retention position and the pivot guard is in a closed position;

[0025] Fig. 2B shows a more detailed view of the release system of the first exemplary embodiment of the handgun holster of Fig. 2A, wherein the pivot guard release lever is biased to a pivot guard retention position and the pivot guard is in a closed position according to this invention;

[0026] Fig. 2C shows a more detailed view of the release system of the first exemplary embodiment of the handgun holster of Fig. 2A, wherein the pivot guard release lever is biased to a pivot guard release position and the pivot guard is biased to an open position according to this invention;

[0027] Fig. 2D shows a more detailed view of the release system of the first exemplary embodiment of the handgun holster of Fig. 2A, wherein the pivot guard release lever is biased to a pivot guard retention position and the pivot guard is biased to an open position according to this invention;

[0028] Fig. 3 shows a partial exploded rear elevation view of a first exemplary embodiment of a handgun holster having a retention system according to this invention;

[0029] Fig. 4A shows a side elevation view of a first exemplary embodiment of the pivot guard release lever according to this invention;

[0030] Fig. 4B shows a top view of a first exemplary embodiment of the pivot guard release lever according to this invention;

[0031] Fig. 4C shows a top view of a first exemplary embodiment of the pivot guard release lever, wherein the pivot guard release lever is biased to a pivot guard retention position and the pivot guard is maintained in a closed position according to this invention;

[0032] Fig. 4D shows a top view of a second exemplary embodiment of the pivot guard release lever according to this invention;

[0033] Fig. 5A shows a side elevation view of an additional exemplary embodiment of the pivot guard release lever according to this invention;

[0034] Fig. 5B shows a top view of an additional exemplary embodiment of the pivot guard release lever, wherein the pivot guard release lever is biased to a pivot guard retention position and the pivot guard is maintained in a closed position according to this invention;

[0035] Fig. 6 shows a rear elevation view of a first exemplary embodiment of a handgun holster having a retention system, further illustrating a user's thumb pivoting the pivot guard release lever to a pivot guard release position according to this invention;

[0036] Fig. 7A shows a right side elevation view of a first exemplary embodiment of a handgun holster having a retention system, wherein the pivot guard is shown in the closed position according to this invention;

[0037] Fig. 7B shows a more detailed view of the pivot guard area of Fig. 6A, wherein the pivot guard is shown in the opened position according to this invention;

[0038] Fig. 8A shows a cross-sectional view of the pivot guard area of the first exemplary embodiment of the handgun holster having a retention system according to this invention, wherein the pivot guard is shown in the closed position;

[0039] Fig. 8B shows a cross-sectional view of the pivot guard area of the first exemplary embodiment of the handgun holster having a retention system according to this invention, wherein the pivot guard is shown in the opened position;

[0040] Fig. 9 shows a front elevation view of the pivot guard area of the first exemplary embodiment of the handgun holster having a retention system according to this invention;

[0041] Fig. 10A shows a top cross-sectional view taken along line A-A of the handgun holster of Fig. 6A, illustrating the first exemplary embodiment of the retention system according to this invention in greater detail;

[0042] Fig. 10B shows a top cross-sectional view taken along line B-B of the handgun holster of Fig. 6A, illustrating the first exemplary embodiment of the retention system according to this invention in greater detail;

[0043] Fig. 11 shows a left side elevation view of an additional exemplary embodiment of a handgun holster having a retention system according to this invention, wherein the pivot guard is shown in the open position (and shown in the closed position in phantom);

[0044] Fig. 12 shows a right side elevation view of the additional exemplary embodiment of the handgun holster having a retention system, wherein the pivot guard is shown in the open position (and shown in the closed position in phantom);

[0045] Fig. 13A shows a more detailed rear elevation view of the release system of an exemplary embodiment of the handgun holster, wherein a single locking extension is formed on the pivot guard and a corresponding retaining channel is formed within the holster cavity; and

[0046] Fig. 13B shows a more detailed rear elevation view of the release system of the additional exemplary embodiment of the handgun holster, wherein the pivot guard is formed with locking extensions that extend from each side of the pivot guard and corresponding retaining channels are formed within the cavity on either side of the holster body; and

**[0047]** Fig. 14 shows a more detailed perspective view of the release system of the additional exemplary embodiment of the handgun holster, wherein the pivot guard release lever is biased to a pivot guard retention position and the pivot guard is in a closed position according to this invention.

## DETAILED DESCRIPTION OF EXEMPLARY EMBODIMENTS

[0048] For simplicity and clarification, the design factors and operating principles of the guarded holster according to this invention are explained with reference to various exemplary embodiments of a guarded holster according to this invention. The basic explanation of the design factors and operating principles of the guarded holster is applicable for the understanding, design, and operation of the guarded holster of this invention.

[0049] Furthermore, it should be appreciated that, for simplicity and clarification, the embodiments of this invention will be described with reference to a semiautomatic-type handgun being secured within the present guarded holster. However, it should be appreciated that the operating principles of the guarded holster of this invention may also be employed to construct holsters or holders for any revolver or semiautomatic-type handgun, edged weapon, less than lethal product (i.e., a taser, pepper spray, mace canister, baton, or the like), or other device, so long as these items have an appropriate edge, surface, or void that may be engaged or blocked by a pivotable guard.

[0050] Furthermore, it is also within the scope of the present invention that the guarded holster may be employed as a holder for tactical accessories, such as ammunition magazines and/or flashlights, as well as for everyday items such as cell phones, personal digital assistants, or the like.

[0051] It should also be appreciated that the terms "handgun", "handgun holster", and "weapon" are used for basic explanation and understanding of the operation of the systems, methods, and apparatuses of this invention. Therefore, the terms "handgun", "handgun holster", and "weapon" are not to be construed as limiting the systems, methods, apparatuses, or applications of this invention.

[0052] Figs. 1-10B show various views of a first, illustrative, non-limiting embodiment of a guarded holster 100 having a retention system according to this invention. It should be appreciated that, in various exemplary embodiments, the

holster 100 is adapted to retain a semiautomatic-type handgun, as illustrated in phantom in Fig. 1. Generally, semiautomatic-type handguns include a slide, a frame, and a hammer and/or firing mechanism and have a front, or muzzle, end and a back, or hammer/firing pin, end. The slide generally includes a barrel, while the frame generally includes a grip, a trigger guard, and a trigger. The trigger guard includes an inner surface, which defines an area wherein the trigger is located and allows a user's finger access to the trigger, and an outer surface, which defines the outer perimeter of the trigger guard.

**[0053]** As illustrated in Figs. 1-10B, the holster 100 includes a holster body 110 defining a cavity 120 for receiving and holding the handgun. The cavity 120 may be formed from any number or combination of walls, including, for example, a single, continuous wall or multiple coupled or joined walls. Alternatively, the cavity 120 may be formed by a material shaped or bent in a substantial "U" shape. Thus, the cavity 120 may be formed by any cavity, space, or platform that is capable of retaining an appropriate portion of the handgun.

**[0054]** In various exemplary embodiments, the holster body 110 comprises at least some of a pair of opposed side walls comprising a first side wall 112 and a second side wall 114. Typically, the first side wall 112 is considered the outer side of the holster and is worn away from the user's body, while the second side wall 114 is considered the inner side of the holster and is worn against or adjacent the user's body.

**[0055]** The holster body 110 may further comprise at least some of a front wall 116 and a rear wall 118. Optionally, the front wall 116 and the rear wall 118 may comprise extended portions of the first side wall 112 and the second side wall 114.

**[0056]** It should also be appreciated that the holster 100 may be formed such that one or more of the first side wall 112, the second side wall 114, the front wall 116, and/or the rear wall 118 is/are sufficient to define the cavity 120 for receiving the handgun and the remaining walls are not included.

[0057] It should be noted that the walls of the holster 100 may be substantially planar. Alternatively, the walls of the holster 100 may be contoured or shaped to better accommodate a specific type or model of handgun (or other item) to be retained within the holster 100.

[0058] The holster 100 may be formed of a substantially rigid material, such as, for example, a polymeric material or a polymeric composite. Alternate materials of construction may include one or more of the following: steel, aluminum, titanium, and/or other metals, as well as various alloys and composites thereof, glass-hardened polymers, polymer or fiber reinforced metals, carbon fiber or glass fiber composites, continuous fibers in combination with thermoset and thermoplastic resins, chopped glass or carbon fibers used for injection molding compounds, laminate glass or carbon fiber, epoxy laminates, woven glass fiber laminates, impregnate fibers, polyester resins, epoxy resins, phenolic resins, polyimide resins, cyanate resins, high-strength plastics, nylon, glass, or polymer fiber reinforced plastics, thermoform and/or thermoset sheet materials, or the like, and/or various combinations of the foregoing.

[0059] In various exemplary embodiments, at least certain components of the holster 100 may be formed of any known or later developed, substantially flexible material(s) such as a polymeric material, leather, foam, foam laminates, natural and man-made (synthetic) fabrics, natural and man-made (synthetic) fabric laminates, moldable honeycomb materials, or the like, and/or various combinations of the foregoing.

[0060] Thus, it should be understood that the material or materials used to form the holster 100 and/or various components of the holster 100 is a design choice based on the desired appearance and/or functionality of the holster 100.

[0061] As illustrated most clearly in Figs. 3 and 7A, the holster 100 may optionally include attachment points 138, which provide means for fastening the holster 100 to a holster holding device such as the holster holding device 105. The

attachment means 139 may be used to attach or couple the holster holding device 105 to the attachment points 138. In various exemplary embodiments, the attachment means 139 may comprise screws, rivets, snap-together parts, eyelets, or any other known or later developed means for attaching or coupling the holster holding device 105 to the attachment points 138.

**[0062]** Alternatively, the attachment points 138 and/or the holster holding device 105 may be replaced by another means for coupling, attaching, or fastening the holster 100 to another device or object. In various exemplary embodiments, the means for fastening the holster may comprise a clip, loop, or hook adapted to be, for example, clipped over a belt 106. In further exemplary embodiments, the means for fastening the holster may comprise one or more quick-disconnect or other couplings provided on or adjacent the second side wall 114 of the holster 100, which may be permanently or removably coupled to corresponding and cooperating coupling(s) provided on a belt, carrier, platform, device, or other object. In still other exemplary embodiments, the holster 100 may comprise an integral belt or one or more connections for attachment to a chest, ankle, leg, shoulder, or other harness or band, or for otherwise securing the holster to a user or the user's apparel.

**[0063]** In various exemplary, non-limiting embodiments, the holster 100 optionally comprises an active retention system 170. The active retention system 170, if included, is capable of retaining a handgun securely within the holster 100 by restricting withdrawal of the handgun from the cavity 120 of the holster 100 until the active retention system 170 is disengaged.

**[0064]** In various exemplary, non-limiting embodiments, the active retention system 170, if included, comprises the latch device as shown and described in U.S. Patent No.: 5,918,784 entitled Quick-release Handgun Holster, the entire disclosure of which is incorporated herein by reference. In still other exemplary embodiments, the active retention system 170 comprises the retention system as shown and

described in U.S. Patent Application No.: 11/030,270 entitled Holster Retention System, the entire disclosure of which is incorporated herein by reference.

**[0065]** In certain exemplary embodiments of the holster 100, one or both of the side walls include optional slots 162 and 164, which define a passive retention portion 160. Although not shown in the present figures, the inner surface of the passive retention portion 160 may optionally include one or more raised or textured areas, which provide for additional frictional engagement between the inner surface of the passive retention portion 160 and the trigger guard of the handgun. One or more retention screws 166 may be tightened or loosened to adjust the degree of frictional retention of the handgun by the passive retention portion 160.

**[0066]** The passive retention portion 160, if included, may be adjusted, via the one or more retention screws 166, to provide an adjustable frictional tension between the passive retention portion 160 and the handgun trigger guard, without increasing the frictional tension between a remaining portion of the holster 100 and the handgun.

**[0067]** As further shown in Figs. 1-10B, the holster 100 includes a pivot guard 140, pivotably coupled to the body 110. The pivot guard 140 is pivotable between a closed position for securing the weapon within the cavity 120, as illustrated, for example, in Figs. 1, 2A, 7A, and 8A, and an open position for removal of the weapon, as illustrated, for example, in Figs. 2B, 2C, 7B, and 8B.

**[0068]** The pivot guard 140 is pivotably coupled to the body 110, via a fulcrum or pivot guard pivot pin 122. In various exemplary embodiments, the pivot guard 140 is pivotably coupled, via the pivot guard pivot pin 122, to a portion of the front wall 116. Alternatively, the pivot guard 140 may be pivotably coupled, via the pivot guard pivot pin 122, to a portion of the first side wall 112 and/or the second side wall 114. In various exemplary embodiments, the pivot guard pivot pin 122 may extend all or part of the way across a width of the holster 100.

[0069] Alternatively, the pivot guard 140 may be pivotably coupled to the body 110, via a snap-mating pivot clamp formed as a portion of the pivot guard 140 and a pivot guard pivot formed as a portion of the front wall 116.

[0070] The pivot guard 140 is biased to the open position by a pivot guard biasing means 124. In various exemplary embodiments, the pivot guard biasing means 124 comprises a portion of spring steel or a spring-biased coil. Alternatively, the pivot guard biasing means 124 may comprise an extension or finger that extends from either the pivot guard 140 or a portion of the body 110 and provides a biasing force to the pivot guard 140 relative to the body 110.

It should be appreciated that any suitable biasing means, element, or mechanism may be used to form the biasing means 124. For example, in various illustrative, non-limiting embodiments of this invention, the biasing means 124 may comprise a portion of spring steel, a helical spring, a compression coil spring, a cylindrical coil spring, a conical coil spring, a tension coil spring, a leaf spring, a V-spring, a cantilever spring, a spring washer, a flexible extension of the pivot guard 140 or a portion of the body 110, a stretched or tensioned material, such as, for example, a rubber band, or any other element, material, or mechanism usable to bias the pivot guard 140 relative to the body 110.

[0071] It should be appreciated that the overall size, shape, and thickness of the biasing means 124 will vary depending on the type and rigidity of the particular material used to form the biasing means 124

[0072] In still other exemplary embodiments, the pivot guard pivot pin 122 and the pivot guard biasing means 124 comprise a biased portion of a material that couples the pivot guard 140 to the body 110.

[0073] In various exemplary embodiments, the pivot guard 140 comprises a pivot guard stop 144, which corresponds to a pivot guard travel guide 134 formed in the body 110. The pivot guard stop 144 protrudes into the pivot guard travel guide 134 such that the pivot guard travel guide 134 defines an arc of rotation of the pivot

guard 140 relative to the body 110. In various exemplary embodiments, the pivot guard 140 comprises two pivot guard stops 144, each of which corresponds to a pivot guard travel guide 134 formed in the body 110. As shown in the drawing figures, the pivot guard 140 includes a first pivot guard stop 144, which corresponds to a pivot guard travel guide 134 formed in the first side wall 112, and a second pivot guard stop 144', which corresponds to a pivot guard travel guide 134' formed in the second side wall 114.

**[0074]** Alternatively, the positions of the pivot guard stop 144 and pivot guard travel guide 134 may be reversed such that the body 110 includes a pivot guard stop (not shown), which corresponds to a pivot guard travel guide (not shown) formed in the pivot guard 140. In these exemplary embodiments, the pivot guard stop protrudes into the pivot guard travel guide such that the pivot guard travel guide defines an arc of rotation of the pivot guard 140 relative to the body 110. The body 110 may include a first pivot guard stop (not shown) formed in the first side wall 112, which corresponds to a pivot guard stop (not shown), and a second pivot guard stop (not shown) formed in the second side wall 114, which corresponds to a pivot guard stop (not shown).

**[0075]** The pivot guard release lever 150 includes a first side facing generally outward from the holster 100, away from the cavity 120 formed by the holster 100, and a second side facing toward the cavity 120 formed by the holster 100. The pivot guard release lever 150 comprises at least some of a thumb/finger engagement portion 152 and a pivot guard engagement portion 154. The thumb/finger engagement portion 152 and the pivot guard engagement portion 154 are generally separated by a fulcrum or release lever pivot pin 158.

**[0076]** The thumb/finger engagement portion 152 may be smooth and non-textured such that the thumb/finger engagement portion 152 will not impede the user's thumb/finger as the user's thumb/finger slides across the surface of the thumb/finger engagement portion 152, establishes a grip on the frame of the

handgun, applies a pivoting force to the pivot guard release 150, or pivots the pivot guard release 150 to a pivot guard release position. Alternatively, the first side of the thumb/finger engagement portion 152 may include a textured portion (not shown) so that the user's thumb/finger does not easily slip off of the thumb/finger engagement portion 152 or so that the thumb/finger engagement portion 152 may be distinguished tactilely from other portions of the pivot guard release lever 150 and/or the holster 100.

**[0077]** In various exemplary, non-limiting embodiments, the pivot guard release lever 150 is pivotally connected to the second side wall 114, via the release lever pivot pin 158. The release lever pivot pin 158 may be positioned substantially parallel to a vertical axis of the holster 100, substantially perpendicular to a vertical axis of the holster 100, at a substantially acute angle relative to a vertical axis of the holster 100, or at a substantially obtuse angle relative to a vertical axis of the holster 100. Thus, the release lever pivot pin 158 may be positioned at any angle relative to a vertical axis of the holster 100.

**[0078]** It should be appreciated that the release lever pivot pin 158 may extend either all or part of the way across the width of the pivot guard release lever 150.

**[0079]** In certain exemplary embodiments, as illustrated in Figs. 5A and 5B, the pivot guard release lever 150 may include a first protrusion 158' and a second protrusion 158' that replaced the release lever pivot pin 158 and extend from the pivot guard release lever 150. Corresponding first and second indentions, indentations, notches, grooves, or dimples 131' may be formed in the first side wall 112. In these exemplary embodiments, the first and second protrusions 158' are formed so as to operate in cooperating relationship with the first and second dimples 131' such that the pivot guard release lever 150 may be pivotally attached, via the first and second protrusions 158' and the first and second dimples 131', to the first side wall 112 approximately between a thumb/finger engagement portion 152 and

the pivot guard engagement portion 154. Thus, the pivot guard release lever 150 is able to snap fit into the first side wall 112.

**[0080]** Alternatively, the positions of the first and second protrusions 158' and the first and second dimples 131' may be reversed, such that the pivot guard release lever 150 may include first and second dimples while the first sidewall 110 includes first and second protrusions. In these exemplary embodiments, the first and second dimples are formed so as to operate in cooperating relationship with the first and second protrusions such that the pivot guard release lever 150 may be pivotably attached, via the first and second dimples and the first and second protrusions, to the first side wall 112 approximately between the thumb/finger engagement portion 152 and the pivot guard engagement portion 154

**[0081]** In various exemplary embodiments, an optional ridge 135 may be formed on the first side wall 112 around at least a portion of the pivot guard release lever 150. Generally, the ridge 135 does not contact the pivot guard release lever 150, but provides a perimeter around at least a portion of the pivot guard release lever 150 to reduce the likelihood of the pivot guard release lever 150 being inadvertently manipulated and to aid in the proper placement of a user's the thumb or finger on the thumb/finger engagement portion 152 of the pivot guard release lever 150. The ridge 135 may include a pivot guard release lever anti-snag portion 135', which is formed so as to keep items from accidentally snagging or hooking the pivot guard release lever 150.

**[0082]** The ridge 135 may include a textured portion (not shown), such that the ridge 135 may be distinguished tactilely from other portions of the holster 100 or the pivot guard release lever 150.

**[0083]** While Figs. 1-10B show the pivot guard release lever 150 coupled to the second side wall 114, it should be appreciated that in various exemplary embodiments, the pivot guard release lever 150 may be coupled to the first side wall 112.

[0084] The pivot guard engagement portion 154 includes a pivot guard locking portion 155, formed of a protrusion on the second side of the pivot guard engagement portion 154. In various exemplary embodiments, the pivot guard locking portion 155 includes a substantially planar portion 156. The pivot guard locking portion 155 may also include an optional detent 155' and a ramp portion 157.

[0085] The pivot guard release lever 150 is pivotable between a pivot guard retention position for securing the pivot guard 140 in the closed position and a pivot guard release position for releasing the pivot guard 140 and allowing the pivot guard 140 to pivot to the open position. In various exemplary embodiments, the pivot guard release lever 150 is biased to the pivot guard retention position whether the pivot guard 140 is in the closed position or the open position.

[0086] In various exemplary embodiments, the pivot guard release lever 150 is biased to the pivot guard retention position by, for example, a biasing means 159. In various exemplary embodiments, the biasing means 159 comprises a portion of spring steel or a spring-biased coil. Alternatively, the biasing means 159 may comprise an extension or finger that extends from either the pivot guard release lever 150 or a portion of the body 110 that provides a biasing force to the pivot guard release lever 150 relative to the body 110.

It should be appreciated that any suitable biasing means, element, or mechanism may be used to form the biasing means 159. For example, in various illustrative, non-limiting embodiments of this invention, the biasing means 159 may comprise a portion of spring steel, a helical spring, a compression coil spring, a cylindrical coil spring, a conical coil spring, a tension coil spring, a leaf spring, a V-spring, a cantilever spring, a spring washer, a flexible extension of the pivot guard release lever 150 or a portion of the body 110, a stretched or tensioned material, such as, for example, a rubber band, or any other element, material, or mechanism usable to bias the pivot guard release lever 150.

[0087] It should be appreciated that the overall size, shape, and thickness of the biasing means 159 will vary depending on the type and rigidity of the particular material used to form the biasing means 159

[0088] When the pivot guard release lever 150 is in the pivot guard retention position, the pivot guard locking portion 155 protrudes from the second side of the pivot guard engagement portion 154, and extends through an aperture 132 in the second side wall 114 of the holster body 110, into a portion of the cavity 120 formed in the holster 100. When the pivot guard 140 is in the closed position and the pivot guard release 150 is in the pivot guard retention position, the pivot guard locking portion 155 protrudes from the second side of the pivot guard release 150, through an aperture 132 in the second side wall 114 of the holster body 110, and engages a pivot guard locking means 142 formed in the pivot guard 140, thereby maintaining the pivot guard 140 in the closed position.

[0089] In various exemplary embodiments, the pivot guard locking means 142 comprises an aperture formed in the pivot guard 140. Alternatively, the pivot guard locking means 142 may comprise an indent or notch formed in the pivot guard 140.

[0090] The optional detent 155', if included, is formed so as to mate with an optional corresponding inner surface protrusion 142' formed in the pivot guard locking means 142. Since the pivot guard 140 is biased to the open position, the mating of the detent 155' and the inner surface protrusion 142' provides an additional measure of resistance to the bias of the pivot guard release 150.

[0091] When the bias of the pivot guard release 150 is overcome and the pivot guard release 150 is pivoted from the pivot guard retention position to the pivot guard release position, the pivot guard locking portion 155 is withdrawn from the pivot guard locking means 142 and the pivot guard 140 is allowed to pivot to the open position. When the pivot guard 140 is in the open position, the handgun may be removed from the holster 100.

[0092] It should be appreciated that if the optional active retention system 170 is included, the handgun may not be removed from the holster 100 until the active retention system 170 is disengaged.

[0093] When the pivot guard 140 is in the open position and the pivoting force is removed from the pivot guard release 150, the pivot guard release 150 returns to the biased pivot guard retention position. In the pivot guard retention position, the pivot guard locking portion 155 protrudes through the aperture 132 in the second side wall 114 of the holster body 110 into the cavity 120.

[0094] In various illustrative, non-limiting embodiments of this invention, when the pivot guard 140 is in the open position, the substantially planar portion 156 of the pivot guard locking portion 155 protrudes into the cavity 120 so as to block the pivot guard 140 from being pivoted to the closed position.

[0095] In certain exemplary embodiments, particularly those in which the ramp portion 157 is included, when the handgun is returned to the cavity 120, the slide or other portion of the inserted handgun may contact a terminal end of the pivot guard locking portion 155 and displace the pivot guard locking portion 155 sufficient to pivot the pivot guard release 150 such that the substantially planar portion 156 of the pivot guard locking portion 155 is displaced out of the cavity 120. Thus, the substantially planar portion 156 no longer protrudes far enough into the cavity 120 to block the pivot guard 140 from being pivoted to the closed position.

Otherwise, if the ramp portion 157 is not included and/or the terminal end of the pivot guard locking portion 155 does not protrude far enough into the cavity 120 to contact the slide or any other portion of an inserted handgun, the pivot guard 140 cannot be moved to the closed position unless the user appropriately manipulates the pivot guard release 150.

In various illustrative, non-limiting embodiments of this invention, the holster 100 includes at least one biased pivot guard lock 136. An inner surface of the pivot guard lock 136 includes one or more raised areas, or pivot guard lock

protrusions 137. In the naturally biased position, a portion of the pivot guard lock 136 and the pivot guard lock protrusion 137 protrude into the cavity 120 when the pivot guard 140 is in the open position.

**[0096]** Thus, when the pivot guard 140 pivots to the open position, the pivot guard lock 136, if included, returns to a naturally biased pivot guard locking position. In the pivot guard locking position, a portion of the pivot guard lock 136 and the pivot guard lock protrusion 137 protrude into the cavity 120.

**[0097]** In various illustrative, non-limiting embodiments of this invention, when the pivot guard 140 is in the open position, a portion of the pivot guard lock 136 protrudes into the cavity 120 so as to block the pivot guard 140 from being pivoted to the closed position.

**[0098]** When the handgun is returned to the cavity 120, the slide or other portion of the inserted handgun contacts an end of the pivot guard lock protrusion 137 and displaces the pivot guard lock protrusion 137 sufficient to flex the pivot guard lock 136 such that the pivot guard lock 136 is displaced out of the cavity 120 sufficient to allow the pivot guard 140 to be pivoted to the closed position.

**[0099]** During use of the holster 100, the holster 100 is initially presented in an empty condition with the pivot guard 140 biased to the open position. When in the open position, the pivot guard 140 is blocked by the substantially planar portion 156 of the pivot guard locking portion 155, and/or the portion of the pivot guard lock 136, from being pivoted to the closed position.

**[00100]** During use or operation of the holster 100, as a user begins to holster a handgun in the holster 100, the handgun is inserted into the cavity 120 of the holster, muzzle first, and is guided into position by at least some of the first side wall 112, the second side wall 114, the front wall 116, and the rear wall 118.

**[00101]** In certain exemplary embodiments, wherein the ramp surface 157 is included and the terminal end of the pivot guard locking portion 155 protrudes far enough into the cavity 120 to make contact with the slide or another portion of an

inserted handgun, as the handgun is inserted further into the cavity 120, an outer surface of the handgun contacts the terminal end of the pivot guard locking portion 155 and/or an end of the pivot guard lock protrusion 137. When the handgun is seated in the cavity 120, contact between the outer surface of the handgun and the terminal end of the pivot guard locking portion 155 displaces the pivot guard locking portion 155 from the cavity 120 a sufficient amount such that the substantially planar portion 156 no longer protrudes far enough into the cavity 120 to block the pivot guard 140 from being pivoted to the closed position.

**[00102]** Likewise, contact between the outer surface of the handgun and the end of the pivot guard lock protrusion 137 displaces the pivot guard lock protrusion 137 sufficient to flex the pivot guard lock 136, if included, such that the pivot guard lock 136 is displaced out of the cavity 120 sufficient to allow the pivot guard 140 to be pivoted to the closed position.

**[00103]** When the handgun in seated in the cavity 120 and the pivot guard 140 is manually pivoted towards the closed position, a portion of the pivot guard 140 contacts the ramp portion 157 of the pivot guard locking portion 155. The shape of the ramp portion 157 allows the pivot guard locking portion 155 to be displaced from the cavity 120 as a contact portion of the pivot guard 140 rides along the surface of the ramp portion 157.

**[00104]** As the pivot guard 140 continues to be pivoted towards the closed position, the terminal end of the pivot guard locking portion 155 rides along a contact portion of the pivot guard 140, the pivot guard 140 continues to displace the pivot guard locking portion 155 from the cavity 120, and the pivot guard release 150 continues to pivot until the terminal end of the pivot guard locking portion 155 passes a point of contact with the pivot guard 140 and the pivot guard locking portion 155 engages the pivot guard locking means 142.

**[00105]** When the pivot guard locking portion 155 engages the pivot guard locking means 142, the bias of the pivot guard release 150 causes the pivot guard

release 150 to return to the biased pivot guard retention position, as illustrated in Figs. 2A and 2C.

**[00106]** In those embodiments wherein the ramp surface 157 is not included and/or the terminal end of the pivot guard locking portion 155 does not protrude far enough into the cavity 120 to make contact with the slide or another portion of an inserted handgun, when the handgun is fully inserted into the cavity 120, the user depresses the thumb/finger engagement portion 152 such that pivot guard release 150 pivots until the terminal end of the pivot guard locking portion 155 is removed sufficiently from the cavity 120, such that the pivot guard 140 can be rotated into place. Once the pivot guard 140 is rotated into place, and the user releases the thumb/finger engagement portion 152, the bias of the pivot guard release 150 causes the pivot guard release 150 to return to the biased pivot guard retention position.

**[00107]** In either case, when the pivot guard 140 is in the closed position and the pivot guard release 150 is biased to the pivot guard retention position, the pivot guard locking portion 155 protrudes, from the pivot guard release 150, through the aperture 132 in the second side wall 114 of the holster body 110, and engages the pivot guard locking means 142 formed in the pivot guard 140, thereby maintaining the pivot guard 140 in the closed position.

**[00108]** Thus, the handgun is secured in the cavity 120 of the holster by operation of the pivot guard locking portion 155 maintaining the pivot guard 140 in a closed position, thereby blocking removal of the handgun. While the handgun is fully seated in the cavity 120, with the pivot guard 140 maintained in the closed position, removal of the handgun is not permitted, as the pivot guard 140 covers at least a portion of the handgun (i.e., the rear slide, the hammer, or the backstrap, depending on the type and model of firearm) and does not allow the handgun to pass by.

**[00109]** In order to release and unholster the handgun, the user merely grasps the handgun in a manner to establish a normal grip on the handgun. As the user's grip is established, the user's thumb sweeps career of the slide and contacts and applies

pressure to the thumb/finger engagement portion 152, as illustrated in Fig. 6, such that the pivot guard release lever 150 is pivoted to a pivot guard release position, as illustrated in Fig. 2B.

**[00110]** As the bias of the pivot guard release 150 is overcome, the pivot guard release 150 is pivoted to the pivot guard release position and the pivot guard locking portion 155 is withdrawn from the pivot guard locking means 142. When the pivot guard release 150 is pivoted sufficiently such that the pivot guard locking portion 155 is sufficiently withdrawn from the pivot guard locking means 142 and the pivot guard locking portion 155 clears or disengages from the pivot guard locking means 142, the bias of the pivot guard 140 automatically pivots the pivot guard 140 to the open position.

**[00111]** When the pivot guard 140 is in the open position, a removal force may be applied to the handgun and the handgun may be removed from the holster 100.

**[00112]** It should be appreciated that if any additional optional active retention system(s) is/are included, such as, for example, the active retention system 170, the handgun may not be removed from the holster 100 until the pivot guard 140 is in the open position and any active retention system(s) is/are disengaged or overcome.

**[00113]** Figs. 11-14 show an additional exemplary embodiment of a handgun holster 100 having a retention system according to this invention. As illustrated in Figs. 11-14, the pivot guard 140 (as illustrated in Figs. 1-10B) is replaced by a pivot guard 240. Additionally, the thumb/finger engagement portion 152 includes an extended thumb/finger engagement portion 252.

**[00114]** The pivot guard 240 is formed so as to extend over at least a portion of the rear of the slide of an inserted handgun and partially or completely cover an exposed hammer 525 of the inserted handgun 500. In various exemplary embodiments, the pivot guard 240 may be formed so as to accommodate an exposed hammer in either a hammer cocked (i.e. condition one) position or a hammer down

(i.e. condition to work condition three) position within a cavity 220 formed in the pivot guard 240.

**[00115]** It should be appreciated that the features of the pivot guard 240 may be utilized in connection with any of the exemplary embodiments of the holster 100 including the embodiments illustrated in Figs. 1-10B and Figs. 11-14.

**[00116]** As further illustrated in Figs. 11-14, the thumb/finger engagement portion 152 includes an extended portion 252. As shown, the extended portion 252 extends beyond a portion of the body 110 (in this embodiment, the second side wall 114) of the holster 100 so as to be positioned in closer proximity to the natural position of the users thumb/finger as the user's hand contacts the frame of the handgun 500 to establish a proper grip on the handgun 500. Therefore, inclusion of the extended portion 252 allows the user to apply a pivoting force to the pivot guard release lever 150 while more easily establishing a proper grip on the handgun 500.

**[00117]** In various exemplary embodiments, as illustrated, at least a portion of the extended portion 252 includes a textured portion so that the extended portion 252 may be distinguished tactilely from other portions of the thumb/finger engagement portion 152, the pivot guard release lever 150, and/or the holster 100.

**[00118]** Alternatively, the extended portion 252 may be smooth and non-textured such that contact with the extended portion 252 will not impede the user's thumb/finger as the user's thumb/finger applies a pivoting force to the pivot guard release 150, pivots the pivot guard release 150 to a pivot guard release position, and/or establishes a grip on the frame of the handgun 500.

**[00119]** It should be appreciated that the extended portion 252 may be utilized in connection with any of the exemplary embodiments of the holster 100 including the embodiments illustrated in Figs. 1-10B and Figs. 11-14.

**[00120]** As further illustrated in Figs. 11-14, the holster body 110 comprises at least one optional body stop notch 234 formed in the body 110, which corresponds to at least one optional pivot guard stop 244, formed in the pivot guard 240. The

pivot guard stop 244 protrudes into the corresponding body stop notch 234 such that the interaction of the pivot guard stop 244 and the body stop notch 234 defines an arc of rotation of the pivot guard 240 relative to the body 110.

**[00121]** Figs. 11-14 also illustrate a locking arrangement for the pivot guard 240. As illustrated in Figs. 11, 12, 13B, and 14, the pivot guard 240 is formed with locking extensions 243 and 243' that extend from each side of the pivot guard 240. Corresponding receiving or retaining channels 217 and 217' are formed within the cavity 120 on either side of the holster body 110. When the pivot guard 240 is in the closed position, each of the locking extensions 243 and 243' of the pivot guard 240 extends into the corresponding retaining channels 217 and 217' of the holster body 110.

**[00122]** In this manner, when the pivot guard 240 is in the closed position, the locking extensions 243 and 243' extend into the retaining channels 217 and 217' and the interaction of the locking extensions 243 and 243' and the corresponding retaining channels 217 and 217' maintains the pivot guard 240 in a relatively fixed, lateral position relative to the first side wall 116 and the second side wall 114 of the holster body 110. Thus, the top ends of the holster body 110 are not easily sprung or forced apart when the pivot guard 240 is in the closed position.

**[00123]** As illustrated in Fig. 13A, in various exemplary embodiments, the pivot guard 240 may only be formed with a single locking extension 243 that extends from one side of the pivot guard 240. In these exemplary embodiments, a single, corresponding receiving or retaining channel 217 may be formed within the cavity 120.

**[00124]** It should be understood that the locking extension(s) and retaining channel(s) may be utilized in connection with any of the exemplary embodiments of the holster 100 including the embodiments illustrated in Figs. 1-10B and Figs. 11-14.

**[00125]** While this invention has been described in conjunction with the exemplary embodiments outlined above, it is evident that many alternatives, modifications, and variations will be apparent to those skilled in the art. Such adaptations and modifications should and are intended to be comprehended within the meaning and range of equivalents of the disclosed exemplary embodiments. It is to be understood that the phraseology of terminology employed herein is for the purpose of description and not of limitation. Accordingly, the foregoing description of the exemplary embodiments of the invention, as set forth above, are intended to be illustrative, not limiting. Various changes, modifications, and/or adaptations may be made without departing from the spirit and scope of this invention.

2009269134 05 Aug 2013

**The claims defining the invention are as follows:**

1. A holster for a handgun, comprising:

a holster body defining a cavity for receiving a handgun;

a pivot guard pivotably coupled to the holster body, wherein the pivot guard is pivotable between a closed position and an open position, wherein the pivot guard is biased to the open position by a biasing means, wherein the pivot guard includes a locking means for receiving at least a portion of a locking portion of a release lever for securing the pivot guard in the closed position, and wherein the pivot guard includes locking extensions that extend from each side of the pivot guard, and wherein the holster body includes corresponding retaining channels formed within the cavity such that when the pivot guard is in the closed position, each locking extension of the pivot guard extends into a corresponding retaining channel of the holster body; and

the release lever coupled to the holster body for releasably securing the pivot guard in the closed position, wherein the release lever includes at least some of the locking portion and a thumb/finger engagement portion, wherein the release lever is biased to a pivot guard retention position such that the locking portion protrudes into the locking means so as to secure the pivot guard in the closed position, but wherein the release lever is capable of being pivoted to a release position when a pivoting force is applied to the thumb/finger engagement portion such that the locking portion is sufficiently withdrawn from the locking means so as to allow the pivot guard to pivot to the open position.

2. The holster of claim 1, wherein the locking portion prevents the pivot guard from pivoting to the closed position when the handgun is absent from the cavity unless a sufficient pivoting force is applied to the thumb/finger engagement portion such that the locking portion is sufficiently withdrawn from the locking means so as to allow the pivot guard to be pivoted to the closed position.

3. The holster of claim 1 or claim 2, wherein the holster body comprises a first side wall, a second side wall, a front wall, and a rear wall.

4. The holster of any one of claims 1 to 3, wherein the walls of the holster are contoured to accommodate a specific model of handgun.

5. The holster of any one of the preceding claims, wherein the pivot guard is pivotably attached to opposed side walls of the holster body.

6. The holster of any one of claims 1 to 4, wherein the pivot guard is pivotably attached to a front wall of the holster body.

7. The holster of any one of the preceding claims, wherein the pivot guard is pivotably coupled to the holster body, via a pivot pin.

8. The holster of any one of the preceding claims, wherein the locking means comprises an aperture formed in the pivot guard.

9. The holster of any one of the preceding claims, wherein the holster body further comprises at least one attachment point for coupling the holster to a holster holding device.

10. The holster of any one of the preceding claims, wherein the holster further comprises an active retention system.

11. The holster of any one of claims 1 to 9, wherein the holster further comprises a passive retention portion.

12. The holster of any one of the preceding claims, wherein the biasing means comprises a portion of spring steel.

13. The holster of any one of the preceding claims, wherein the pivot guard is formed so as to extend over at least a portion of the rear of a slide of an inserted handgun and at least partially cover a hammer of the inserted handgun when in the closed position.

14. The holster of any one of the preceding claims, wherein the holster body comprises at least one body stop notch formed in the holster body and at least one pivot guard stop formed in the pivot guard, wherein the pivot guard stop

2009269134 05 Aug 2013

protrudes into the body stop notch such that the body stop notch defines an arc of rotation of the pivot guard relative to the holster body.

15. The holster of any one of the preceding claims, wherein thumb/finger engagement portion extends so as to be positioned in close proximity to the natural position of a user's thumb/finger as a user's hand contacts a frame of the handgun to establish a proper grip on the handgun.

16. The holster of any one of the preceding claims, wherein thumb/finger engagement portion extends beyond a portion of the holster body of the holster.

17. The holster of any one of the preceding claims, wherein at least a portion of the thumb/finger engagement portion is textured.

18. The holster of any one of the preceding claims, wherein the locking portion includes a substantially planar portion.

19. The holster of any one of the preceding claims, wherein the locking portion includes a substantially planar portion and a ramp portion.

20. A holster for a handgun, said holster substantially according to any one embodiment as hereinbefore described with reference to the accompanying drawings.

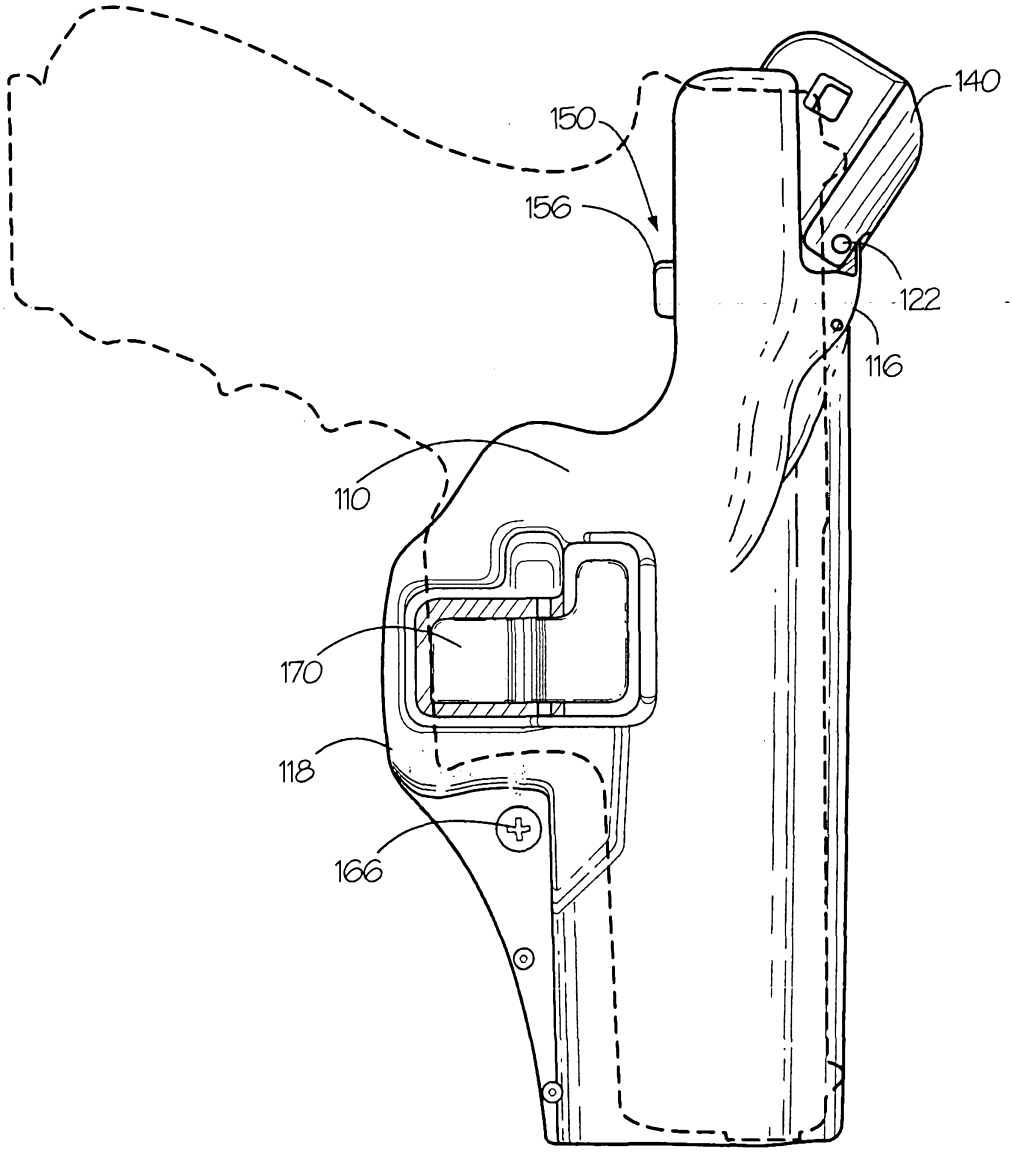


*Fig. 1*

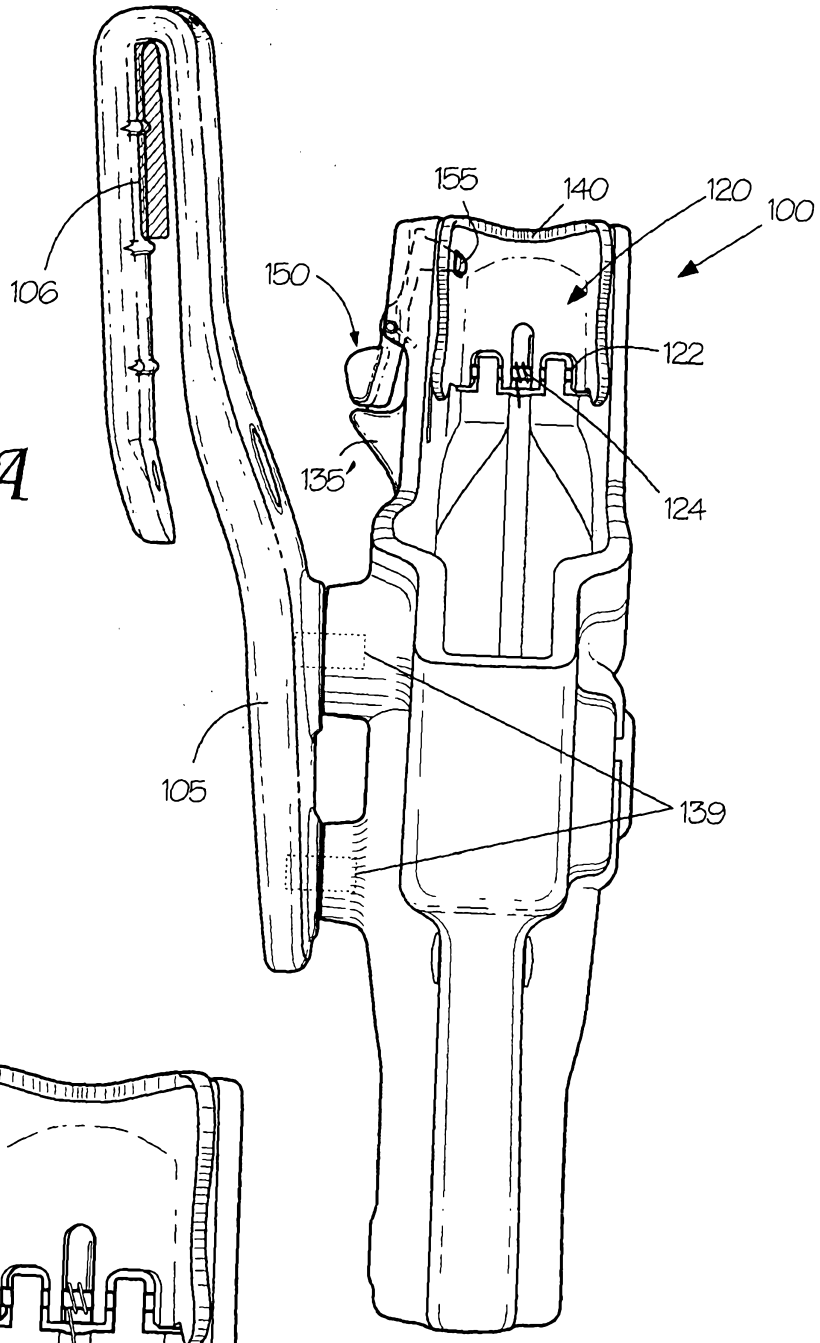


Fig. 2A

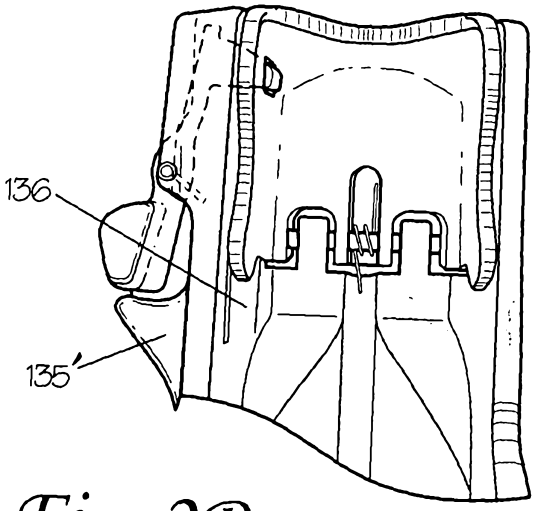


Fig. 2B

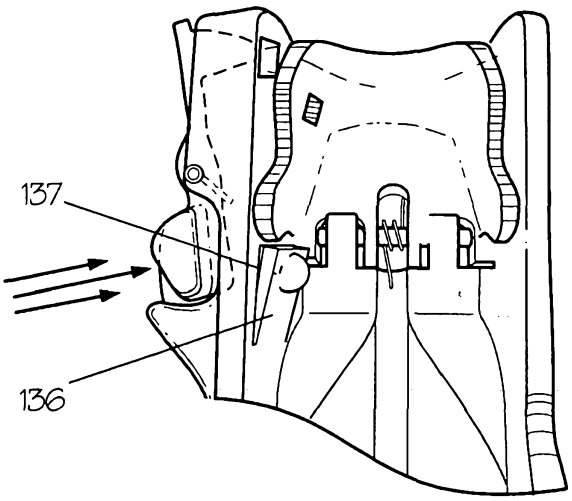


*Fig. 2C*

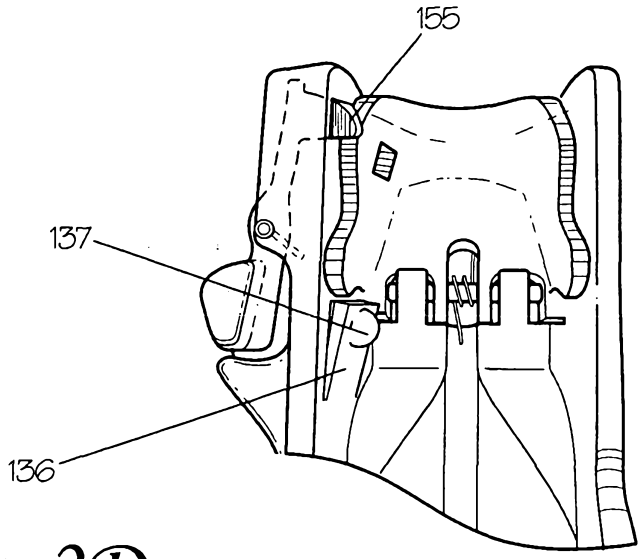


*Fig. 2D*

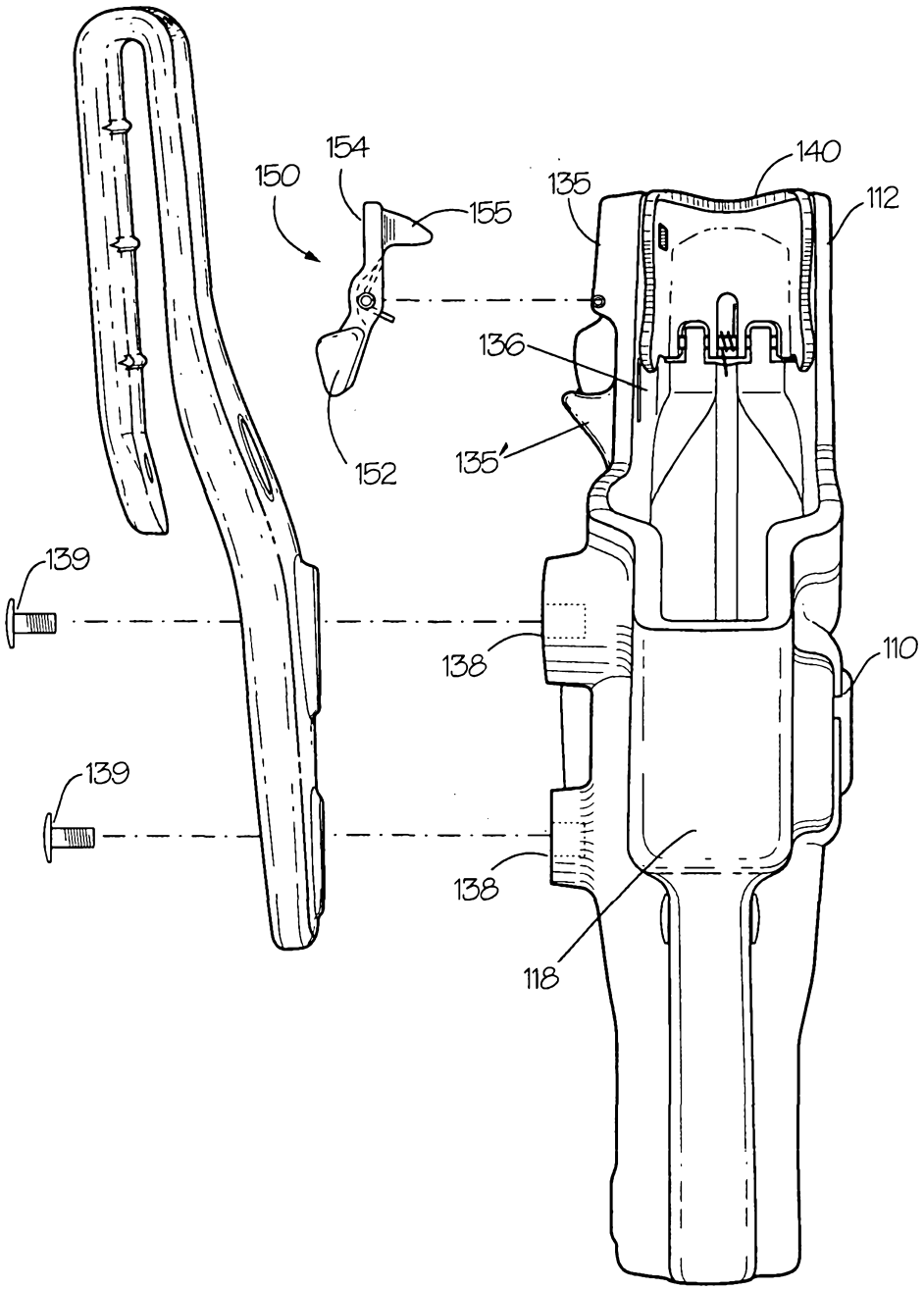


*Fig. 3*

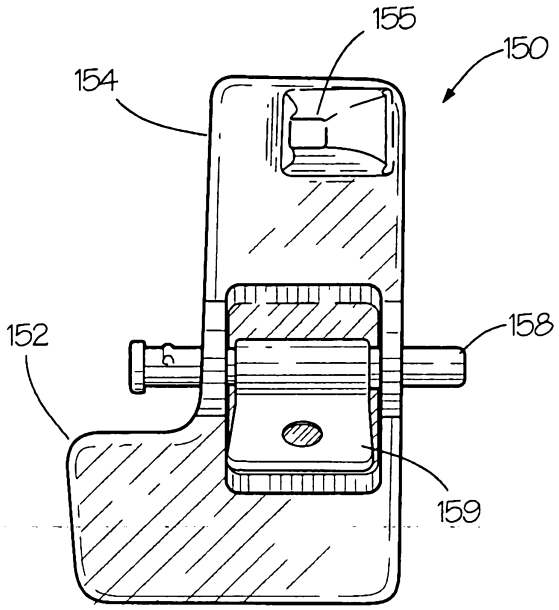


Fig. 4A

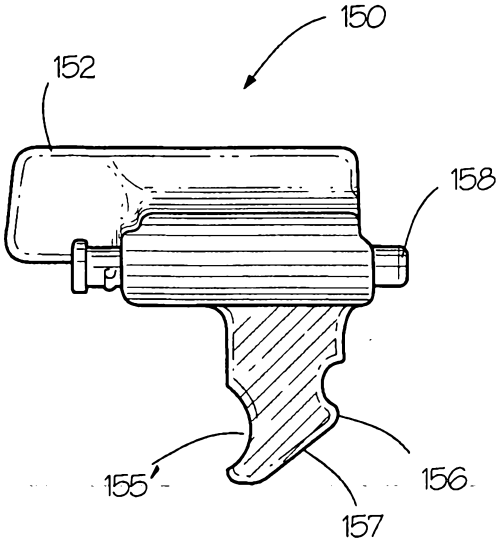


Fig. 4B

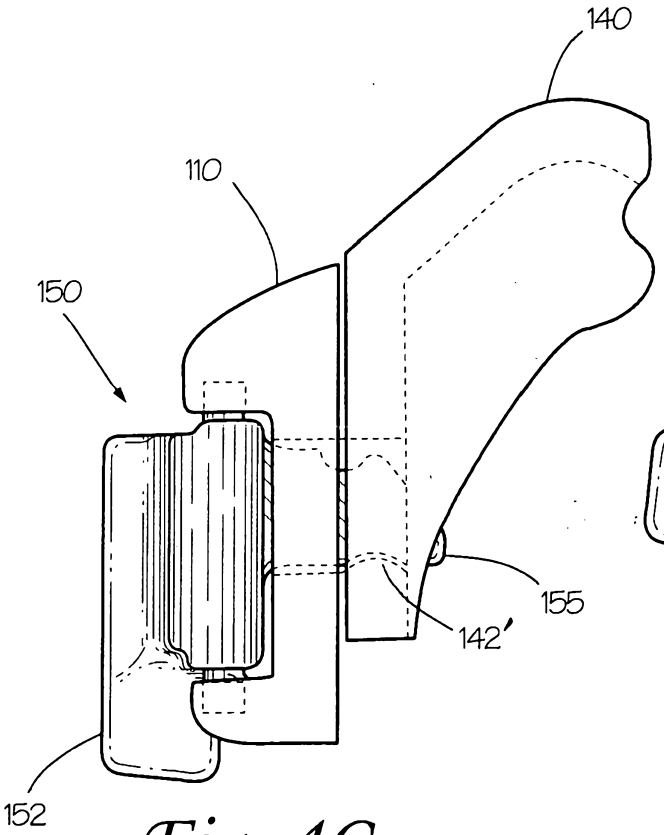


Fig. 4C

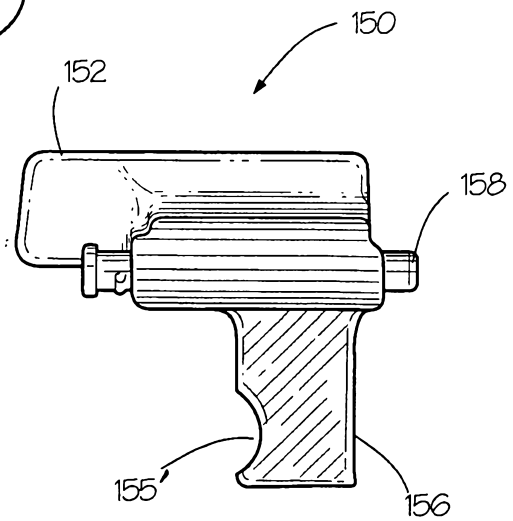


Fig. 4D

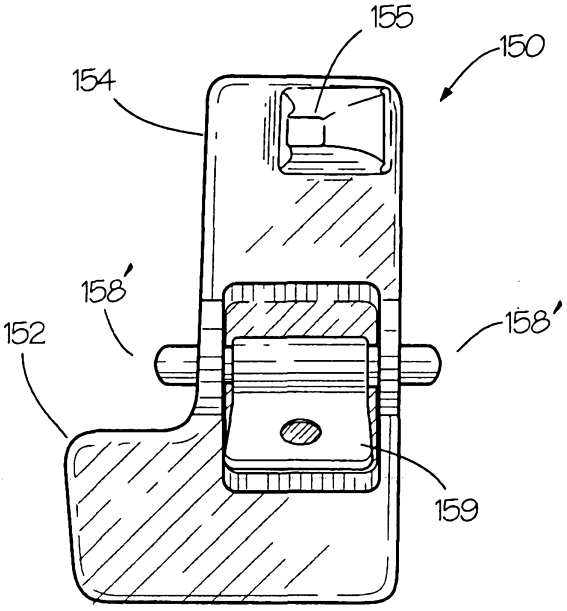


Fig. 5A

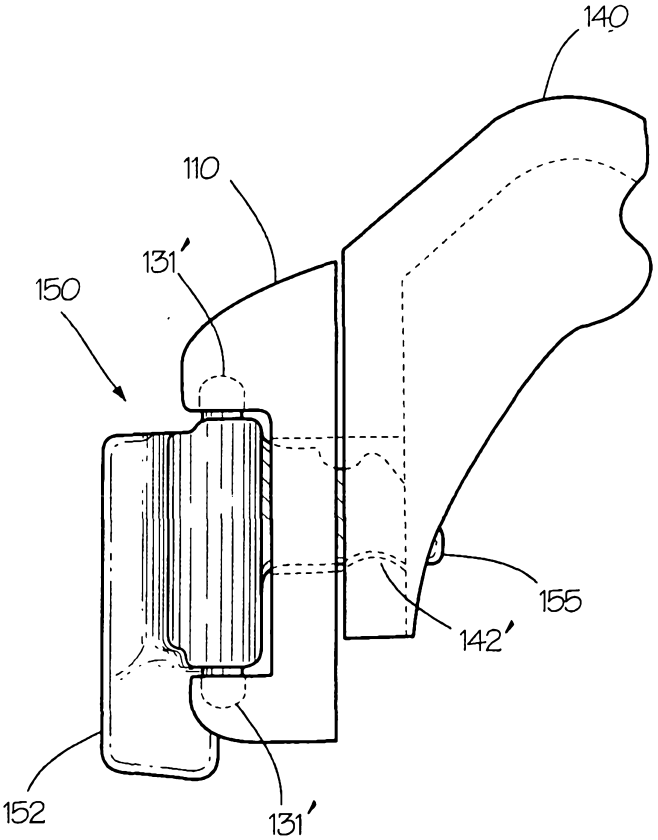


Fig. 5B

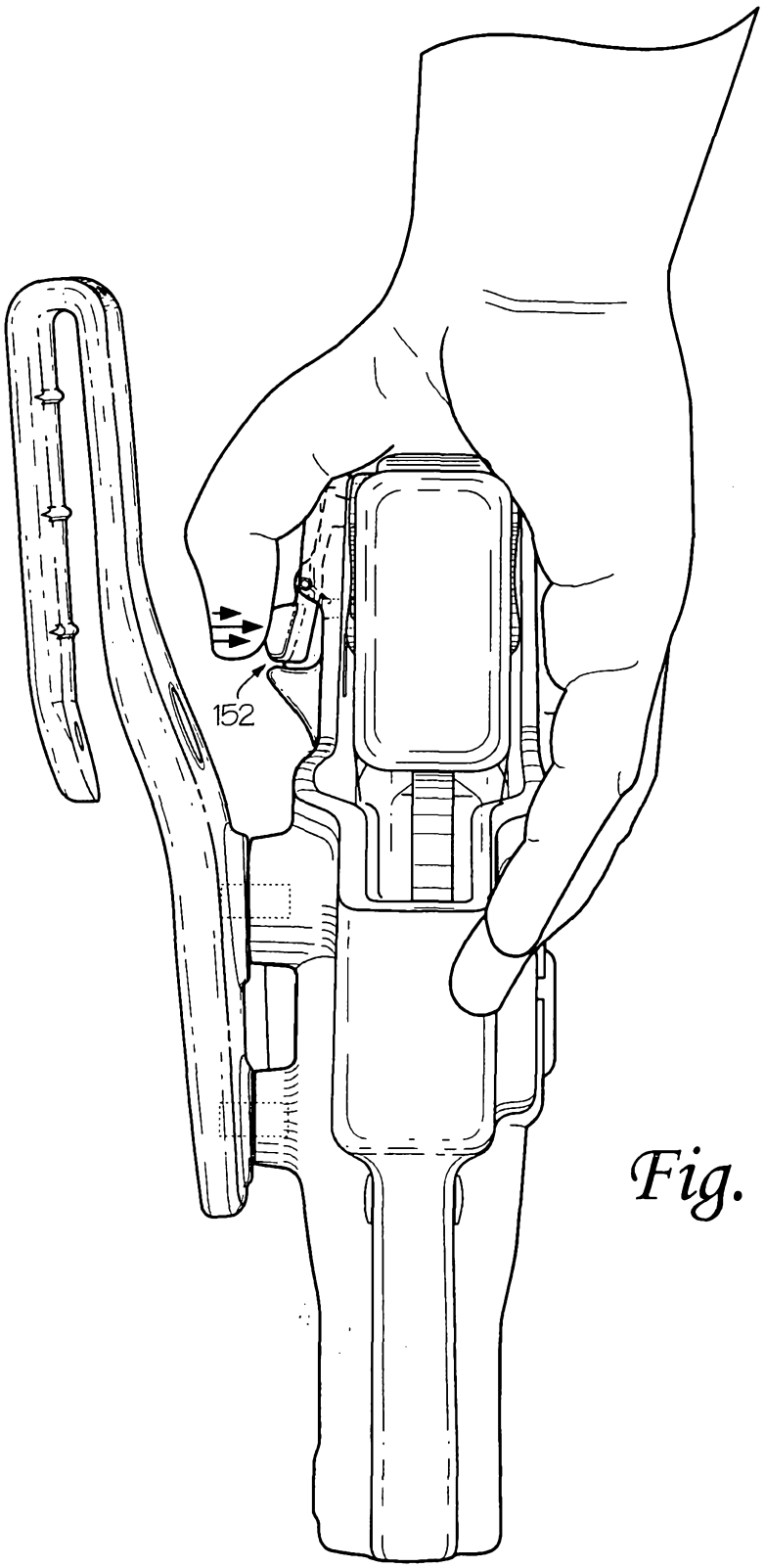


*Fig. 6*

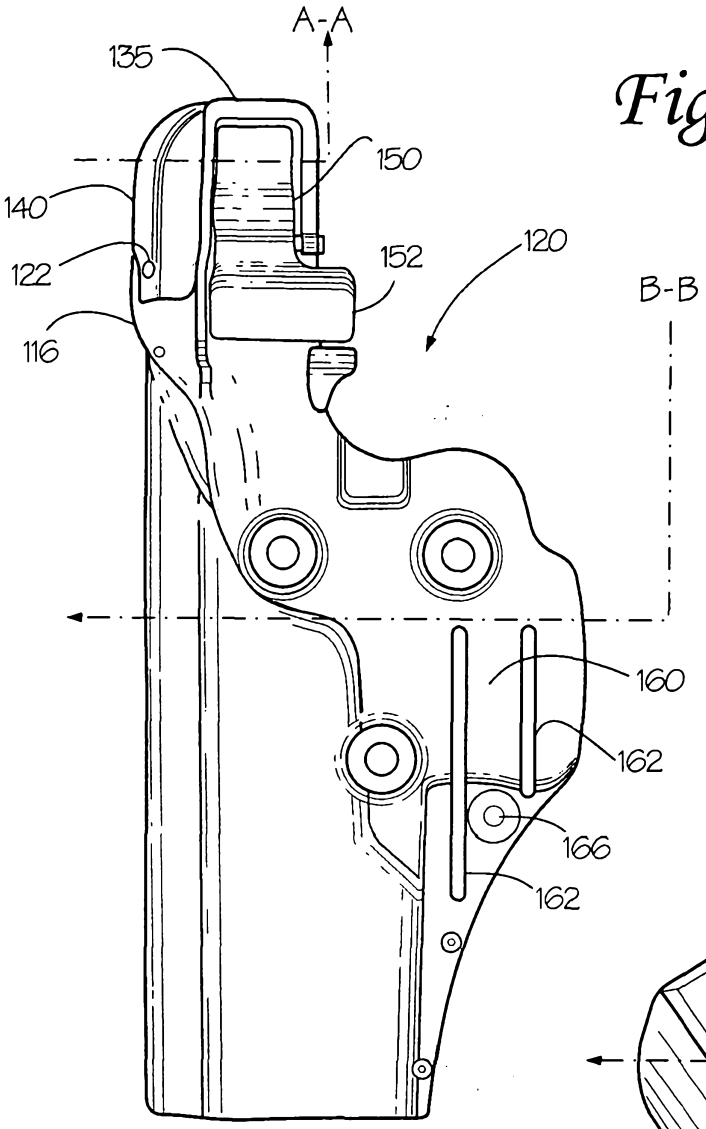
A-A
135
150
140
122
152
120
116
B-B
160
162
166
162

Fig. 7A

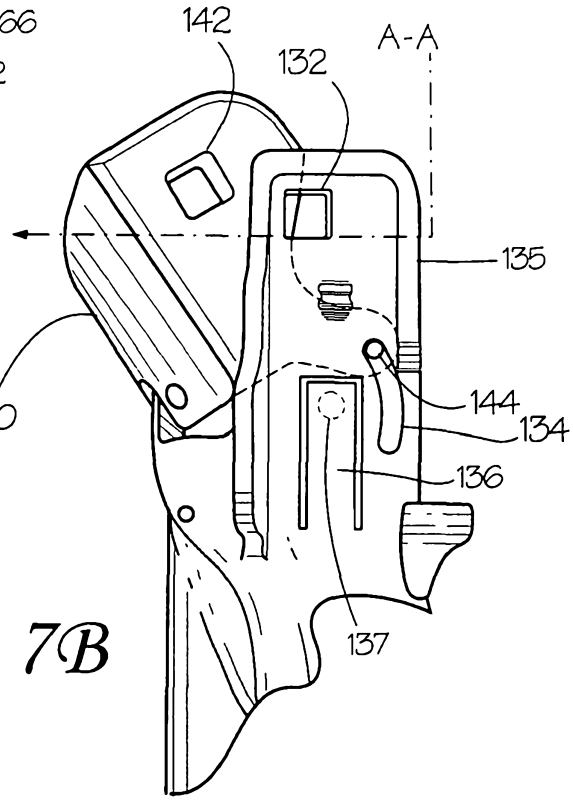
142
132
A-A
135
140
144
134
136
137

Fig. 7B

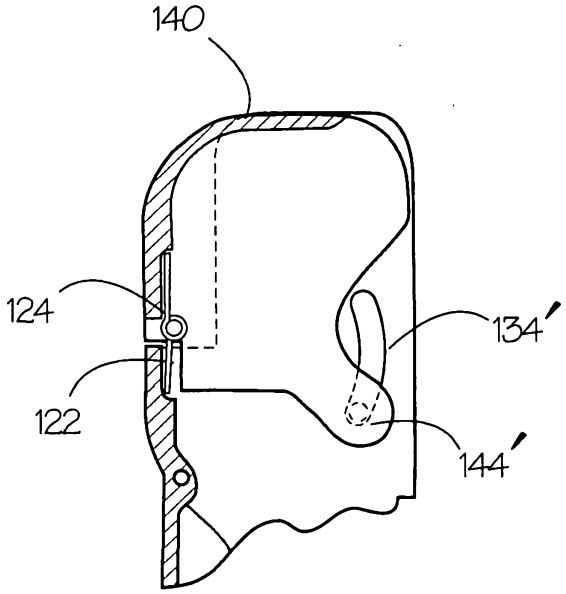


Fig. 8A

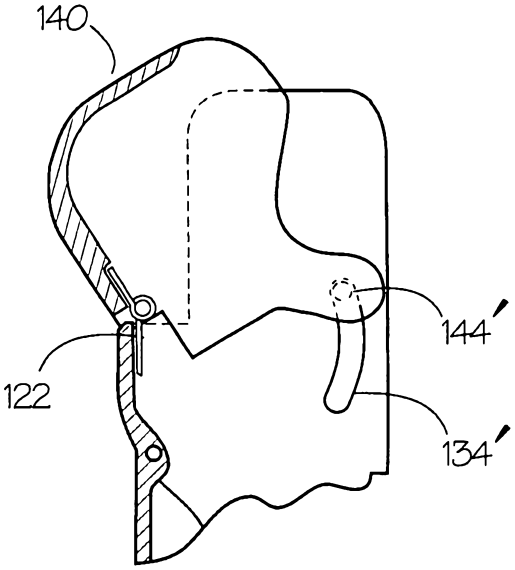


Fig. 8B

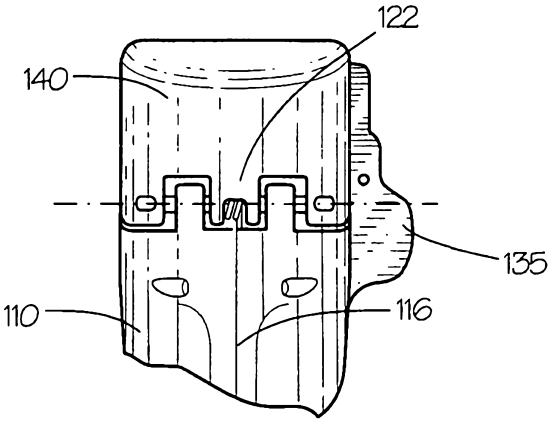


Fig. 9

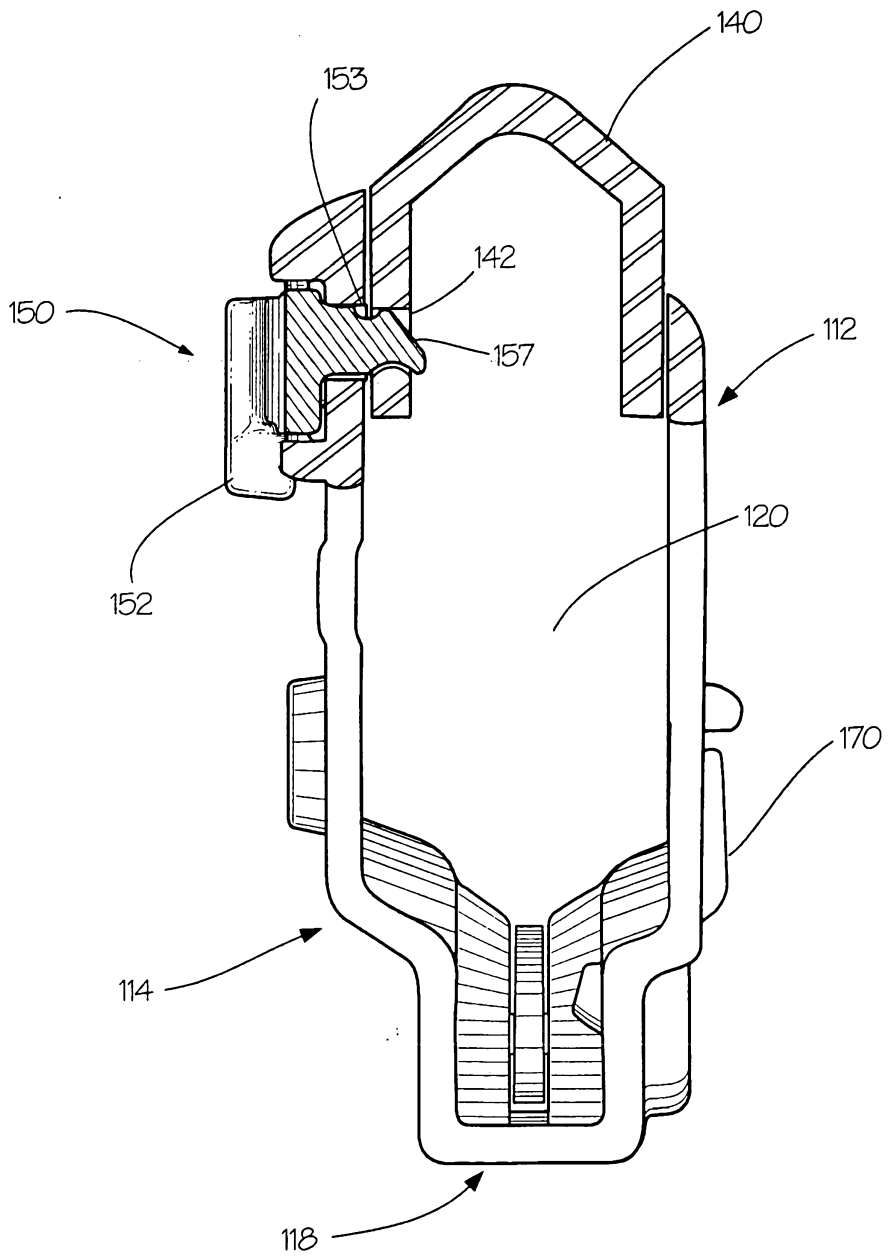


*Fig. 10A*

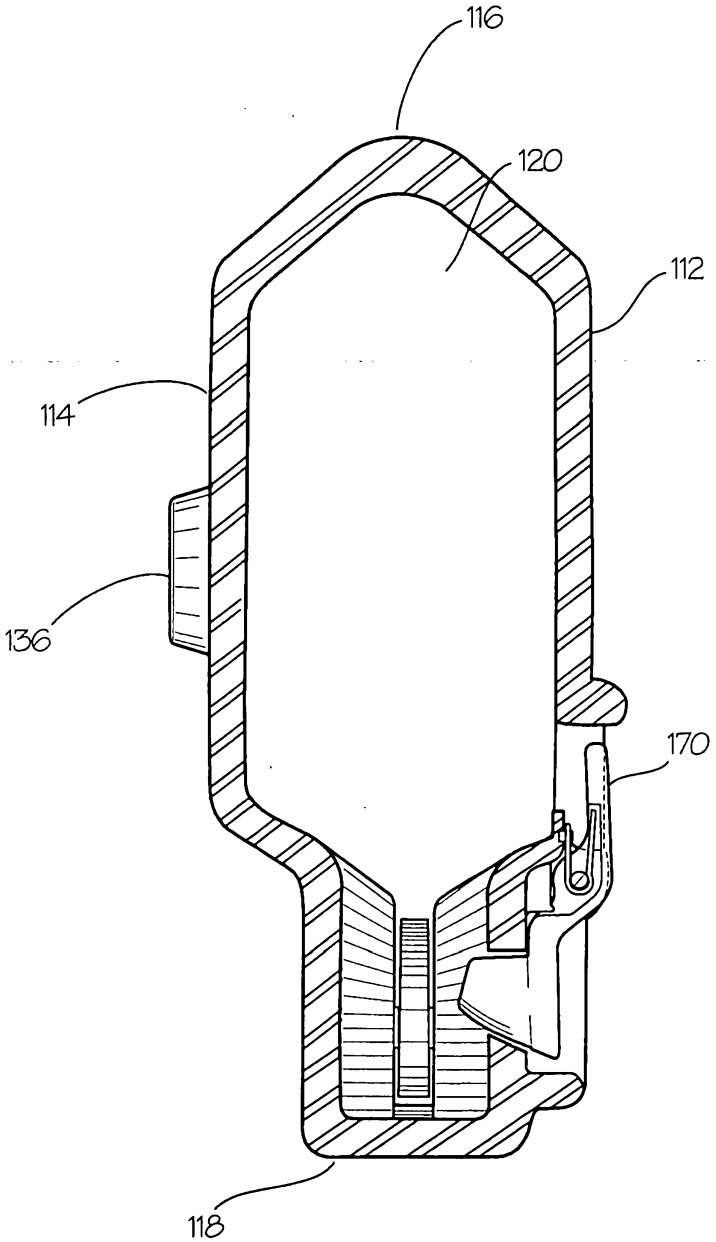


*Fig. 10B*

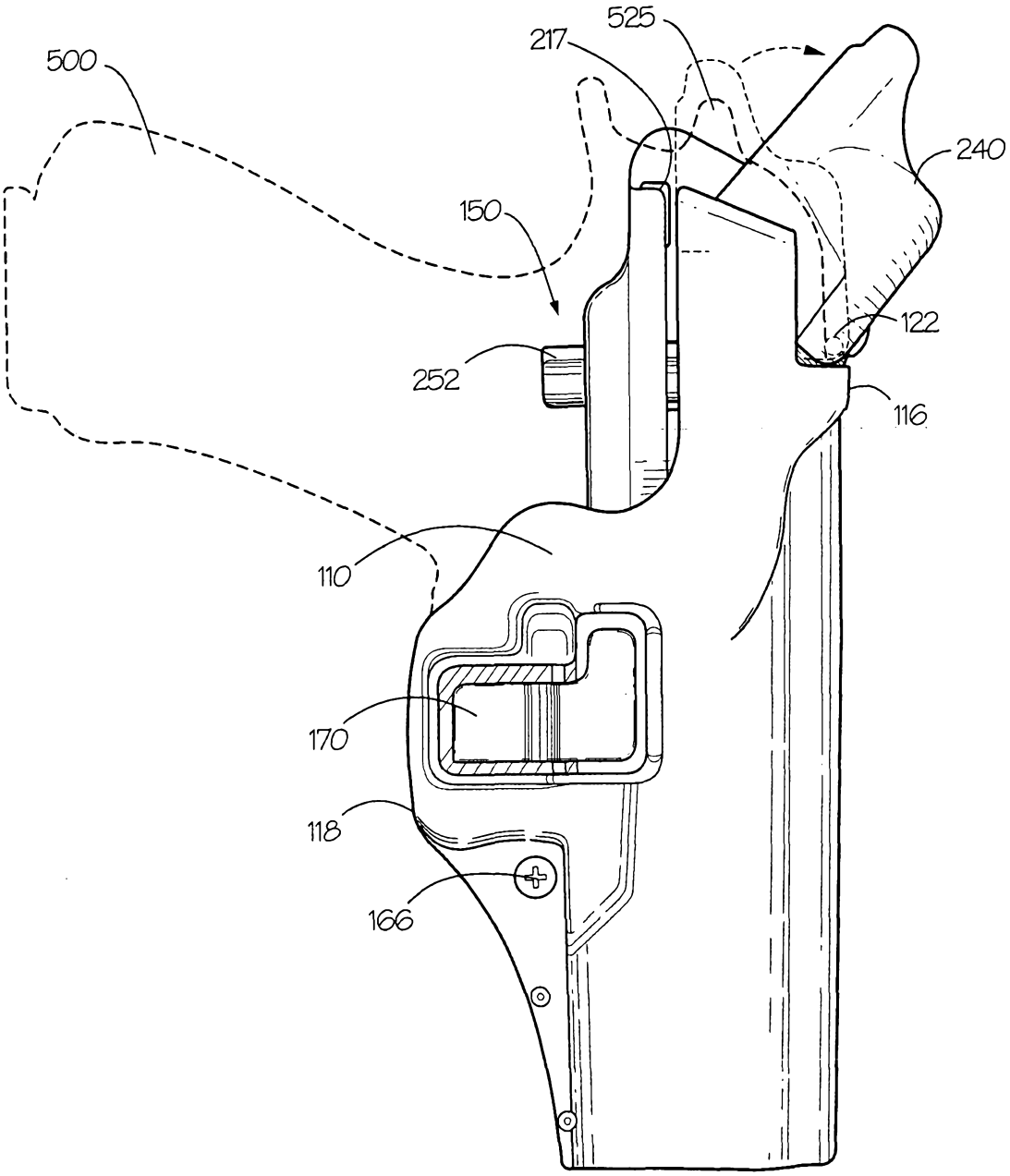


*Fig. 11*

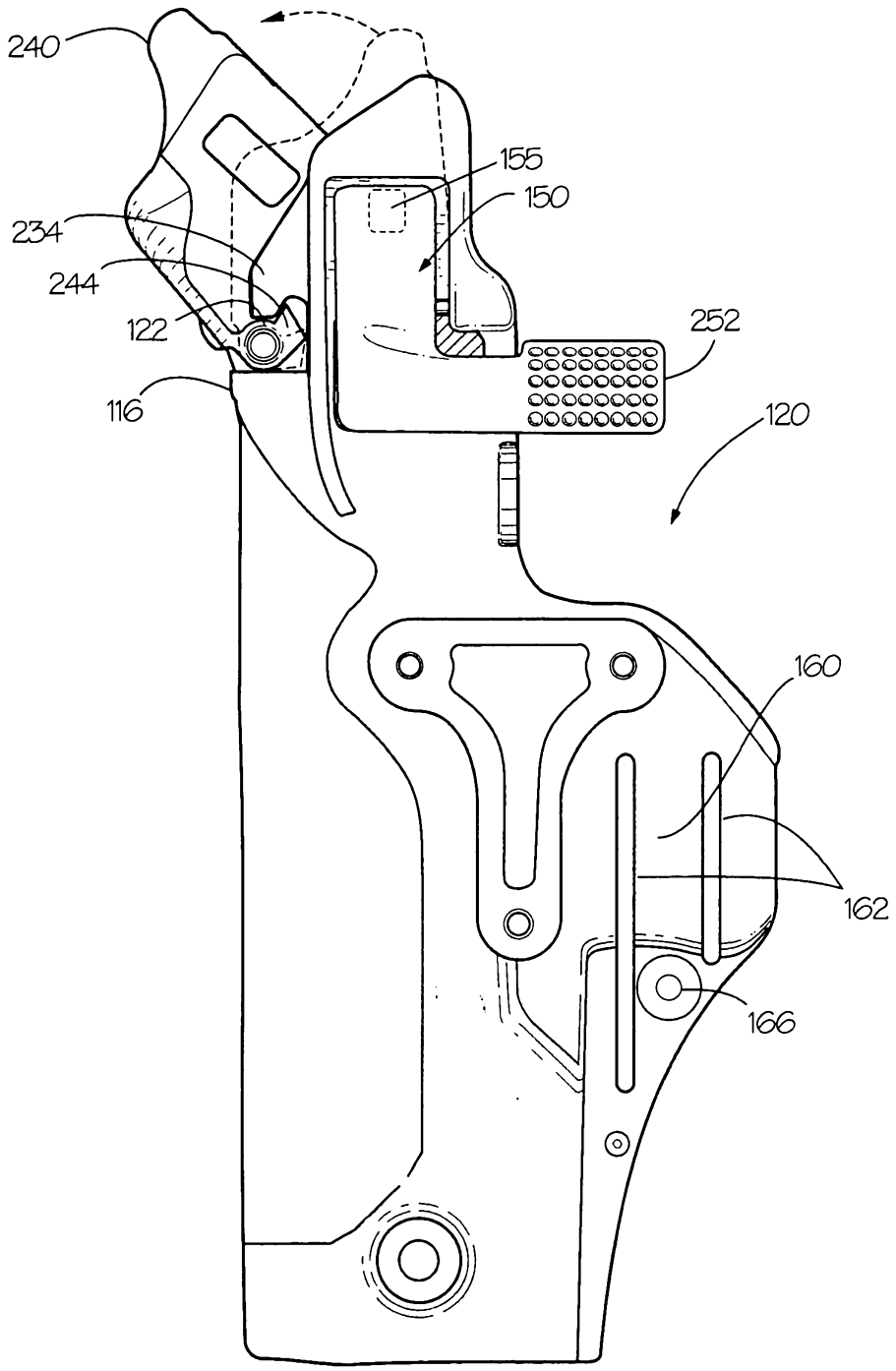


*Fig. 12*

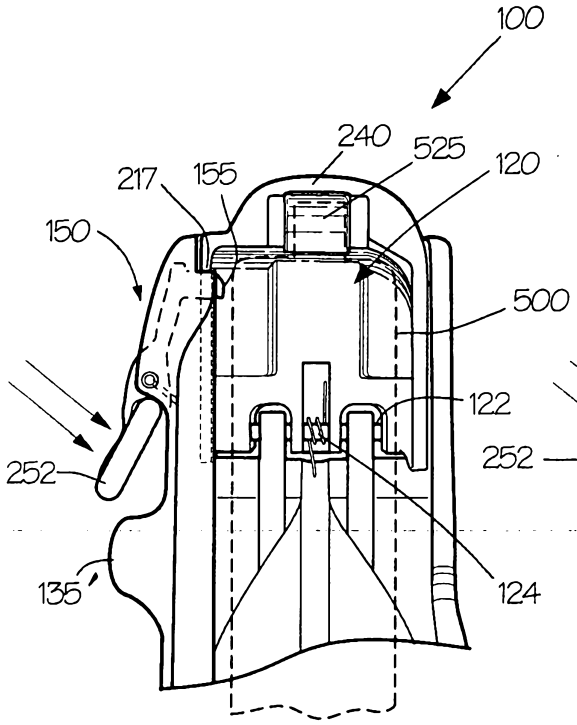


Fig. 13A

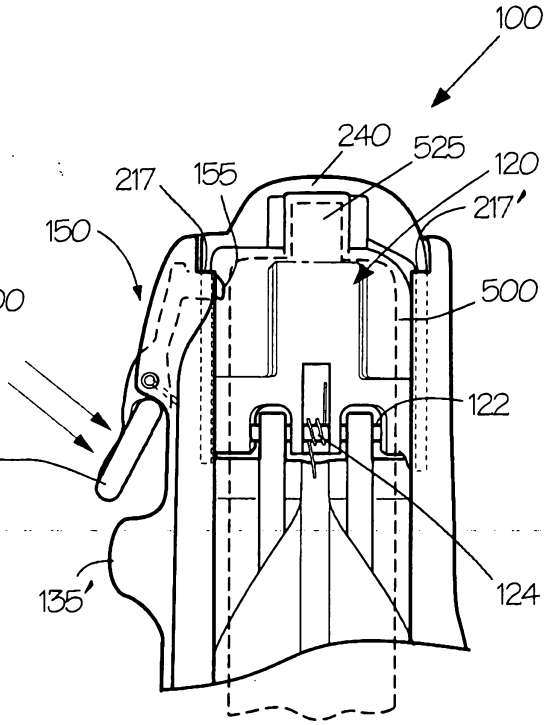


Fig. 13B

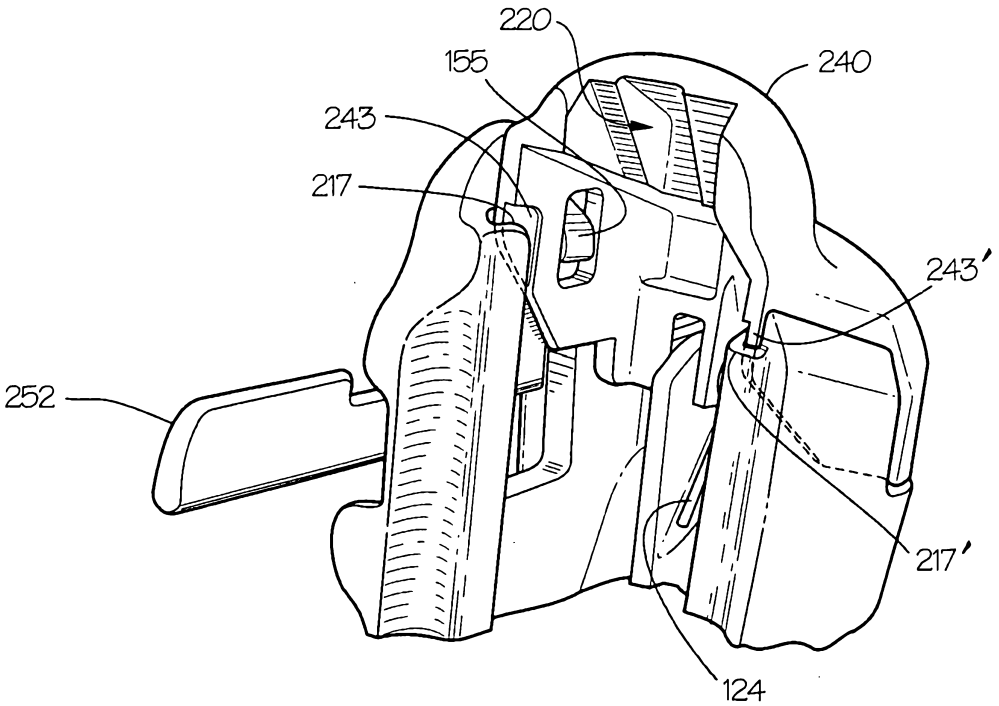


Fig. 14