(12) INTERNATIONAL APPLICATION PUBLISHED UNDER THE PATENT COOPERATION TREATY (PCT)

(19) World Intellectual Property Organization
International Bureau

(43) International Publication Date
31 August 2017 (31.08.2017)

WIPO | PCT

(10) International Publication Number
WO 2017/144447 A1

(51) International Patent Classification:
H02M 1/12 (2006.01) *H02M 1/44* (2007.01)

(21) International Application Number:
PCT/EP2017/053902

(22) International Filing Date:
21 February 2017 (21.02.2017)

(25) Filing Language: English

(26) Publication Language: English

(30) Priority Data:
10 2016 103 447.9
26 February 2016 (26.02.2016) DE

(71) Applicant: **EPCOS AG** [DE/DE]; St.-Martin-Straße 53, 81669 München (DE).

(72) Inventor: **BECK, Fabian**; Vorstädtli 2, 4522 Rüttenen (CH).

(74) Agent: **EPPING HERMANN FISCHER PATENTANWALTSGESELLSCHAFT MBH**; Schloßschmidstr. 5, 80639 München (DE).

(81) Designated States *(unless otherwise indicated, for every kind of national protection available)*: AE, AG, AL, AM, AO, AT, AU, AZ, BA, BB, BG, BH, BN, BR, BW, BY, BZ, CA, CH, CL, CN, CO, CR, CU, CZ, DE, DJ, DK, DM, DO, DZ, EC, EE, EG, ES, FI, GB, GD, GE, GH, GM, GT, HN, HR, HU, ID, IL, IN, IR, IS, JP, KE, KG, KH, KN, KP, KR, KW, KZ, LA, LC, LK, LR, LS, LU, LY, MA, MD, ME, MG, MK, MN, MW, MX, MY, MZ, NA, NG, NI, NO, NZ, OM, PA, PE, PG, PH, PL, PT, QA, RO, RS, RU, RW, SA, SC, SD, SE, SG, SK, SL, SM, ST, SV, SY, TH, TJ, TM, TN, TR, TT, TZ, UA, UG, US, UZ, VC, VN, ZA, ZM, ZW.

(84) Designated States *(unless otherwise indicated, for every kind of regional protection available)*: ARIPO (BW, GH, GM, KE, LR, LS, MW, MZ, NA, RW, SD, SL, ST, SZ, TZ, UG, ZM, ZW), Eurasian (AM, AZ, BY, KG, KZ, RU, TJ, TM), European (AL, AT, BE, BG, CH, CY, CZ, DE, DK, EE, ES, FI, FR, GB, GR, HR, HU, IE, IS, IT, LT, LU, LV, MC, MK, MT, NL, NO, PL, PT, RO, RS, SE, SI, SK, SM, TR), OAPI (BF, BJ, CF, CG, CI, CM, GA, GN, GQ, GW, KM, ML, MR, NE, SN, TD, TG).

Published:

— *with international search report (Art. 21(3))*

(54) Title: EMC FILTER AND USE THEREOF

FIG 2

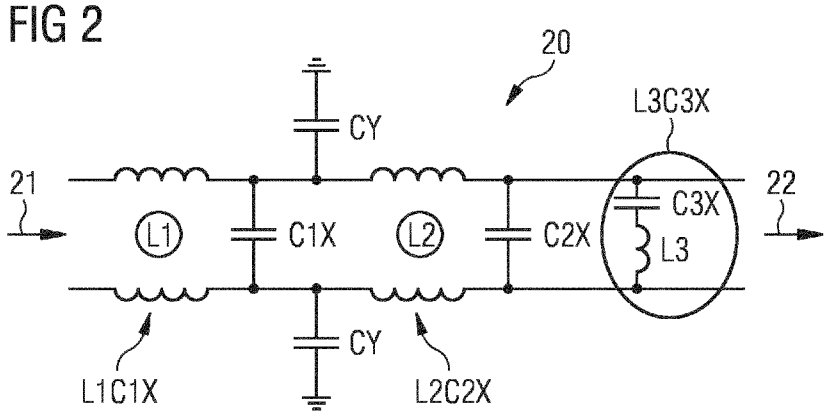

(57) Abstract: The description relates to a filter component (20) for use in wireless power transmission, having a resonant circuit (L3C3X) having an inductance (L3) and at least one capacitor (C3) that is connected in series with the inductance (L3), wherein the resonant circuit (L3C3X) is designed and arranged for attenuation of harmonics in the longwave band. Further, the use of a resonant circuit (L3C3X) is described.

WO 2017/144447 A1

EMC FILTER AND USE THEREOF

Description

Filter component and use of a filter component

The present invention relates to a filter component, particularly an EMC filter. The invention further relates to the use of a filter component.

In wireless power transmission (WPT), electric power is transmitted contactlessly from one object to another. The frequency of the wireless power transmission is typically between 81 kHz and 90 kHz, particularly is approximately 85 kHz, for applications in the automotive sector. Following wireless power transmission, the alternating signal needs to be rectified and subsequently forwarded to the high voltage (HV) bus. The signal on the HV bus then needs to be in the limited harmonic range from the 85 kHz rectification or conditioning and be as free of interference as possible.

Standard EMC filter components neglect sufficient filtering in the longwave (LW) band. Filters based on typical LC sections have excessively large dimensions, in particular, and require too many electrical components.

An object to be achieved is that of specifying a filter component that has improved properties.

This object is achieved by a filter component and the use of a filter component according to the independent claims.

According to one aspect, a filter component for use in wireless power transmission is specified. In particular, the filter component is used for the signal filtering in wireless power transmission in the automotive sector.
The filter component has a resonant circuit. The resonant circuit has an inductance. The resonant circuit has at least one capacitor. The capacitor is connected in series with the

inductance. The resonant circuit is a series resonant circuit. The resonant circuit is designed and arranged for attenuation of harmonics in the longwave band.

The inductance of the resonant circuit can have one element or multiple elements. The multiple elements may be connected in parallel or in series. The capacitor or the capacitor arrangement of the resonant circuit can have one element or multiple elements. The multiple elements may be connected in parallel or in series.

The filter component can further have one or more filter structures L, C, LC, CLC, LCLC, etc. The filter component can have arbitrary combinations of the filter structures. By way of example, the filter component can have one or more LC stages, for example a first LC filter stage and a second LC filter stage.

On the basis of the rectification of the signal supplied to the filter component, it is possible to see a multiple of a fundamental frequency of, by way of example, 85 kHz in the noise spectrum. A standard EMC filter component that allows an attenuation of approximately 30 to 40 dB to be achieved does not allow the second harmonic at 170 kHz, which is in the longwave radio band, to be sufficiently attenuated by a small number of electrical variables/components.

The filter component described specifies a compact and simple component that effectively rejects the second harmonic. In particular, the harmonic is shorted in a simple manner by the resonant circuit. A large number of capacitors, for example for a first and a second LC filter stage and a large inductance of the first and second LC filter stages can be avoided. This allows a low-noise signal to be made available using a simple component having small dimensions.

According to one exemplary embodiment, the filter component has a first LC filter stage. The filter component, particularly the first LC filter stage, has one or a multiplicity of first capacitors. The filter component can have a second LC filter stage. The filter component, particularly the second LC filter stage, has one or a multiplicity of second capacitors.

According to one exemplary embodiment, a fundamental frequency of the wireless power transmission is between 81 kHz and 90 kHz. Preferably, the fundamental frequency is 85 kHz. The resonant circuit is designed and arranged for attenuation of the second harmonic. In particular, the resonant circuit is designed and set up for attenuation of a frequency of 170 kHz. Preferably, the resonant frequency of the resonant circuit is 170 kHz. In this way, the second harmonic can be effectively attenuated in a simple manner.

According to one exemplary embodiment, the resonant circuit is connected downstream of the LC filter stages.

According to one exemplary embodiment, an equivalent resistance of the resonant circuit is less than or equal to the impedance of the at least one second capacitor. In particular, the resonant circuit has only a small number of capacitors. In this way, the impedance at 170 kHz can be reduced.

According to one exemplary embodiment, the resonant circuit has a quality factor Q. Preferably, Q is ≤ 100, particularly preferably, Q is ≤ 50. The low quality factor means that a bandwidth from 162 kHz to 180 kHz can be covered. The second harmonic can be effectively rejected.

According to one exemplary embodiment, the inductance is designed such that the resonant frequency is 170 kHz. This

allows the second harmonic to be effectively rejected at a fundamental frequency of approximately 85 kHz.

According to one exemplary embodiment, the value of the capacitors of the resonant circuit corresponds to the value of the second capacitors. This ensures that there is sufficient filter action beyond the second harmonic too.

According to a further aspect, the use of a resonant circuit at a frequency of 170 kHz with a quality factor Q is described, wherein $Q \leq 100$. Preferably, the resonant circuit has an inductance and at least one capacitor. The resonant circuit can have a plurality of capacitors. The at least one capacitor is connected in series with the inductance. Preferably, the resonant circuit corresponds to the resonant circuit described above. All properties that have been described in connection with the resonant circuit also apply to the use of the resonant circuit, and vice versa.

Preferably, the resonant circuit is used in wireless power transmission. In particular, the resonant circuit is used for the signal filtering in wireless power transmission in the automotive sector. Preferably, the resonant circuit is used in an EMC filter component, particularly the filter component described above. In particular, the resonant circuit is used for filtering the 2nd harmonic at a fundamental frequency of 85 kHz.

The drawings described below are not intended to be understood as being to scale. Rather, individual dimensions may be depicted in enlarged, reduced or even distorted form for the purpose of better representation.

Elements that are identical to one another or that perform an identical function are denoted by the same reference symbols.

In the drawings:

Figure 1 shows a circuit diagram of a filter component for filtering an interference voltage based on the prior art,

Figure 2 shows a circuit diagram of a filter component for filtering an interference voltage,

Figure 3 shows a graph of a voltage signal that has been filtered using a filter component based on the prior art,

Figure 4 shows a graph of a voltage signal that has been filtered using a filter component according to the invention.

Figure 1 shows a circuit diagram for a filter component 10 based on the prior art. The filter component 10 is an EMC filter.

The filter component 10 has a first LC filter stage L1C1X. The first LC filter stage L1C1X has a first inductance L1 and a first capacitor arrangement C1X. The capacitor arrangement C1X has at least one capacitor C1, but preferably a multiplicity X of capacitors C1.

The filter component 10 further has a second LC filter stage L2C2X. The second LC filter stage L2C2X is connected in series with the first LC filter stage L1C1X. The second LC filter stage L2C2X has a second inductance L2 and a second capacitor arrangement C2X. The capacitor arrangement C2X has at least one capacitor C2, but preferably a multiplicity X of capacitors C2.

Instead of the first and second LC filter stages, the filter component 20 can alternatively have a filter structure or an arbitrary number of filter structures L, C, LC, CLC, LCLC

(not depicted explicitly). The filter structures may be combined arbitrarily, in particular.

Further, the filter component 10 also has capacitors CY that also help to sufficiently reject interference with respect to the ground together with the first inductance L1 and the second inductance L2.

In the arrangement shown in Figure 1, the rectified signal reaches the filter 10 before it is forwarded to the HV bus. On the basis of the rectification, it is possible to see a multiple of the fundamental frequency of 85 kHz in the noise spectrum. The filter component 10 based on the prior art that is shown merely allows an attenuation of approximately 20 dB to be obtained, which is not sufficient to effectively reject the second harmonic ($2 \cdot 85$ kHz = 170 kHz).

Figure 2 shows a circuit diagram for a filter component 20 according to the invention. The filter component 20 is an EMC filter.

The text below demonstrates only the differences in comparison with the filter component 10 described above. In particular, the filter component 20 has a resonant circuit L3C3X besides the first LC filter stage L1C1X and the second LC filter stage L2C2X.
The resonant circuit L3C3X is connected in parallel with the first LC filter stage L1C1X and the second LC filter stage L2C2X. The resonant circuit L3C3X has an inductance L3. The resonant circuit L3C3X has a capacitor arrangement C3X. The capacitor arrangement C3X has at least one capacitor C3. It goes without saying that the capacitor arrangement C3X can also have a multiplicity X of capacitors C3, for example two, three, five or ten capacitors, however. The inductance L3 and the capacitor arrangement C3X are connected in series. The resonant circuit L3C3X is a series resonant circuit. The resonant circuit has a resonant frequency of 170 kHz.

To set the resonant frequency of 170 kHz, the number and properties of the capacitor arrangements C2X and C3X provided in the filter component 20 are preferably chosen such that C2X = C3X. Further, L3 is chosen such that the resonant frequency is 170 kHz.

The resonant circuit L3C3X has a quality factor Q. The quality factor Q is a measure of the attenuation that is achieved by the resonant circuit L3C3X. The higher the quality factor Q, the higher the attenuation, and vice versa. The resonant circuit L3C3X has a low quality factor. The quality factor Q needs to be low in order to cover a bandwidth from 162 kHz to 180 kHz. In particular, it holds that $Q \leq 100$.

The resonant circuit L3C3X is designed to avoid a large value of capacitors (e.g. 2.2 µF instead of 6.8 µF), which is necessary in order to reduce the impedance at 170 kHz. An equivalent resistance of the parallel resonant circuit L3C3X is less than or equal to the impedance of the X parallel second capacitors C2 of the capacitor arrangement C2X.

In the arrangement shown in Figure 2, the voltage signal is first of all processed by a rectifier 21. The rectified signal subsequently reaches the filter component 20 before it is forwarded to the HV bus 22. The filter component 20 means that good attenuation of the harmonic/the 2nd harmonic in the radio LW band can be attained. In particular, it can be seen from Figure 4 that the second harmonic (170 kHz) is attenuated by approximately 25 dB more by the filter component 20 according to the invention as by the filter component 10 based on the prior art (see Figure 3).

The description of the subjects specified here is not limited to the individual specific embodiments. Rather, the features of the individual embodiments - insofar as it makes technical sense - can be combined with one another arbitrarily.

List of reference symbols

10	Filter component
20	Filter component
21	Rectifier
22	HV bus
L1	First inductance
L2	Second inductance
L3	Inductance
C1	First capacitor
C2	Second capacitor
C3	Capacitor
CY	Capacitor
C1X	First capacitor arrangement
C2X	Second capacitor arrangement
C3X	Capacitor arrangement
L1C1X	First filter stage
L2C2X	Second filter stage
L3C3X	Resonant circuit

Patent claims

1. Filter component (20) for use in wireless power transmission, having a resonant circuit (L3C3X) having an inductance (L3) and at least one capacitor (C3) that is connected in series with the inductance (L3),
wherein the resonant circuit (L3C3X) is designed and arranged for attenuation of harmonics in the longwave band.

2. Filter component (20) according to Claim 1,
having at least one LC filter stage (L1C1X, L2C2X),
wherein the resonant circuit (L3C3X) is connected downstream of the LC filter stage (L1C1X, L2C2X).

3. Filter component (20) according to Claim 1 or 2,
wherein the filter component (20) has a first filter stage (L1C1X), wherein the first filter stage (L1C1X) has one or a multiplicity (X) of first capacitors (C1) and wherein the filter component (20) has a second filter stage (L2C2X), wherein the second filter stage (L2C2C) has one or a multiplicity (X) of second capacitors (C2).

4. Filter component (20) according to one of the preceding claims,
wherein the resonant circuit (L3C3X) has a multiplicity (X) of capacitors (C3).

5. Filter component (20) according to one of the preceding claims,
wherein a fundamental frequency of the wireless power transmission is between 81 kHz and 90 kHz, and wherein the resonant circuit (L3C3X) is designed and arranged for attenuation of the second harmonic.

6. Filter component (20) according to one of Claims 3 to 5, wherein an equivalent resistance of the resonant circuit (L3C3X) is less than or equal to the impedance of the at least one second capacitor (C2) connected in parallel.

7. Filter component (20) according to one of the preceding claims,
wherein the resonant circuit (L3C3X) has a quality factor (Q), and wherein $Q \leq 100$.

8. Filter component (20) according to one of the preceding claims,
wherein the inductance (L3) is designed such that the resonant frequency is 170 kHz.

9. Filter component (20) according to one of Claims 3 to 8, wherein the value of the capacitors (C3) of the resonant circuit (L3C3X) is equal to the value of the at least one second capacitor (C2).

10. Use of a resonant circuit (L3C3X) at a frequency of 170 kHz with a quality factor (Q), wherein $Q \leq 100$.

11. Use according to Claim 10, wherein the resonant circuit (L3C3X) has an inductance (L3) and at least one capacitor (C3), wherein the at least one capacitor (C3) is connected in series with the inductance (L3).

12. Use according to Claim 11,
wherein the resonant circuit (L3C3X) has a multiplicity (X) of capacitors (C3), and wherein the capacitors (C3) are connected in series with the inductance (L3).

FIG 1

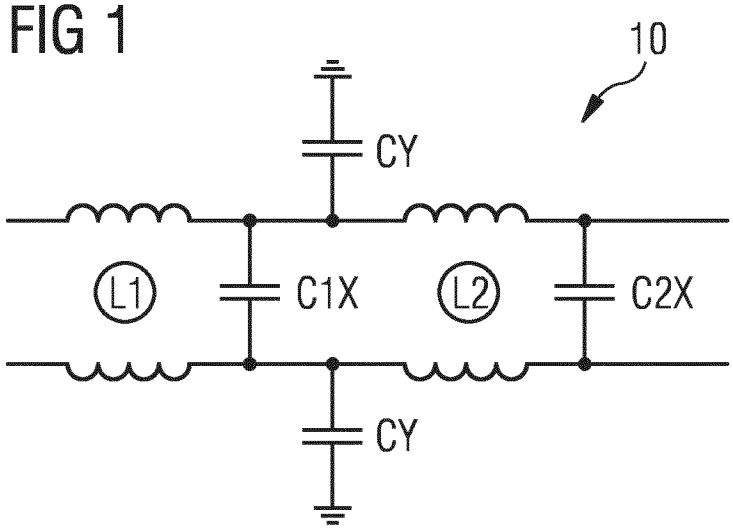
10
CY
L1
C1X
L2
C2X
CY

FIG 2

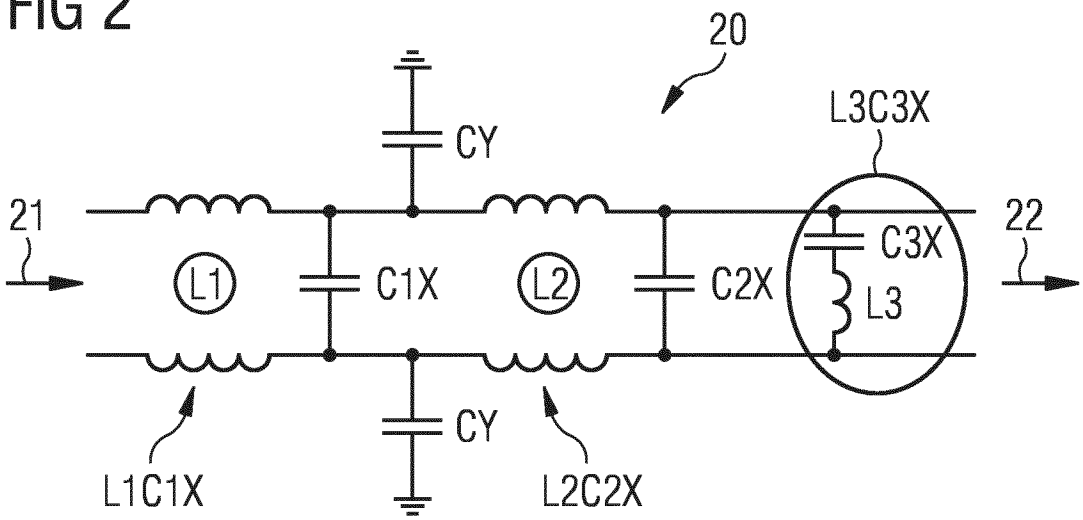
20
L3C3X
CY
21
22
L1
C1X
L2
C2X
C3X
L3
CY
L1C1X
L2C2X

FIG 3

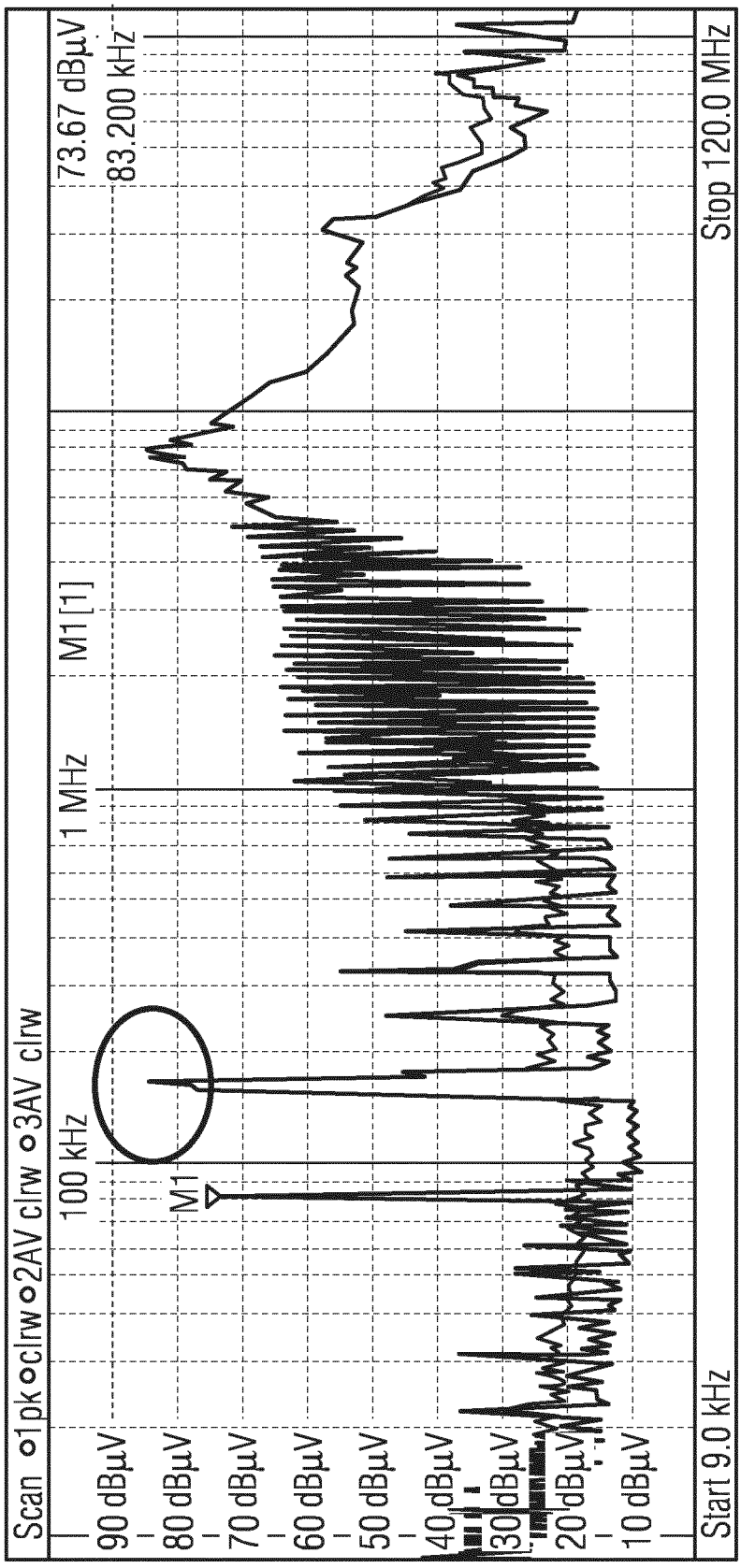
Scan 1pk clrw 2AV clrw 3AV clrw
73.67 dBµV
83.200 kHz
M1 [1]
1 MHz
100 kHz
M1
90 dBµV
80 dBµV
70 dBµV
60 dBµV
50 dBµV
40 dBµV
30 dBµV
20 dBµV
10 dBµV
Start 9.0 kHz
Stop 120.0 MHz

FIG 4

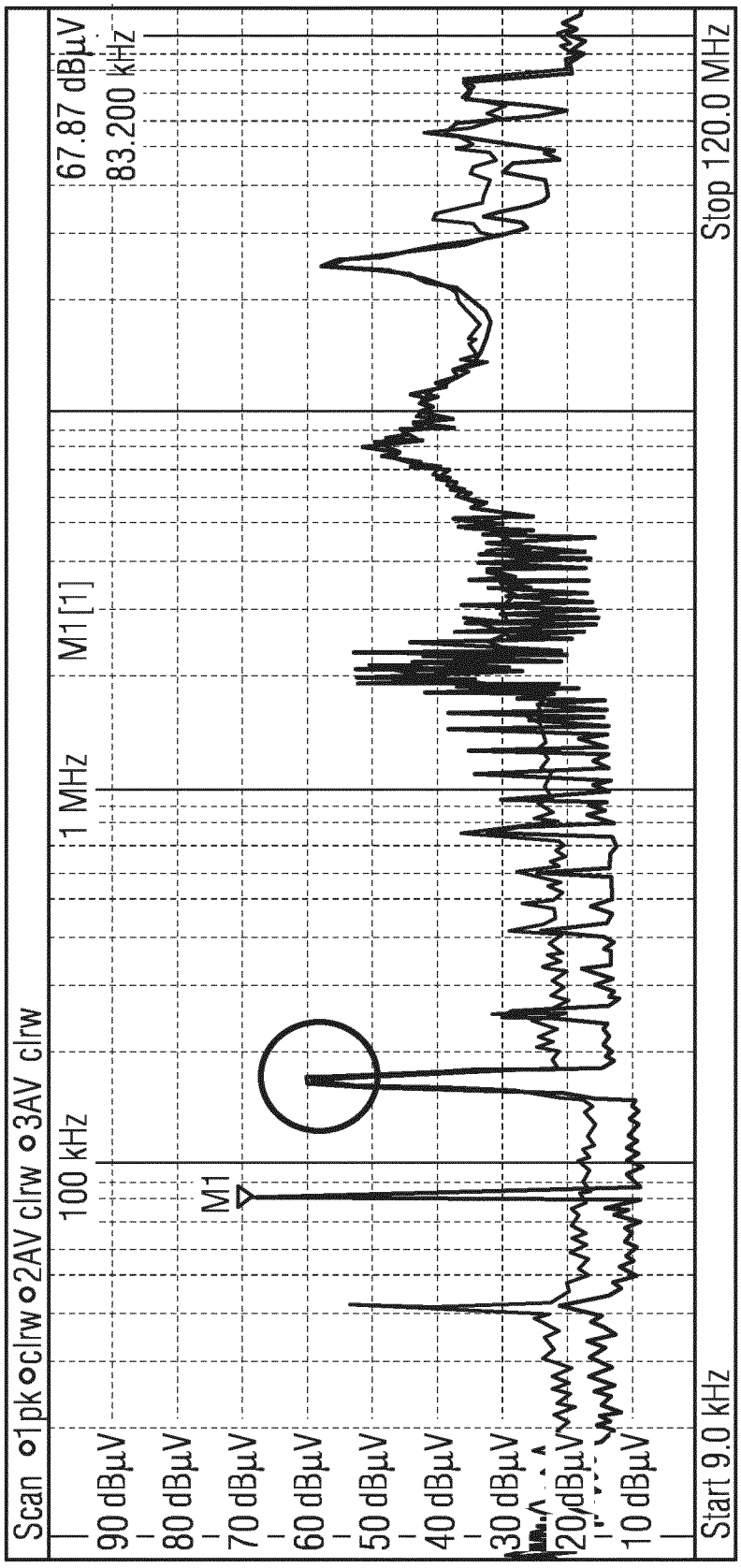
Scan 1pk clrw 2AV clrw 3AV clrw
100 kHz
1 MHz
M1[1]
67.87 dBµV
83.200 kHz
M1
90 dBµV
80 dBµV
70 dBµV
60 dBµV
50 dBµV
40 dBµV
30 dBµV
20 dBµV
10 dBµV
Start 9.0 kHz
Stop 120.0 MHz

INTERNATIONAL SEARCH REPORT

International application No
PCT/EP2017/053902

A. CLASSIFICATION OF SUBJECT MATTER
INV. H02M1/12 H02M1/44
ADD.

According to International Patent Classification (IPC) or to both national classification and IPC

B. FIELDS SEARCHED

Minimum documentation searched (classification system followed by classification symbols)
H02M H02J B60L H03H

Documentation searched other than minimum documentation to the extent that such documents are included in the fields searched

Electronic data base consulted during the international search (name of data base and, where practicable, search terms used)

EPO-Internal, WPI Data, COMPENDEX, INSPEC

C. DOCUMENTS CONSIDERED TO BE RELEVANT

Category*	Citation of document, with indication, where appropriate, of the relevant passages	Relevant to claim No.
X	JP 2007 067941 A (TDK CORP) 15 March 2007 (2007-03-15) paragraphs [0036] - [0071], [0109]; figures 1,2,10,11	1,5-8, 10,11
X	JP 2001 024462 A (NTT DATA CORP) 26 January 2001 (2001-01-26) paragraphs [0023] - [0062]; figures 2-4	1-5,7-12
X	US 5 619 080 A (PENNINGTON DONALD G [US] ET AL) 8 April 1997 (1997-04-08) abstract; figures 1,2 column 2, line 25 - column 4, line 31	1-5,7-12

-/--

[X] Further documents are listed in the continuation of Box C.

[X] See patent family annex.

* Special categories of cited documents :

"A" document defining the general state of the art which is not considered to be of particular relevance

"E" earlier application or patent but published on or after the international filing date

"L" document which may throw doubts on priority claim(s) or which is cited to establish the publication date of another citation or other special reason (as specified)

"O" document referring to an oral disclosure, use, exhibition or other means

"P" document published prior to the international filing date but later than the priority date claimed

"T" later document published after the international filing date or priority date and not in conflict with the application but cited to understand the principle or theory underlying the invention

"X" document of particular relevance; the claimed invention cannot be considered novel or cannot be considered to involve an inventive step when the document is taken alone

"Y" document of particular relevance; the claimed invention cannot be considered to involve an inventive step when the document is combined with one or more other such documents, such combination being obvious to a person skilled in the art

"&" document member of the same patent family

Date of the actual completion of the international search	Date of mailing of the international search report
3 May 2017	11/05/2017

Name and mailing address of the ISA/	Authorized officer
European Patent Office, P.B. 5818 Patentlaan 2 NL - 2280 HV Rijswijk Tel. (+31-70) 340-2040, Fax: (+31-70) 340-3016	Braccini, Roberto

1

Form PCT/ISA/210 (second sheet) (April 2005)

INTERNATIONAL SEARCH REPORT

International application No
PCT/EP2017/053902

C(Continuation). DOCUMENTS CONSIDERED TO BE RELEVANT

Category*	Citation of document, with indication, where appropriate, of the relevant passages	Relevant to claim No.
X	WO 02/07293 A1 (EPCOS AG [DE]; PAULWITZ CHRISTIAN [DE]; KARASEK MANFRED [DE]) 24 January 2002 (2002-01-24) page 1, line 9 - page 6, line 22; figures 1-4	1-5,7-12
X	JP 2008 245037 A (FUJI ELECTRIC HOLDINGS) 9 October 2008 (2008-10-09) paragraphs [0019] - [0026], [0034] - [0037]; figures 1,2,5,12,14	1-5,7-12

1

INTERNATIONAL SEARCH REPORT

Information on patent family members

International application No
PCT/EP2017/053902

Patent document cited in search report	Publication date	Patent family member(s)	Publication date
JP 2007067941 A	15-03-2007	NONE	
JP 2001024462 A	26-01-2001	JP 3164567 B2	08-05-2001
		JP 2001024462 A	26-01-2001
US 5619080 A	08-04-1997	NONE	
WO 0207293 A1	24-01-2002	AT 339796 T	15-10-2006
		DE 10034054 A1	04-04-2002
		DK 1299937 T3	15-01-2007
		EP 1299937 A1	09-04-2003
		ES 2271053 T3	16-04-2007
		JP 4681207 B2	11-05-2011
		JP 2004504798 A	12-02-2004
		US 2003184410 A1	02-10-2003
		WO 0207293 A1	24-01-2002
JP 2008245037 A	09-10-2008	NONE	