Nov. 26, 1940. H. B. KLINE ET AL 2,222,817

APPARATUS FOR DRYING THREAD OR THE LIKE

Filed March 9, 1937 4 Sheets-Sheet 1

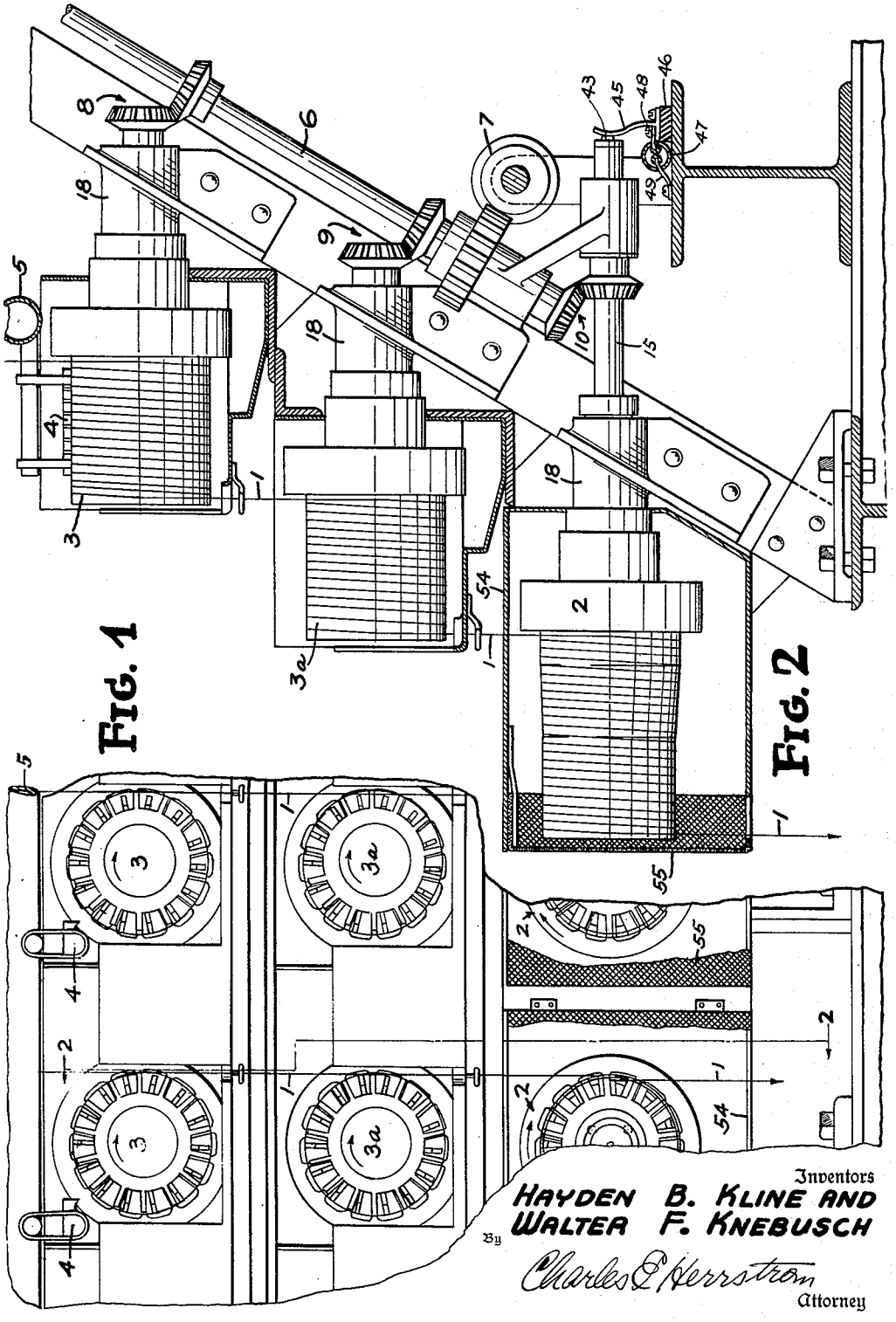

FIG. 1

FIG. 2

Inventors
HAYDEN B. KLINE AND
WALTER F. KNEBUSCH
By Charles P. Herrstrom
Attorney

Nov. 26, 1940. H. B. KLINE ET AL 2,222,817

APPARATUS FOR DRYING THREAD OR THE LIKE

Filed March 9, 1937 4 Sheets-Sheet 2

FIG. 3

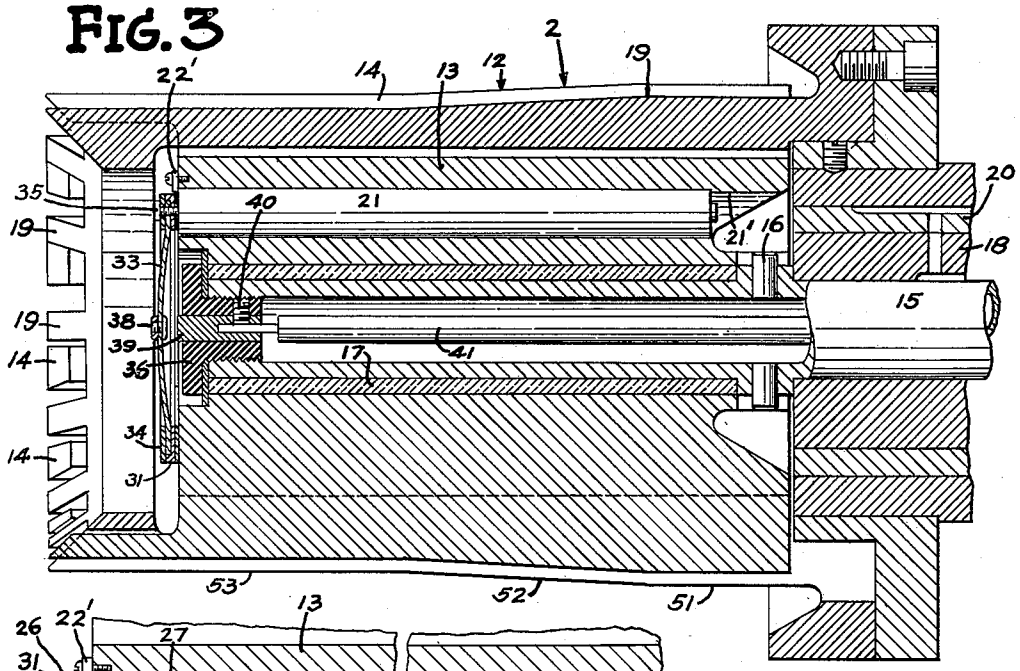

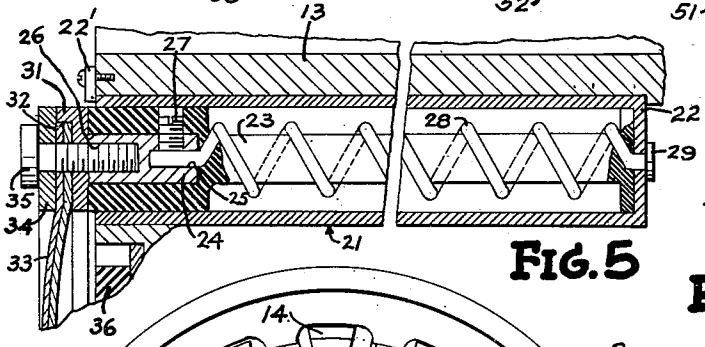

FIG. 5

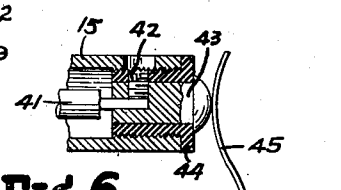

FIG. 6

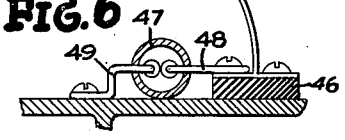

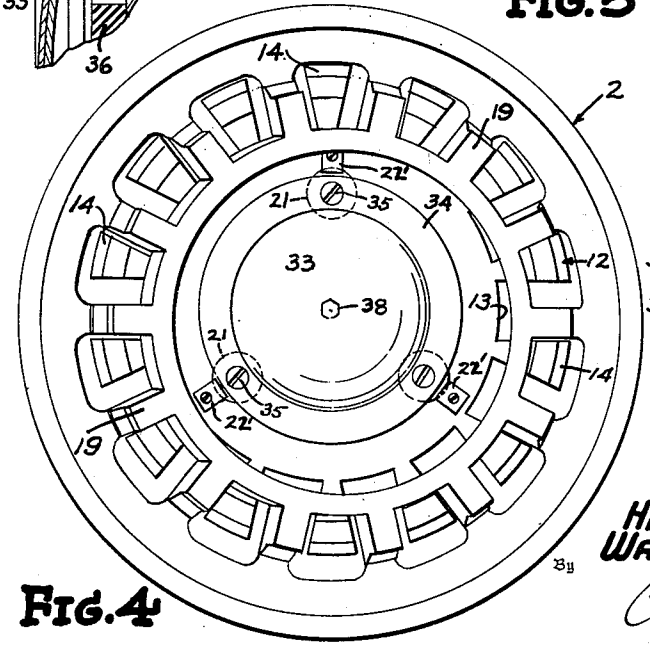

FIG. 4

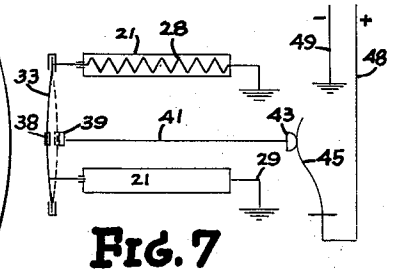

FIG. 7

Inventor

HAYDEN B. KLINE AND
WALTER F. KNEBUSCH

By Charles E. Herrstrom

Attorney

Nov. 26, 1940. H. B. KLINE ET AL 2,222,817

APPARATUS FOR DRYING THREAD OR THE LIKE

Filed March 9, 1937 4 Sheets-Sheet 3

FIG. 8

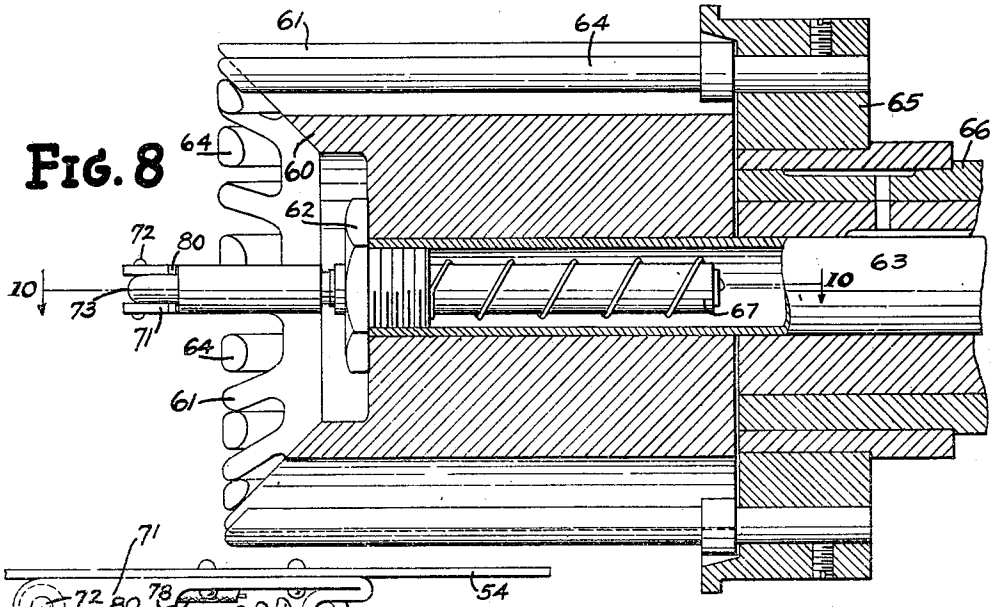

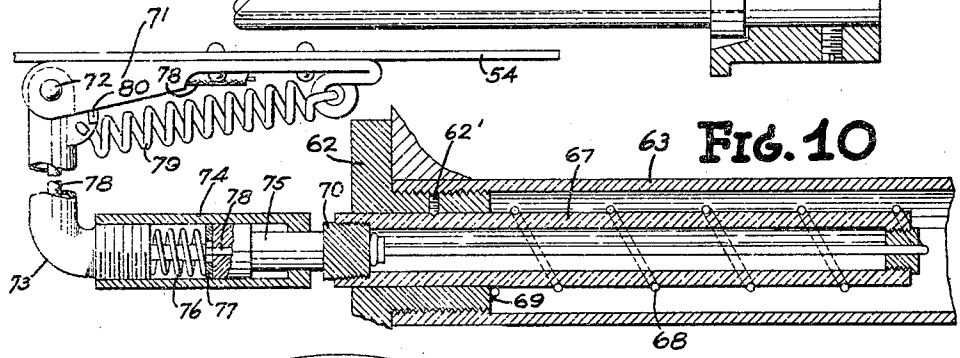

FIG. 10

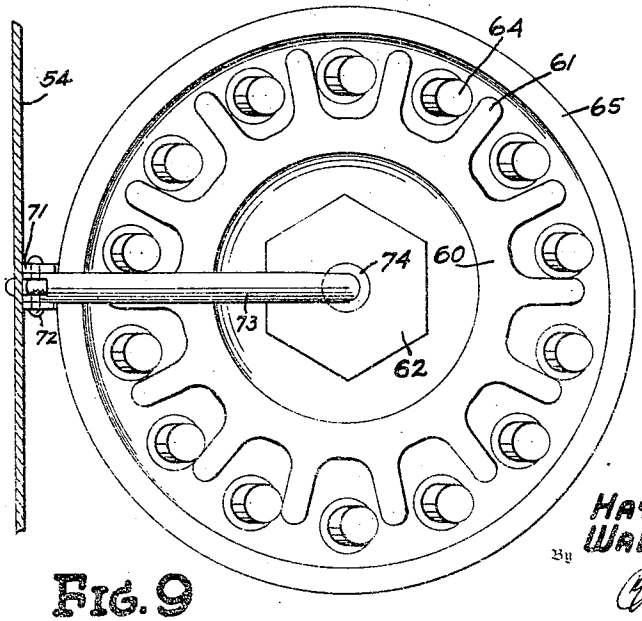

FIG. 9

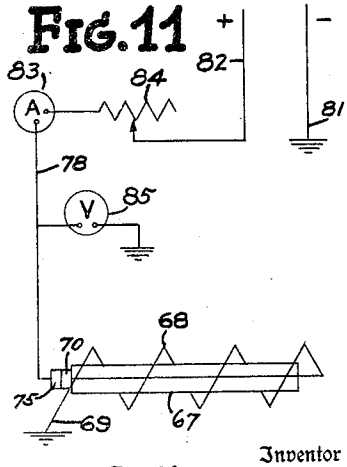

FIG. 11

Inventor

HAYDEN B. KLINE AND
WALTER F. KNEBUSCH

By Charles E. Herrstrom

Attorney

Nov. 26, 1940. H. B. KLINE ET AL 2,222,817

APPARATUS FOR DRYING THREAD OR THE LIKE

Filed March 9, 1937 4 Sheets-Sheet 4

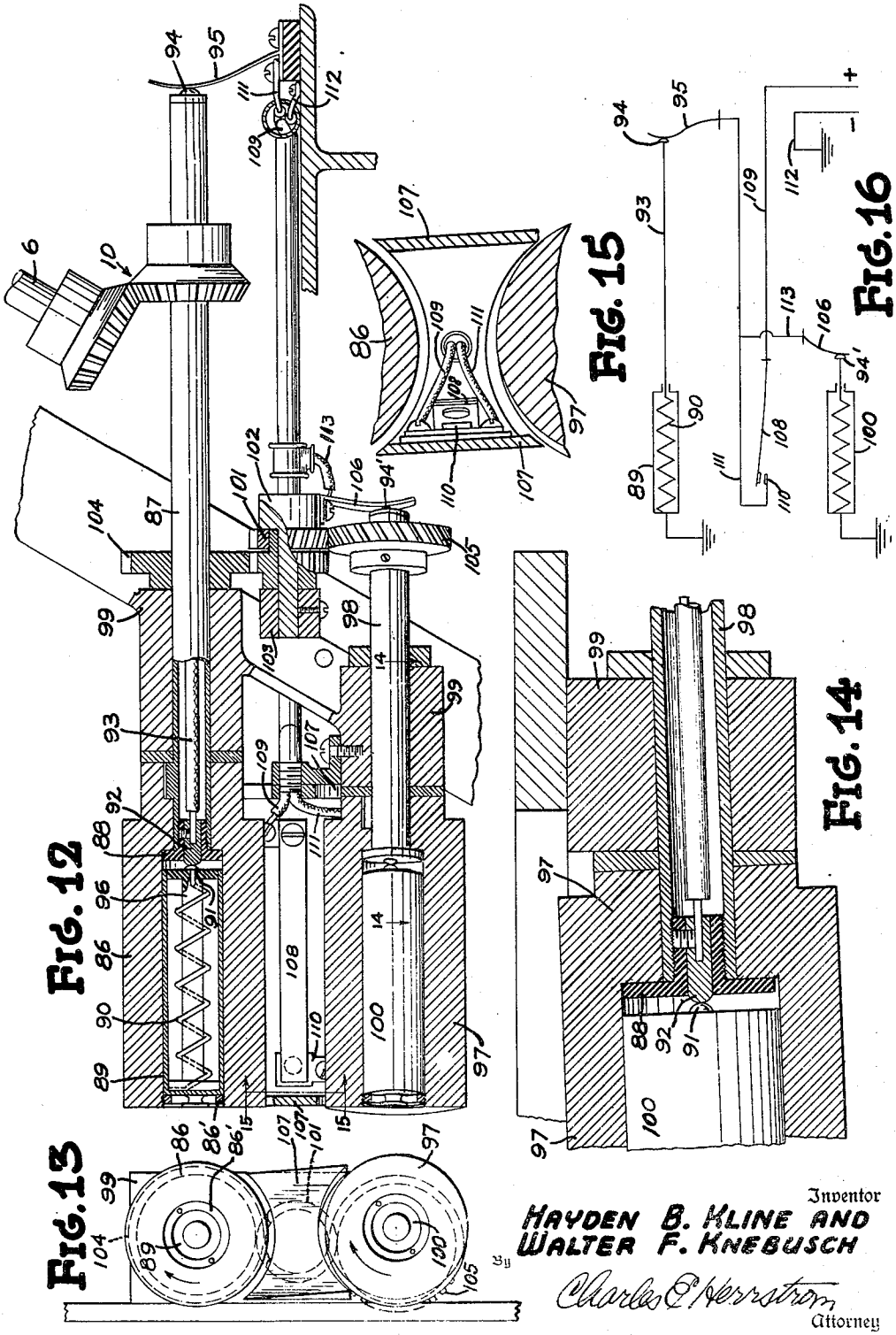

Fig. 12

Fig. 13

Fig. 14

Fig. 15

Fig. 16

Inventor
HAYDEN B. KLINE AND
WALTER F. KNEBUSCH
By
Charles P. Kerratrom
Attorney

Patented Nov. 26, 1940 2,222,817

UNITED STATES PATENT OFFICE

2,222,817

APPARATUS FOR DRYING THREAD OR THE LIKE

Hayden B. Kline and Walter F. Knebusch, Cleveland, Ohio, assignors to Industrial Rayon Corporation, Cleveland, Ohio, a corporation of Delaware

Application March 9, 1937, Serial No. 129,847

8 Claims. (Cl. 34—29)

This invention relates to thread drying apparatus and, more particularly, to electrically heated thread-storage, thread-advancing devices, which devices may advantageously be employed in order to dry thread or the like. Although the invention is hereinafter described as applied to the production of viscose artificial silk thread, it may be employed to advantage in the manufacture of thread produced by other processes, such as the cuprammonium, cellulose nitrate, and cellulose acetate processes. Furthermore, the invention is not only applicable to the drying of viscose artificial silk thread, but may be used to dry other natural or synthetic thread-like materials such as bands, ribbons, tapes, and tubes, all of which are embraced by the term "thread" as herein employed.

In the drawings, Figures 1 and 2 are respectively a front elevation of a portion of a continuous processing apparatus employing reels of a preferred type embodying the present invention and a section on the line 2—2 of Figure 1 showing the reels more or less diagrammatically. Figure 3 is a vertical section through one of the reels of Figures 1 and 2, parts thereof being shown in elevation. Figure 4 is an elevation of the unsupported end of the reel shown in section in Figure 3. Figure 5 is a fragmentary section on an enlarged scale showing the construction of one of the heating elements. Figure 6 is a detail showing on an enlarged scale the contact means at the rear end of the reel shaft. Figure 7 is a wiring diagram of the electrical circuit employed in this embodiment of the invention.

Figure 8 is a vertical section through a somewhat different type of reel in which the invention is incorporated, parts being shown in elevation. Figure 9 is an elevation of the unsupported end of the reel of Figure 8. Figure 10 is a section on an enlarged scale on the line 10—10 of Figure 8 of a portion of the device of Figure 8. Figure 11 is a wiring diagram of the circuit employed in supplying electric current to the reel of Figures 8 to 10, inclusive.

Figure 12 is a section longitudinally through another type of thread-storage, thread-advancing device embodying the present invention, parts being shown in elevation. Figure 13 is an elevation of the unsupported end of the device of Figure 12. Figure 14 is a section on an enlarged scale of a portion of the upper thread-advancing member of Figure 12 illustrating the electrical connection to the heating cartridge. Figure 15 is a section on an enlarged scale on the line 15—15 of Figure 12. Figure 16 is a wiring diagram of the circuit employed in supplying electric current to the embodiment of the invention disclosed in Figures 12 to 14, inclusive.

In the apparatus of Figures 1 and 2, each thread 1 is illustrated as passing downward to reel 3 from a plurality of preceding thread-storage, thread-advancing reels upon each of which is performed some desired processing step. The thread is subjected upon reel 3 to a washing treatment by means of liquid showered upon the reel from a distributor 4 extending longitudinally of the reel 3 supplied with fluid from a delivery pipe 5. The thread passes from reel 3 to reel 3a, upon which excess washing liquid is allowed to drip from the thread. After leaving reel 3a, the thread passes to drying reel 2.

In said apparatus, the several reels which handle a single thread are disposed above each other to form a descending series and are arranged in offset relation so that the thread-receiving portion of one reel is below the thread-discharge portion of the reel thereabove. In a complete apparatus, a large number of vertical series of reels for handling the individual threads are disposed side by side; so that a common supply means, such as the distributor supply pipe 5, may be employed to serve all of the reels upon which the same processing step is performed. Each vertical series of reels may be driven from a common shaft 6 disposed to the rear of the several reels of the series, all of said shafts 6 being driven from a suitable power shaft 7. The reels are shown as driven at the desired relative speeds by means of gearing 8, 9 and 10.

The general construction and theory of operation of all reels shown in the apparatus of Figures 1 and 2 may be understood from a consideration of the construction and theory of operation of the reel of Figures 3 to 7, inclusive, constituting a preferred embodiment of the invention. Said reel includes a rotatable, concentrically mounted reel member 12 made up of a body portion 13 carrying a plurality of longitudinally disposed bar members 14. Reel member 12 is rotatably driven from hollow shaft 15 upon which it is mounted by means of pins 16 and is maintained upon shaft 15 by means of fastening bolt 36. Between the body portion 13 and shaft 15 is positioned a heat insulating bushing 17. Shaft 15 passes through a frame member 18 carried by the frame of the apparatus.

A second cooperating reel member comprising bar members 19 which are in interdigitating relation with the bar members 14 of the first-mentioned reel member, is supported upon a bushing

20 carried upon the exterior of frame member 18. The exterior of frame member 18 is eccentrically disposed with respect to the shaft 15, whereby the axis of the second reel member is offset from the axis of reel member 12. Bushing 20 has the axes of its interior and exterior surfaces at an angle to each other; so that the axes of reel members 12 and 19 are also disposed in inclined relationship. Due to the offsetting and relative inclination of the axes of the two reel members, the thread handled thereby will be automatically advanced in a plurality of generally helical turns axially of the reel.

In the case of the drying reel of Figures 3 and 4, the body portion 13 of reel member 12 is provided with a plurality of sockets 21' disposed symmetrically about the axis of reel member 12 for the purpose of receiving electrical heating elements. In the embodiment shown, three sockets are conveniently provided, resulting in an approximately equal distribution of heat throughout the reel. Secured within each of these sockets by retaining means 22' is a heater element 21. In the construction shown, the heater elements 21 take the form of cartridges, although they may take some other form, if desired.

Each of the heater elements 21 shown in Figures 3, 4 and 5 comprises a metallic outer shell and an inner longitudinally disposed insulating spool 23 the outer end of which is enlarged to close the shell opening. Within a bore in the enlarged end of spool 23 is a metallic element 24 having a wire receiving recess 25 at its inner end and a screw threaded hole 26 at its outer end. Secured in the recess 25 by a set screw 27 is a resistance wire 28 having its other end 29 secured as by welding to the closed end of the metal shell 22. Resistance wire 28 is wound spirally upon spool 23 and is thereby prevented from otherwise coming into contact with metal shell 22. Since the end 29 of resistance wire 28 is fastened to metallic shell 22, which in turn contacts with the wall of the socket 20, it will be apparent that the resistance wire 28 is thus grounded to the apparatus.

To connect the several heater elements together, a metal ring 31 encircles the outer enlarged ends of the spools 23. Within this ring is a recess 32 in which lies a bimetallic thermostatic disc 33. Bimetallic disc 33 is held in place and the ring 31 is held against the several spools 23 by means of an outer ring 34 and screws 35. By extending into the threaded holes 26, the screws 35 establish an electrical connection between the bimetallic element 33 and each of the resistance wires 28. Bimetallic element 33 receives electric current through a contact point 38 fastened to it at its center.

Disposed in position to be engaged by contact point 38 upon the flexing of bimetallic disc 33 is a metallic piece 39 carried within retaining bolt 36 which, in the illustrated embodiment of the invention, is shown as formed of suitable insulating material. Secured within the metallic piece 39 by set screw 40 is one end of a wire 41 which passes throughout the length of the shaft 15 to the supported end thereof. At this end, as shown in Figure 6, the wire 41 is fastened by means of set screw 42 to a metallic contact 43 carried by an insulating bushing 44 secured within the end of shaft 15. A flexible spring brush 45 carried upon an insulator block 46, secured to the frame of the apparatus, engages the exposed portion of the contact 43 to establish an electrical connection during the rotation of the reel. An electric conduit 47, receiving power from a suitable source of electricity, has one wire 48 thereof connected to the spring brush 45 and the other wire 49 grounded to the frame of the apparatus.

The electrical circuit is shown diagrammatically in Figure 7, from which it will be seen that current from wire 48 passes by means of spring brush 45 and contact 43 through wire 41 to the contact piece 39 disposed to be engaged by movable contact 38. From the contact 38 the current is passed through the bimetallic disc 33 to the several resistance windings 28 of the heater elements. All of the heater elements will be energized or de-energized at the same time, depending upon whether the contacts 38 and 39 are in engagement. By properly setting the contacts 38 and 39 relative to each other, the current will be broken when the reel has reached the desired high temperature. When the reel has cooled to a temperature which will not maintain adequate drying of the thread, the contacts 38 and 39 will be brought automatically into engagement and the electrical circuit established to bring the reels to the desired temperature.

The contour of the bar members lengthwise of the reel preferably conforms to the shrinkage characteristics of the thread, particularly if the reel is employed for drying thread. In the case of the reels shown in Figures 3 to 7, inclusive, thread passing over the cylindrical portion 51 of the reel has the excess surface moisture removed therefrom and during this time no substantial shrinkage of the thread occurs. In passing over the tapered portion 52 of the reel, the internal moisture of the thread is removed, as a result of which pronounced shrinkage of the thread takes place. In passing over the terminal cylindrical portion 53, the moisture content of the thread is reduced to the final desired percentage.

The reel should preferably be made of metal having a high coefficient of heat conductivity, such, for example, as aluminum. Bar members 14 are preferably flared in transverse cross-section, as shown in Figure 4, so that they are widest at their thread bearing surfaces. The reel is preferably enclosed in a housing 54 to reduce heat losses. It is desirable that there be an opening in the housing to allow ventilation of the interior of the housing and permit moisture-laden air to pass away therefrom, for which reason the door to the housing is shown as provided with a screen 55.

In the embodiment of the invention illustrated in Figures 8 to 11, inclusive, a somewhat different reel construction, as well as a different electrical heating element, is employed. The reel shown in Figure 8 includes a concentric reel member 60 carrying upon its exterior a plurality of longitudinally extending bar members 61. Reel member 60 is secured by means of the metallic bolt 62 to the hollow shaft 63, which corresponds to shaft 15 of Figure 3. The eccentric reel member comprises bar members 64 and their supporting annular member 65, which latter is rotatably mounted upon an eccentric bushing 66 corresponding to the bushing 20 of Figure 3. Bar members 61 and 64 alternate with each other.

The fastening bolt 62 is formed with an integral bore and secured within this bore by set screw 62' is a projecting tubular member 67 of electrical insulating material. Upon tubular member 67 is spirally wound an electric resistance element 68, one end of which is connected at 69 as by welding to the fastening bolt 62, thus grounding this end

of the resistance element 68. The other end of resistance element 68 is passed through the interior of the tube to a metallic contact 70 secured within the forward end of the tubular member 67, no other portion of the resistance element 68 other than the end connected at 69 being grounded. Since the tubular member 67 is formed of insulating material, both the electric element 68 and the electrical contact 70 carried thereby are insulated from the body of the apparatus.

Carried by the side wall of the housing 54 is a bracket 71 having hinged means for engaging metallic contact 70. This bracket comprises a portion fixed to the housing 54 in which is carried a fulcrum pin 72. Pivotally mounted upon pin 72 is an arm 73 which extends to a point laterally opposite the center of the reel and thence inward to the reel itself. Upon the free end of the arm 73 is secured a tubular element 74 preferably made of an electric insulating material. An electric brush 75, slidably positioned within tubular element 74, extends through the open end thereof to engage with the contact 70 at the unsupported end of the reel. Brush 75 is urged away from tubular element 74 by means of a compression spring 76 insulated from the brush by a washer 77. An electric wire 78 embedded in the brush 75 extends through the tubular arm 73 to the bracket 71 and to a suitable source of electric current.

To hold the arm 73 in proper relation to the reel, a spring 79 is provided. To limit the swing of the arm 73 under the influence of spring 79, the arm 73 may be provided with stop 80 which will strike against the fixed portion of the bracket. When in this position, the brush 75 will be forced inwardly of the tubular element 74 and yielding but positive contact will be maintained between the brush 75 and contact 70 under the influence of the relatively weak spring 76. If it is desired to manipulate the thread on the reel, as, for example, for the purpose of effecting thread transfer, the arm 73 may be swung around the pivot 72 into a position in which it is out of the way.

In Figure 11 is illustrated a preferred wiring arrangement for the apparatus disclosed in Figures 8 to 10, inclusive. One line wire leading from the source of current is grounded to the apparatus at 81. The wire 78 leading from brush 75 is connected to the other line wire 82 through an ammeter 83 and variable resistance 84. Current flows from line wire 82 through the variable resistance 84, through the ammeter 83, and over wire 78 to the brush 75. From brush 75 the current will be transmitted to contact 70 and then through the heating element 68 to the ground at 69 to complete the circuit. At any desired point along the wire 78 a volt meter 85 may be connected into this circuit as shown, to measure the potential drop across resistance wire 68.

Because of the presence of both the volt meter and ammeter, the wattage input into the resistance wiring 68 may be measured and by adjusting the rheostat 84 this wattage input may be controlled. This makes it possible so to regulate the heat delivered by the resistance winding 68 that the reel will be maintained at the temperature requisite to reduce the moisture content of the thread to the desired amount. Since the heat delivered by the heating element 68 is immediately responsive to an increase in the current flowing therethrough, a close control can be had over the wattage input to the heating element. With the information gained from experience in operating this type of arrangement, the necessary setting of the rheostat may be ascertained to maintain the drying reel at a suitable wet bulb temperature.

In the embodiment of the invention illustrated in Figures 12 to 16, inclusive, the thread-storage, thread-advancing device is made up of two thread-advancing members taking the form of hollow rotatable cylinders 86 and 97 which are spaced laterally from each other. The axes of these cylinders are in inclined relationship, so as to cause thread wound about them to advance axially of the cylinders. The shafts 87 and 98 are supported in offset and inclined relation by frame member 99 having separate bearing portions for the two shafts. It will be understood that the thread-storage, thread-advancing device comprising the rotatable cylinders 86 and 97 may be substituted for the reel 2 in Figure 2.

Rotatable cylinder 86 is held on shaft 87 by means of a hollow bolt 88 preferably made of some electric insulating material. Carried within the bore of the fastening bolt 88 is a metallic contact 92 which projects into the interior of rotatable cylinder 86. From contact 92 a wire 93 extends through the hollow shaft 87 to a contact 94 at the unsupported end of the shaft. Contact 94 may be engaged by a spring brush 95 corresponding to the spring brush 45 appearing in Figure 2.

Retained within the bore of rotatable cylinder 86 by screw ring 86' is a heater element 89 of cartridge form which contains an electric resistance wire 90 wound spirally about an insulating spool 96. One end of the resistance wire is secured, as by welding, to the shell of the heater element 89, no other portion of the resistance wire being in contact with the shell of the heater element. The other end is brought to the outside of the heater element to form a contact 91. When the heater element 89 is in its proper position within rotatable cylinder 86, contact 91 will establish an electrical connection between resistance wire 90 and conducting wire 93.

Rotatable cylinder 97 is mounted upon shaft 98 and carries an internal electric heating element 100 and in this respect corresponds in general construction to rotatable cylinder 86. Shaft 98, however, is rotated through idler gear 101 from shaft 87. Idler gear 101 is carried on a bushing 102 supported in a lug 103 of frame member 99. A spur gear 104 secured to drive shaft 87 meshes with one portion of idler 101 and a gear 105 having helical teeth meshes with another portion of idler 101. Due to the positive gear drive between shafts 87 and 98, rotatable cylinders 86 and 97 will have the same peripheral speed. It will be understood that, if desired, shaft 98 need not be positively driven, in which case rotatable cylinder 97 may be rotated by the pull of the threads looped about it and rotatable cylinder 86.

Electric heating element 100 may be connected to a contact button 94' at the end of shaft 98, a spring brush 106 carried upon an insulating block on the head of bushing 102 engaging with contact button 94'.

In this embodiment of the invention, the space between the rotatable cylinders 86 and 97 is enclosed by a wall 107. Wall 107 extends between the opposing surfaces of rotatable cylinders 86 and 97 and serves to prevent heated air from escaping from the space between these two cylinders. The presence of this enclosing wall not only serves to minimize the electrical energy required to heat the rotatable cylinders, but assists in maintaining the two cylinders at the same temperature. Inasmuch as wall 107 will be of

approximately the same temperature as the rotatable cylinders themselves, it may be utilized to carry a thermostatic element.

As shown in Figures 15 and 16, bimetallic strip 108 may be connected directly to one line wire 109 of the source of current. The other line wire 112 of the source of current is grounded on the frame of the apparatus. Fixed contact 110 is connected by wire 111 to the spring brush 95. Spring brush 106 is connected by wire 113 to the wire 111. This wiring arrangement will cause resistance elements 90 and 100 to be energized and de-energized simultaneously, since closing of the bimetallic switch 108 will cause current to flow to heater element 89 and heater element 100.

It will be understood that the details here shown are susceptible of wide change without in any way departing from the spirit of the invention. For example, structural details disclosed in connection with any one of the illustrated embodiments of the invention may be utilized in connection with one of the other illustrated embodiments. Thus it is possible, for example, to use the current regulating means and the wattage measuring means shown in Figure 11 in the wiring systems of Figures 7 and 16. Numerous other changes may also be made.

It is intended that the patent shall cover, by suitable expression in the appended claims, whatever features of patentable novelty reside in the invention.

What is claimed is:

1. Thread drying apparatus comprising a rotatable thread-storage, thread-advancing reel embodying two interdigitating reel members having relative movement during rotation of the reel each of which is made up of a plurality of spaced, longitudinally extending thread-bearing elements, one of said reel members including a body portion encompassed by the thread-bearing elements of the other reel member which body portion extends for a substantial distance lengthwise of and to which are attached the thread-bearing elements making up the reel member with which it is associated; means disposed in the body portion of said reel member for heating said reel member electrically; and means for supplying energy to said electrical heating means during rotation of the reel.

2. Thread drying apparatus comprising a rotatable thread-storage, thread-advancing reel embodying two interdigitating reel members having relative movement during rotation of the reel each of which is made up of a plurality of spaced, longitudinally extending thread-bearing elements, one of said reel members including a body portion encompassed by the thread-bearing elements of the other reel member which body portion extends for a substantial distance lengthwise of and to which are attached the thread-bearing elements making up the reel member with which it is associated; means disposed in the body portion of said reel member for heating said reel member electrically; means for supplying energy to said electrical heating means during rotation of the reel; and means responsive to temperature variations in said reel member for controlling the energy passing to said electrical heating means.

3. Thread drying apparatus comprising a rotatable thread-storage, thread-advancing reel embodying two interdigitating reel members having relative movement during rotation of the reel each of which is made up of a plurality of spaced, longitudinally extending thread-bearing elements, one of said reel members including a body portion encompassed by the thread-bearing elements of the other reel member which body portion extends for a substantial distance lengthwise of and to which are attached the thread-bearing elements making up the reel member with which it is associated; a plurality of electric heating elements disposed in the body portion of said reel member adjacent the periphery of said body portion; and means for supplying current to said electric heating elements during rotation of the reel.

4. Thread drying apparatus comprising a rotatable thread-storage, thread-advancing reel embodying two interdigitating reel members having relative movement during rotation of the reel each of which is made up of a plurality of spaced, longitudinally extending thread-bearing elements, one of said reel members including a massive body portion of high heat conductivity encompassed by the thread-bearing elements of the other reel member which body portion extends for a substantial distance lengthwise of and to which are attached the thread-bearing elements making up the reel member with which it is associated; means disposed in the body portion of said reel member for heating said reel member electrically; and means for supplying energy to said electrical heating means during rotation of the reel.

5. Thread drying apparatus comprising a rotatable thread-storage, thread-advancing reel embodying two interdigitating reel members having relative movement during rotation of the reel each of which is made up of a plurality of spaced, longitudinally extending thread-bearing elements, one of said reel members including a massive body portion of high heat conductivity which body portion extends for a substantial distance lengthwise of and to which are attached the thread-bearing elements, making up the reel member with which it is associated; a plurality of electric heating elements disposed in the body portion of said reel member adjacent the periphery of said body portion; and means for supplying current to said electric heating elements during rotation of the reel.

6. Thread drying apparatus comprising a rotatable thread-storage, thread-advancing reel of cantilever construction embodying two interdigitating reel members having relative movement during rotation of the reel each of which is made up of a plurality of spaced, longitudinally extending thread-bearing members, one of said reel members including a body portion encompassed by the thread-bearing members of the other reel member which body portion extends for a substantial distance lengthwise of and to which are attached the thread-bearing members making up the reel member with which it is associated; means for supporting said reel members from one end of the reel in such manner as to leave the other end of the structure defined by said reel members wholly unobstructed; means disposed in the body portion of said reel member for heating said reel member electrically; and means for supplying energy to said electrical heating means without obstructing the unsupported end of the reel.

7. Thread drying apparatus comprising a rotatable thread-storage, thread-advancing reel of cantilever construction embodying two interdigitating reel members having relative movement during rotation of the reel each of which is made up of a plurality of spaced, longitu-

dinally extending thread-bearing members, one of said reel members including a massive body portion of high heat conductivity encompassed by the thread-bearing members of the other reel member which body portion extends for a substantial distance lengthwise of and to which are attached the thread-bearing members making up the reel member with which it is associated; means for supporting said reel members from one end of the reel in such manner as to leave the other end of the structure defined by said reel members wholly unobstructed; means disposed in the body portion of said reel member for heating said reel member electrically; and means for supplying energy to said electrical heating means without obstructing the unsupported end of the reel.

8. Thread drying apparatus comprising a rotatable thread-storage, thread-advancing reel embodying two interdigitating reel members having relative movement during rotation of the reel each of which is made up of a plurality of spaced, longitudinally extending thread-bearing elements, one of said reel members including a massive body portion of high heat conductivity encompassed by the thread-bearing elements of the other reel member which body portion extends for a substantial distance lengthwise of and to which are attached the thread-bearing elements making up the reel member with which it is associated; means disposed in the body portion of said reel member for heating said reel member electrically; means for supplying energy to said electrical heating means during rotation of the reel; and means responsive to temperature variations in said reel member for controlling the energy passing to said electrical heating means.

HAYDEN B. KLINE.
WALTER F. KNEBUSCH.