Sept. 28, 1965 H. A. VAUGHAN 3,208,724

CARPENTER'S CLAW HAMMER WITH VIBRATION DAMPENING MEANS

Filed Dec. 16, 1963

FIG. 1

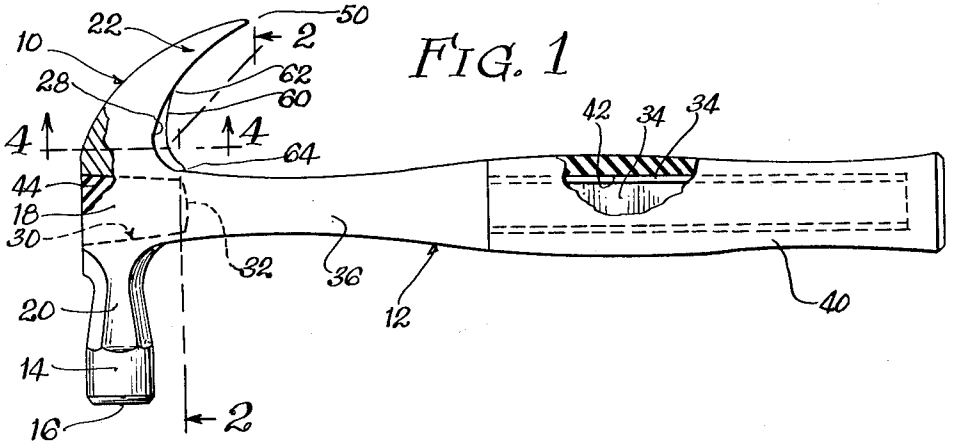

FIG. 2

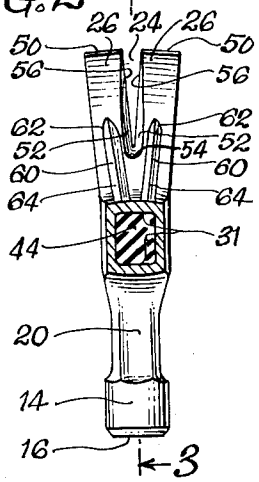

FIG. 3

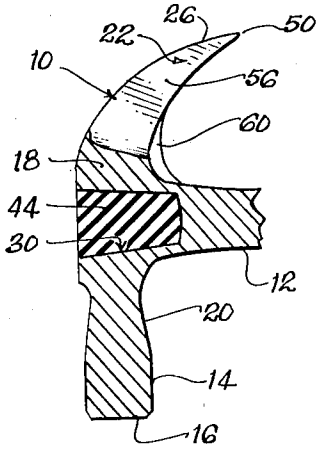

FIG. 4

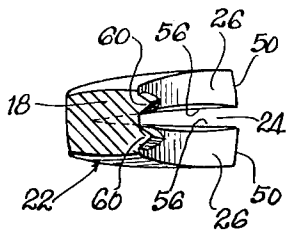

FIG. 5

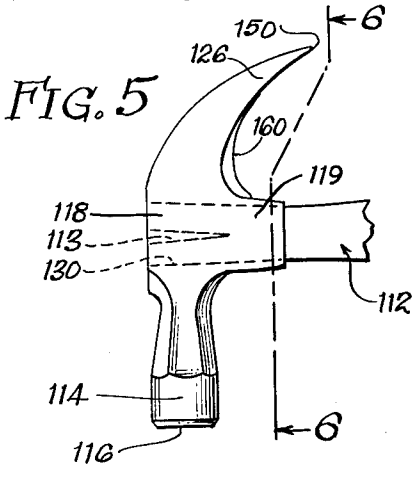

FIG. 6

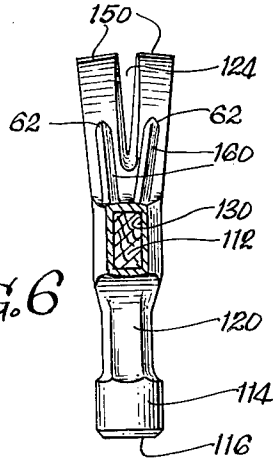

INVENTOR.
Howard A. Vaughan
BY Norman Gerlach
Att'y

United States Patent Office 3,208,724 Patented Sept. 28, 1965

3,208,724

CARPENTER'S CLAW HAMMER WITH VIBRATION DAMPENING MEANS

Howard A. Vaughan, Fontana, Wis., assignor to Vaughan & Bushnell Mfg. Co., Chicago, Ill., a corporation of Illinois

Filed Dec. 16, 1963, Ser. No. 330,757
2 Claims. (Cl. 254—26)

This application is a continuation-in-part of my copending patent application Serial No. 151,313, filed on November 9, 1961 and entitled "Carpenter's Claw Hammer With Vibration Dampening Means," and now abandoned.

The present invention relates to portable impact tools and has particular reference to a hammer construction. The invention is specifically concerned with a forged carpenter's claw hammer and finds application thereto regardless of whether such hammer be of the wooden handle type or the tubular steel handle type wherein the forged steel striking head is formed separately from the handle, or of the so-called "indestructible" type wherein the striking head is formed integrally with a steel shank, the latter constituting a part of the hammer handle. The invention has been illustrated and described herein in detail in connection with the latter type of hammer inasmuch as the causes which have given rise to the invention are considerably more prevalent in connection with an indestructible hammer than they are in connection with a claw hammer of the wooden handle or tubular steel handle type.

An indestructible hammer of the aforementioned type is a comparatively recent development in the field of hammer construction, such a hammer to a limited extent supplanting or supplementing the widely known and used hickory handle type claw hammer. An indestructible hammer, as currently constructed, offers a few advantages over a conventional claw hammer of the hickory handle type, but is also possessed of numerous limitations. The advantages which make it popular are increased strength and a permanent union between the hammer head and the shank. In the case of a wooden handle type claw hammer having an impact head for nail-driving purposes and integral claws for nail-pulling or removing purposes, the hammer will ordinarily withstand even the roughest usage when put to the use for which it is intended but when put to unintended uses, as, for example, wrecking, will frequently be subject to handle breakage or looseness in the joint between the handle and the impact head. This is particularly true after the wooden handle has dried out, as it invariably will, in time. Such is not the case with an indestructible claw hammer having an integral steel shank. These factors, together with the fact that an indestructible hammer possesses design possibilities whereby it may be made in a variety of attractive styles possessing eye-appeal, are ascribed as possible reasons why such a hammer has met with appreciable success on the market.

On the other hand, an indestructible hammer of the type briefly outlined above and as presently manufactured is possessed of numerous limitations, principal among which are: (1) lack of resiliency which renders it awkward in the hand of an experienced carpenter or workman, and (2) the tendency for impact to set up undesired vibrations.

An indestructible type hammer, as it originally appeared on the market, was invariably in the form of a solid steel unit comprising a head, a pair of claws, and a shank. With such a hammer, the force of the impact is carried directly from the head into the shank where it is felt by the hand of the user. At the same time, a secondary and slightly out-of-phase impact is applied to

the hand of the user by reason of the initial shock traveling across the head and into the claws which are caused to vibrate and send a secondary impact back into the shank following closely the initial and somewhat stronger impact force. Thus, the solid steel construction of an indestructible claw hammer does not afford the shock-absorbing resiliency of an conventional wooden handle claw hammer.

Vibratory effects such as have been described above are not only annoying to the user of the hammer, but they weaken the hammer structurally so that, in time, cleavage or fracture takes place, usually in the vicinity of one or both of the claws. Cleavage has been known to take place directly across the base of a claw, not at a time when the claw is put to use in extracting a nail, but at a time when the claw portion of the hammer is not in use, the cleavage being complete and in the form of a clean fracture across the claw with the claw falling off or separating from the impact head.

In an effort to minimize such undesired vibrations, it has been proposed to redistribute the metal of the impact head by forming therein a relatively deep rectangular socket, the socket extending crosswise of the head and in axial alignment with the shank and serving, in a measure, to divide the impact nose of the hammer head from the claw portion. The four side walls of the socket are relatively thin and much of the shock of impact is dissipated in these side walls. Furthermore, the socket is filled with a vibration dampening substance which further inhibits claw vibration. Such a hammer constitutes the subject matter of United States Patent No. 2,884,969, granted on May 5, 1959 to Clarence M. Lay and entitled "Hammer Construction With Shock Absorbing Means."

Reference to the above-mentioned patent will reveal the fact that the provision of such a socket in the head of an indestructible type hammer affords advantages other than that of its vibration dampening effect. For example, it enables the prescribed amount of metal namely, sixteen ounces, to be spread out, so to speak, so that the finished forged hammer head is of the accepted shape and size. It also contributes toward proper hammer balance and the attractive appearance of the finished hammer. These latter features are not particularly relevant to the present invention which is concerned primarily with vibration dampening. Reference may be had to the above-mentioned patent for a full understanding of the significance which is attached to the provision of a socket in the head of an indestructible hammer, and the discussion of such a socket herein will be confined to its vibration dampening qualities and only insofar as these qualities are related to the present invention.

The success with which such socketed indestructible type hammer has met and the continued favor on the market of such hammer have been justified in that the percentage of hammers which have been returned to the manufacturer for replacement has dropped sharply in comparison with hammers having solid unsocketed steel impact heads. Nevertheless, some socketed hammers continue to be returned. Whereas, before the advent of socketed indestructible type hammers, the percentage of returned hammers was on the order of 3%, a recent survey reveals that approximately 4,800 socketed hammers with broken or separated claws fractured or separated claws were returned to one manufacturer, this representing a fraction of 1%. It is, therefore, the aim of the present invention further to reduce the principal cause of claw cleavage or fracture, namely, claw vibration, not only in an indestructible type claw hammer, whether solid or socketed, but also in a wooden handle hammer and in a tubular steel handle hammer where cleavage occasionally occurs for

the same reason as outlined in connection with an indestructible type claw hammer.

This being the principal object of the invention, in furtherance thereof, it is contemplated that the forging of the hammer impact head be conducted as heretofore, whether in a socketed or a non-socketed indestructible type of claw hammer, or in a wooden or tubular steel handle claw hammer; that the conventional and prerequisite size, shape and weight of the hammer head be preserved substantially to the last detail so as to meet the rule of the experienced carpenter that the hammer head contain the proper amount of metal so that it will weigh exactly sixteen ounces, have the proper balance, present an attractive appearance, and otherwise meet all of the requirements for a carpenter's claw hammer outlined in the above-mentioned patent; and that the impact head deviate from the standard impact head solely by the provision of a vibration dampening rib or web on the inside surface of each claw and running from the base of the claw well into the medial region thereof. Such a rib may have an incidental function of strengthening or rigidifying the claw, but its primary function is to inhibit claw vibration. Since the placement on the market of hammers having ribbed claws as described above, the number of hammers which have been returned by reason of fractured claws have been reduced to an insignificant percentage. Such ribs in no way interfere with the normal operation of the hammer, either for impact or nail-pulling purposes, nor do they change the size or weight of the hammer or, otherwise, affect the "feel" of the hammer in the hands of an experienced user.

The addition of such ribs to the claw region of a hammer head, whether the hammer be of the indestructible or the hickory handle type, lends itself to forging operations, a slight modification of the forging dies being all that is necessary to effect the addition.

In order to attain the desired vibration dampening effect, placement of the ribs on the hammer head is rather critical and it is necessary that the ribs extend from the claw side of the body portion of the hammer head outwardly along the two claws and well beyond the so-called crotch of the V-shaped notch or bifurcation which exists between the inner ends of the two outwardly and rearwardly diverging claws. Additionally, the ribs must taper to nothingness as they merge into the metal of the claws, for otherwise the claws would be subject to fatigue and ultimate failure at the two points of rib termination. Finally, the ribs must be closely nested within the trough region which exists between the claw portion of the hammer head and the hammer head body, and for such close nesting, the ribs must be curved in the direction of their length. Otherwise, the magnitude of the ribs would add weight to the hammer head and render it unsuitable for carpenter's use for the reasons outlined above in connection with carpenters' preferences or demands.

In the accompanying single sheet of drawings forming a part of this specification, two illustrative embodiments of the invention have been shown.

In this drawing:

FIG. 1 is a side elevational view of an indestructible carpenter's claw hammer constructed in accordance with the principles of the present invention, certain parts of the hammer being broken away in the interests of clarity;

FIG. 2 is a sectional view taken on the line 2—2 of FIG. 1;

FIG. 3 is a sectional view taken on the line 3—3 of FIG. 2 in the direction indicated by the arrows;

FIG. 4 is a sectional view taken on the line 4—4 of FIG. 2 in the direction indicated by the arrows;

FIG. 5 is a fragmentary side elevational view similar to an end region of FIG. 1 and showing the invention applied to a carpenter's claw hammer of the wooden handle type; and

FIG. 6 is a sectional view taken on the line 6—6 of FIG. 5.

Referring now to the drawing in detail, and in particular to FIGS. 1 to 4, inclusive, the invention has, for exemplary purposes, been illustrated herein as being applied to a carpenter's claw hammer of the indestructible type and which, for purposes of discussion herein, is of more or less standard dimensions, i.e., it is provided with a sixteen-ounce head, a thirteen-inch shank, and has a longitudinal spread across the head portion of five and one-half inches. While other dimensions and weights are contemplated, the weights and dimensions mentioned above will, if adhered to, provide a hammer which is generally acceptable to carpenters and similar tradesmen.

The hammer head of the claw hammer of FIGS. 1 to 4 is designated in its entirety by the reference numeral **10**. It is a forged article and is integrally formed with a shank **12** which constitutes a portion of the hammer handle. The head **10** in the illustrated form of the invention is of the bell-faced type and includes a cylindrical impact head proper **14** having a circular impact surface **16**. The impact head proper **14** is connected to one side of the medial body portion **18** of the head by a constricted portion **20** which is polygonal in tranverse section. The other side of the body portion **18** is connected to the claw region **22** of the head, such region being bifurcated at **24** to provide the usual outwardly diverging claws **26**. The base part of the claw region **22** merges with the body portion **18** of the head **10** along a gradually-formed curved surface **28** as is customary in the formation of these indestructible type hammers. The medial body portion **18** of the hammer head **10** is formed with a relatively deep opening or socket **30** therein. Such socket is generally rectangular in cross section as shown in FIG. 2 and the four side walls **31** thereof converge inwardly toward each other in the outer regions of the socket. The bottom wall of the socket is slightly dished as shown at **32** in FIG. 1.

The socket **30** is provided for the purpose of inhibiting destructive harmonic vibration of the claws **26** and constitutes the principal feature of the invention illustrated in the aforementioned United States Patent No. 2,884,969. It forms no part of the present invention, but since the present invention is directed to vibration inhibiting means and since in an indestructible-type hammer having such a socket and also embodying the features of the present invention, there is a cooperating relationship which produces a hammer which is superior in anti-vibration characteristics to a hammer not employing such a socket, the invention has been illustrated in FIGS. 1 to 4, inclusive, and described herein in connection with a claw hammer, the head of which has a socket.

The shank **12** is comprised of a proximate grip section **34** and a distal connecting section **36** by means of which the grip section is operatively connected to the body portion **18** of the head **10**. The distal section **36** is generally elliptical in transverse cross section, the ellipse having a relatively short minor axis and a relatively long major axis so that this section of the shank is relatively thin in the transverse direction of the hammer as a whole. The proximate grip section **34** is generally flat and the longitudinal side edges thereof are formed with marginal ribs **38** so that the section **34** is generally H-shaped in cross section. A tubular handle proper or sheath **40**, which may be formed of rubber, leather or the like, has a relatively deep socket **42** therein, and the grip section **34** of the shank **12** fits snugly in said socket. Preferably, the grip section **34** and the sheath **40** are connected by telescoping the sheath over the grip section of the shank during the final assembly of the hammer. The shank **12** forms no part of the present invention, a similar shank being shown and described in United States Patent No. 2,983,296, granted on May 9, 1961 and entitled "Handle Construction for Hammers and Similar Impact Tools."

The rectangular socket **30** in the medial body portion **18** of the hammer head **10** may be left exposed so that

it assumes the appearance which it has when it emerges from the forging press, but preferably, it is filled with a vibration dampening, substance, such as a suitable thermoplastic or thermosetting resin as indicated at **44**. Alternatively, it may be filled with a wooden plug.

Still referring to FIGS. 1 to 4, inclusive, the individual claws **26** of the claw region **22** of the hammer head **10** taper in thickness from their region of juncture with the medial body portion **18** toward the feature edges **50** which are provided at the distal ends thereof. The claws **26** are slightly divergent to afford the bifurcation **24**, and preferably they are of approximately the same transverse width throughout. The opposed inside faces **52** of the claws **26** are relieved on oppositely slanting biases and the region of the head at the base of the claws **26** is relieved as at **54** (see FIG. 2). The effect of these relieved areas is to provide sharp opposed inside claw edges **56** which will slide beneath the head of a nail to be extracted so that the nail shank may become wedged in the crotch region of the bifurcation with the nail head finding clearance in the relief area **54**, immediately prior to applying leverage to the handle shank **12** for nail-extracting purposes.

Each claw is formed with a generally longitudinally extending rib **60** which is tapered in transverse cross section as seen in FIG. 4 and extends from the adjacent side wall **31** of the socket **30** well into the medial region of the claw, the rib being of relatively small proportions, and due to the gradually curved surface **28** of the claw, being generally of half-moon configuration in longitudinal section and, insofar as its width is concerned, completely filling the crotch region which exists between the claw and the body portion of the head. Each rib **60** is centered between the two longitudinal side edges of the claw on which it is formed and presents substantially equal longitudinal extents on opposite sides of a plane passing transversely of the claw region and through the crotch of the bifurcation **24**. Stated otherwise, each rib is closely confined to the extreme bottom region of the trough which exists between the curved claw region and the body portion of the hammer head and follows the curvature of such trough and has its mid-point substantially coincident with a transverse plane passing through the crotch of the bifurcation **24**. Still further, the outer ends of the ribs taper into nothingness where they merge with the inside surfaces of the two claws **26** at points approximately midway in the length of the claws. The point at which each rib disappears into the metal of the associated claw has been designated at **62**. The ribs **60** taper more abruptly into the outside surface of the adjacent side wall **31** of the socket **30** as indicated at **64** and the effect of the ribs is to thicken a portion of such adjacent side wall in limited regions thereof.

While the two ribs **60** may to a certain extent serve to reinforce and strengthen the claws on which they are formed, such a function is not the primary function of the ribs. As a matter of fact, the claws **26**, when formed without the ribs, are sufficiently strong to withstand all nail-extracting operations to which the hammer may be put, even in the hands of a workman of superior strength. The claw cleavage which takes place in actual practice seldom occurs during any given nail-pulling operation, but rather it occurs as the result of cumulative weakening or fatigue of the metal of the claws due to high-frequency vibration of the claws under impact influences and including both primary and secondary vibratory effects as previously described herein. More often than not, a claw fracture or separation takes place during impact when the claw is not in use, or during a vibratory episode immediately following such impact.

Invariably and without exception, when cleavage of a hammer head claw takes place, the cleavage occurs at the base of a claw, i.e., at the crotch region of the bifurcation between claws. Impact tests invloving many hundreds of hammer blows against a steel anvil indicate that, due to the tuning fork effect mentioned above, fatigue first occurs at the base of the claw and after a few hundred blows, this fatigue evidences itself by a minute crack extending away from the crotch. Thereafter, it is a matter of a relatively few blows, for example, a few dozen blows, before the claw will fly off. In each instance, however, the complete claw will be broken off, but never a portion or fragment of a claw. Because the ribs of the present invention bridge the crotch of the bifurcation **24** as heretofore described, this tendency for fatigue, cracking and ultimate rupture is inhibited. The exact phenomena by means of which the ribs **60** inhibit vibration is a matter of conjecture, but it is reasonable to assume that the generally triangular gusset effect which the ribs offer is one factor which contributes toward vibration dampening. Additionally, the increasd thickness of the portion of each claw which embodies the rib tends to decrease the amplitude of any vibrations which may be set up in this region of the hammer head. It is a well-known principle of physics that the diameter of the tangs of a tuning fork of given length controls the amplitude of vibration. Thus, in a hammer head such as that described above, the amplitude of any vibratory effects which may be occasioned in the claw region of the hammer head is reduced to very small proportions, and with the amplitude thus decreased, the duration of a given set of vibrations is correspondingly reduced. Stated otherwise, the dying-out effect is quite rapid.

In connection with an indestructible-type hammer of the type wherein the head is socketed, the force of any impact shock traveling from the impact head proper **14** to and through the thin side walls **31** of the socket **30** is materially reduced before it reaches the claw region **22**. Whatever vibratory effect remains for transmission to the claw region is of relatively low amplitude, and once it has been assimilated by the claw region, the ribs **60** on the claws serve rapidly to decrease the amplitude of individual claw vibration until all vibratory energy remaining in the claws has been spent.

In FIGS. 5 and 6, the invention has been shown as being applied to a wooden handle type claw hammer, the handle portion of which has been fragmentarily shown and designated at **112** and the head portion of which has been designated at **110**. The shape of the head **110** is similar in many respects to the shape of the head **10** of the indestructible claw hammer of FIGS. 1 to 4, inclusive, and, therefore, in order to avoid needless repetition of description, similar reference numerals but of a higher order have been applied to the corresponding parts as between FIGS. 1 to 4 and FIGS. 5 and 6, respectively.

The central socket **130** in the head portion **110** extends completely through the medial body portion **118** and provides a generally rectanglar sleeve portion or tubular extension of the medial body portion. The socket **130** receives the distal end region of the handle **112** in the usual manner, a wedge **113** being utilized to hold the parts secure. The socket **130** functions somewhat in the manner of the socket **30** to dampen vibratory effects in the head **110**. The ribs **160** are similar to the ribs **30**. They are similarly disposed on the claws **126** and serve the same identical purpose or function as the ribs **60**.

The invention is also applicable to a hammer having a head portion similar to the head portion **110** of the hammer of FIGS. 5 and 6, but employing a tubular steel handle portion or shank. No illustration of such a hammer has been made herein, but it will be understood that the head portion thereof will be substantially the same as the illustrated head portion **110** with a tubular steel shank portion substituted for the wooden handle portion **112**. Irrespective, however, of whether the vibration dampening ribs be applied to the indestructible-type hammer of FIGS. 1 to 4, inclusive, the wooden handle-type hammer of FIGS. 5 and 6, or the illustrated tubular steel shank-type of hammer, the essential features of the invention remain substantially the same in each instance.

It will be understood that the present invention is concerned solely with forged steel hammer heads, the hammer heads illustrated herein being well-adapted to forging operations and requiring no machine operations other than a slight modification of the forging dies employed in connection with the forging of conventional hammer heads. Furthermore, the forging of the present hammer heads requires no skills or operation beyond those employed in the forging of conventional hammer heads. The invention has no application in connection with cast hammer heads since such hammer heads are confined to children's toy hammers. A cast iron hammer head will fracture into many pieces, often after the second or third blow on a steel anvil. The use of a cast iron hammer by a carpenter would be unthinkable.

The invention is not to be limited to the exact arrangement of parts shown in the accompanying drawing or described in this specification as various changes in the details of construction may be resorted to without departing from the spirit of the invention. Therefore, only insofar as the invention has been particularly pointed out in the accompanying claims is the same to be limited.

Having thus described the invention what I claim as new and desire to secure by Letters Patent is:

1. In a carpenter's claw hammer, a forged steel head including a medial body portion having a generally rectangular opening extending completely therethrough, an impact head proper integral with the body portion and projecting outwardly from one end thereof, a bifurcated nail-pulling claw region integral with the body portion and projecting outwardly from the opposite end thereof, and a tubular sleeve-like extension integral with the body portion, projecting laterally outwardly therefrom, and through which extension the rectangular opening extends, said sleeve-like extension being adapted for reception therethrough of the distal end of an elongated handle shank with the shank projecting through the extension and into the opening and substantially filling the extension and opening, said medial body portion having substantially flat sides which are inclined toward each other in the direction of extent of said handle shank, said nail-pulling claw region including two counterpart divergent claws which taper in thickness outwardly away from said body portion and slope with respect to the axis of said shank in a direction so that their inside surfaces extend generally at an acute angle to the axis of the shank, said claws defining therebetween a bifurcation presenting a relatively sharp crotch which is disposed substantially midway between the proximate and distal ends of the claw region, said claw region being recessed on the inner side thereof and in the vicinity of the bifurcation and providing adjacent opposed nail head-engaging sides which are formed on the two claws respectively and intersect the outside surfaces of the claws to define opposed feather edges adapted to underlie and engage a nail head during nail-pulling operations, and a narrow elongated imperforate vibration-inhibiting rib formed on the inside surface of each claw and extending from the sleeve-like extension, across the juncture between such extension and the body portion, and along the claw region past said crotch and terminating at a point intermediate the distal end of the claw and said crotch, said rib being of less transverse thickness than the transverse thickness of the inside surface of the claw on which it is formed, being spaced inwardly from the side edges of the claw and, insofar as its width is concerned, closely hugging the trough region existing between the claw and body portion of the head and following the contour thereof.

2. In a claw hammer, an integral one-piece forged steel head and shank assembly including a head portion from which there projects outwardly an elongated shank portion the free end region of which constitutes a handle for manipulation of the hammer, said head portion being formed with an impact head proper at one end thereof, a bifurcated nail-pulling claw region at the other end thereof, and a medial body portion from which the shank portion extends outwardly, said medial body portion having substantially flat sides which are inclined toward each other in the direction of said shank portion and being formed with a relatively deep socket which is rectangular in cross section and the axis of which is in alignment with the longitudinal axis of said shank portion, said socket being of such depth that it extends completely through said head portion and into the adjacent end of the shank portion so as to define, in combination with said shank portion, relatively thin front and rear side walls in the vicinity of the impact head proper and of the claw region respectively, and, in combination with said flat sides, relatively thin lateral side walls respectively, said nail-pulling claw region including two counterpart claws each of which tapers in thickness outwardly away from said rear wall and slopes with respect to the axis of the elongated shank portion in a direction so that its inside surface extends generally at an acute angle to the axis of the shank portion, said claws defining therebetween a relatively sharp crotch which is disposed substantially midway between the proximate and distal end of the claw region, said claw region being recessed on the inner side thereof and in the vicinity of the bifurcation and providing adjacent nail head-engaging sides which are formed on the two claws, respectively, and intersect the outside surfaces of the claws to define opposed feather edges adapted to underlie and engage a nail head during nail-pulling operations, and a narrow elongated imperforate vibration-inhibiting rib integrally formed on the inside surface of each claw and extending from the body portion along the claw region past said crotch and terminating at a point intermediate the distal end of the claw and said crotch, said rib being of less transverse thickness than the transverse thickness of the inside surface of the claw on which it is formed, being spaced inwardly from the side edges of the claw and, insofar as its width is concerned, closely hugging the trough region existing between the claw and body portion of the head and following the contour thereof.

References Cited by the Examiner

UNITED STATES PATENTS

332,909	12/85	Kizer	265—26
585,123	6/97	Severance	145—29
1,287,619	12/18	Benjamin	254—26
2,884,969	5/59	Lay	145—29

WILLIAM FELDMAN, *Primary Examiner.*

MILTON S. MEHR, *Examiner.*