United States Patent

[11] 3,589,575

[72] Inventor **Melvin Axler**
166-25 Powell Cove Blvd., Beechhurst, N.Y. 14609

[21] Appl. No. **850,392**
[22] Filed **Aug. 15, 1969**
[45] Patented **June 29, 1971**

[54] **SELECTIVELY INTERCONNECTABLE WATCHCASE AND STRAP CONSTRUCTION**
1 Claim, 7 Drawing Figs.

[52] **U.S. Cl.** ..... **224/4 E,** 24/265 EC
[51] **Int. Cl.** **A44c 5/00**
[50] **Field of Search** ..... 24/265 EC, 265 WS; 63/3, 4; 224/4.5

[56] **References Cited**

UNITED STATES PATENTS

1,467,465	9/1923	Wiedmann	63/3 X
2,185,736	1/1940	Prestinari	24/265 WS
2,612,139	9/1952	Collins	63/3 X
3,165,884	1/1965	Gwinner et al.	224/4.5 X

Primary Examiner—Gerald M. Forlenza
Assistant Examiner—Jerold M. Forsberg
Attorney—Charles E. Temko

ABSTRACT: An improved watchcase construction in which the wrist strap is carried by a strap-retaining element slidably engageable with an end wall of the case bezel. The bezel includes channel-forming means in a rectilinear wall thereof, and the strap-retaining element includes an elongated channel-engaging member interconnected by a web portion to the remaining parts of the element. Detent means is provided to maintain the two elements in fully assembled condition, as is stop means for determining said position.

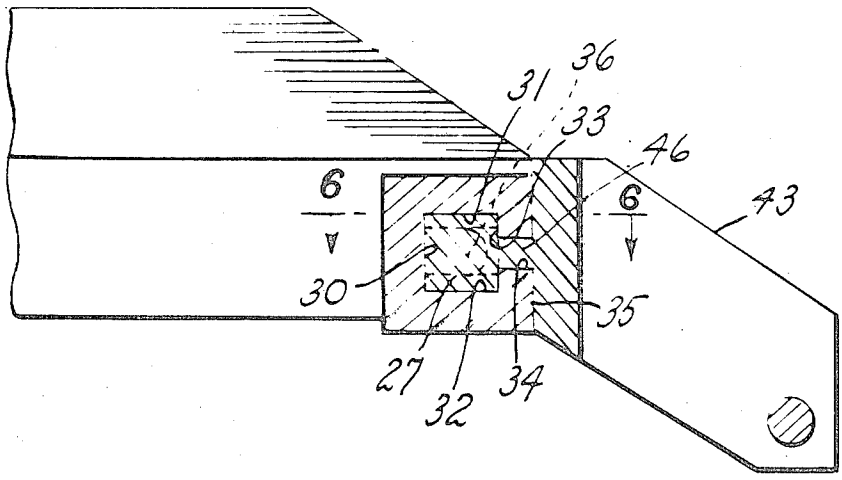

Fig. 1

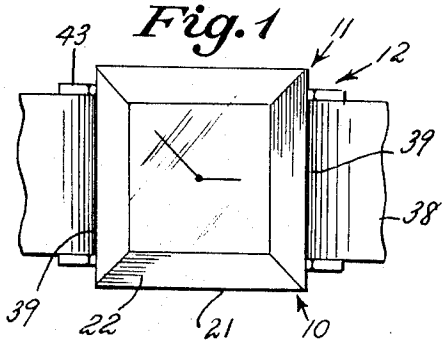

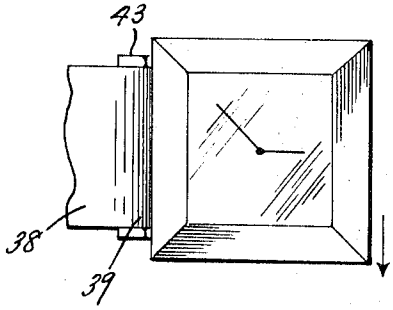

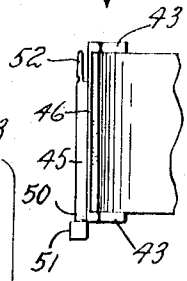

Fig. 2

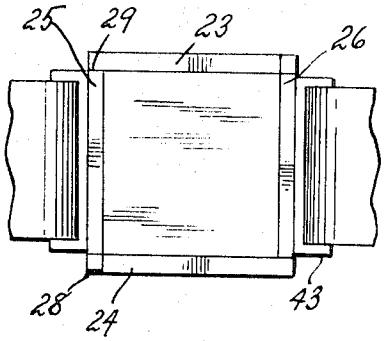

Fig. 3

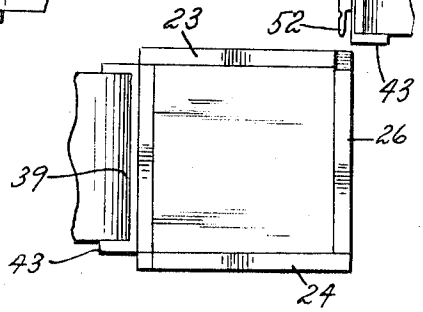

Fig. 4

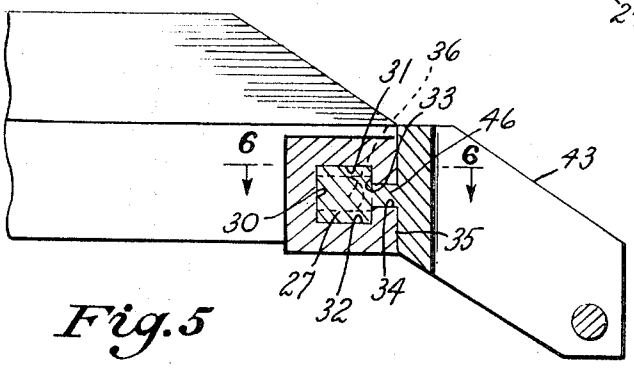

Fig. 5

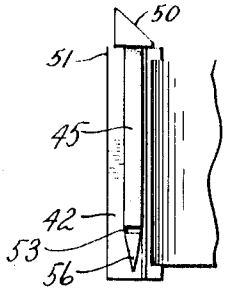

Fig. 7

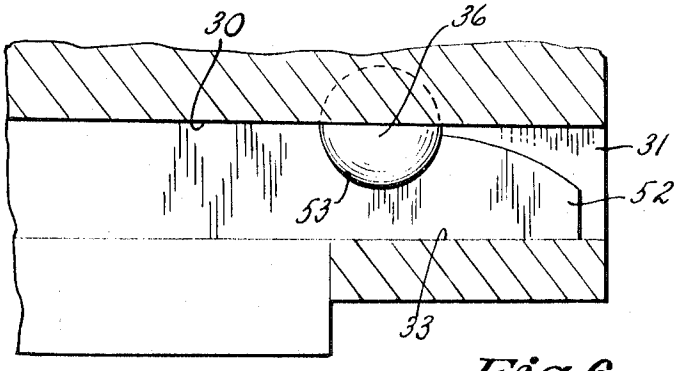

Fig. 6

SELECTIVELY INTERCONNECTABLE WATCHCASE AND STRAP CONSTRUCTION

This invention relates generally to the field of jewelry, and more particularly to an improved watchcase construction in which the wrist strap element may be conveniently detached, so that another strap may be substituted without the use of tools and the like. The construction is particularly useful when it is desired to use a strap in which the conventional buckle is eliminated, or where it is desired to conveniently substitute a more decorative watch band for a less decorative strap, depending upon the requirements of a particular occasion.

It is among the principal objects of the present invention to provide a combination watchcase and strap-retaining means in which the two ends or a strap of fixed length may be provided with case-engaging means selectively interconnectable with the side surfaces of a watchcase or bezel.

Another object of the invention lies in the provision of an improved structure of the class described which may present an unusually attractive and novel appearance owing to the elimination of conventional buckle means.

Yet another object of the invention lies in the provision of an improved watchcase and strap-retaining construction in which the means for interconnecting the watchcase with the strap-engaging means is of a very minute size, so as to be practically invisible when the watch is worn.

Yet another object of the invention lies in the provision of an improved watch clasp construction which may be manipulated conveniently using the fingers of only a single hand.

A feature of the disclosed embodiment lies in the ready adaptability of the strap-retaining means to any type of conventional strap, bracelet or the like.

These objects and feature, as well as other incidental ends and advantages, will more fully appear in the progress of the following disclosure, and be pointed out in the appended claims.

In the drawing, to which reference will be made in the specification, similar reference characters have been employed to designate corresponding parts throughout the several views.

FIG. 1 is a fragmentary view in elevation of an embodiment of the invention.

FIG. 2 is a similar view thereof showing the disengagement of one end of a strap from the watchcase or bezel.

FIG. 3 is a rear elevational view of the case or bezel.

FIG. 4 is a rear elevational view, showing the component parts in altered relative position as in FIGURE 2.

FIG. 5 is an enlarged fragmentary sectional view showing the details of the means interconnecting the case and strap-retaining elements.

FIG. 6 is a sectional view corresponding to the plane 6–6 in FIGURE 5.

FIG. 7 is a side elevational view of a detached strap-retaining element.

In accordance with the invention, the device, generally indicated by reference character 10, comprises broadly: a case element 11 and a strap-retaining element 12.

The case element 11 is illustrated in the drawing as being of generally rectangular configuration, but it will be understood by those skilled in the art to which the invention pertains, that

with minor modification the case may also be of circular, oval or other desired shape. The bezel portion thereof includes a rectangular frame 21 having a front wall 22, sidewalls 23 and 24, as well as end walls 25 and 26. At least one of the end walls 25, 26 is provided with an elongated channel 27 commencing at an open end 28 and terminating at a closed end 29. The channel may be of generally rectangular cross section for purposes of facilitating alignment, and bounded by an inner surface 30, side surfaces 31 and 32, and an outer surface 33. A slot 34 interconnects the outer surface 33 with an external surface 35. Extending into the channel formed by the surfaces 30—33 is a detent pin 36 (see FIG. 6) selectively engageable with a corresponding notch in the strap-retaining element when the latter is in fully seated position.

The strap-retaining member 12 includes a conventional strap member 38 having looped ends 39 retained by conventional pins to a case-engaging member 41. The member 41 includes a transversely extending base portion 42 having end flanges 43 of conventional type. Oppositely disposed from the flanges 43 is a channel-engaging portion 45 connected to the transverse base portion 42 by a web member 46 of length somewhat shorter than that of the channel-engaging portion 45.

The channel-engaging portion 45 conforms in cross section to the channel formed by the surfaces 30—33, inclusive, and is bounded by side surfaces 47, an outer surface 48, and an inner surface 49. An outer end 50 of the portion 45 is terminated by an enlarged head 51 which abuts the open end 28 of the channel 27 when engagement is completed. An inner end 52 is of tapered configuration and is flexible to a limited degree by virtue of the fact that it is not interconnected to the web 46. A detent slot 53 in the end 52 is positioned to engage the pin 36 until such time as manual disengagement overcomes the resiliency of the end 52, and permits the channel-engaging portion 45 to be slid from engagement with the channel 27.

Where desired, the channel and corresponding channel-engaging member may be of arcuate configuration, rather than rectilinear configuration, although, in such cases, somewhat greater manipulative skill will be required to accomplish engagement and disengagement.

I wish it to be understood that I do not consider the invention limited to the precise details of structure shown and set forth in this specification, for obvious modifications will occur to those skilled in the art to which the invention pertains.

I claim:

1. Selectively interconnectible watchcase and strap construction comprising: a case element and a strap retaining element; said case element having at least one sidewall, said wall defining an elongated channel having a principal axis and a slot having an axis parallel to that of said channel and communicating therewith; said strap retaining element including a main body portion having means thereon for engaging the end of a watch strap, an elongated channel-engaging portion, and a web member interconnecting said channel-engaging portion to said main body portion; said channel-engaging portion being slidably disposed within said elongated channel to detachably interconnect said case element and said strap-retaining element; and resilient detent means within said channel for retaining said elements in engaged condition.