(12) INTERNATIONAL APPLICATION PUBLISHED UNDER THE PATENT COOPERATION TREATY (PCT)

(19) World Intellectual Property Organization
International Bureau

(43) International Publication Date
26 November 2009 (26.11.2009)

PCT

(10) International Publication Number
WO 2009/143255 A1

(51) International Patent Classification: *A61M 5/20* (2006.01)

(21) International Application Number: PCT/US2009/044693

(22) International Filing Date: 20 May 2009 (20.05.2009)

(25) Filing Language: English

(26) Publication Language: English

(30) Priority Data:

12/123,888	20 May 2008 (20.05.2008)	US
12/178,447	23 July 2008 (23.07.2008)	US

(71) Applicant *(for all designated States except US)*: **AVANT MEDICAL CORP.** [US/US]; One Amgen Center Dr., Thousand Oaks, CA 91320-1799 (US).

(72) Inventors; and

(75) Inventors/Applicants *(for US only)*: **SLATE, John, B.** [US/US]; . (US). **BURK, Michael, W.** [US/US]; . (US). **KOERNER, Richard, J.** [US/US]; . (US). **MAGERS, Corey, M.** [US/US]; . (US). **BARNES, Andrew, C.** [US/US]; . (US).

(74) Agent: **SCHWARZ, Paul, A.**; Duane Morris LLP, P.o. Box 5203, Princeton, NJ 0843-5203 (US).

(81) Designated States *(unless otherwise indicated, for every kind of national protection available)*: AE, AG, AL, AM, AO, AT, AU, AZ, BA, BB, BG, BH, BR, BW, BY, BZ, CA, CH, CN, CO, CR, CU, CZ, DE, DK, DM, DO, DZ, EC, EE, EG, ES, FI, GB, GD, GE, GH, GM, GT, HN, HR, HU, ID, IL, IN, IS, JP, KE, KG, KM, KN, KP, KR, KZ, LA, LC, LK, LR, LS, LT, LU, LY, MA, MD, ME, MG, MK, MN, MW, MX, MY, MZ, NA, NG, NI, NO, NZ, OM, PG, PH, PL, PT, RO, RS, RU, SC, SD, SE, SG, SK, SL, SM, ST, SV, SY, TJ, TM, TN, TR, TT, TZ, UA, UG, US, UZ, VC, VN, ZA, ZM, ZW.

(84) Designated States *(unless otherwise indicated, for every kind of regional protection available)*: ARIPO (BW, GH, GM, KE, LS, MW, MZ, NA, SD, SL, SZ, TZ, UG, ZM, ZW), Eurasian (AM, AZ, BY, KG, KZ, MD, RU, TJ, TM), European (AT, BE, BG, CH, CY, CZ, DE, DK, EE, ES, FI, FR, GB, GR, HR, HU, IE, IS, IT, LT, LU, LV, MC, MK, MT, NL, NO, PL, PT, RO, SE, SI, SK, TR), OAPI (BF, BJ, CF, CG, CI, CM, GA, GN, GQ, GW, ML, MR, NE, SN, TD, TG).

Published:

— *with international search report (Art. 21(3))*

(54) Title: AUTOINJECTOR SYSTEM

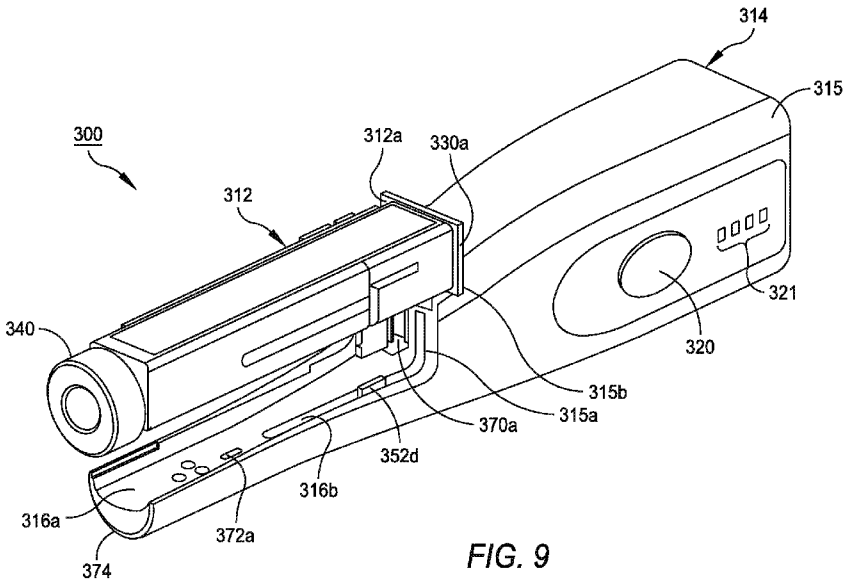

FIG. 9

(57) Abstract: An autoinjector system for injecting a fluid medicament into a patient includes a re-usable autoinjector, and a disposable cassette loaded with a hypodermic syringe pre-filled with a fluid medicament. The autoinjector includes a first motor for injecting a needle of the hypodermic syringe into the patient and a second motor for expelling the fluid medicament from the syringe.

WO 2009/143255 A1

AUTOINJECTOR SYSTEM

RELATED APPLICATIONS

[0001] This application claims the priority benefits of U.S. Application No. 12/123,888, filed May 20, 2008 and U.S. Application No. 12/178,447, filed July 23, 2008, the entire disclosures of which are incorporated herein by reference.

FIELD

[0002] The present disclosure relates to a system and method for injecting medicaments into a patient from a hypodermic syringe. More particularly, the present disclosure relates to an auto-injector and a cassette useable with the auto-injector, which conceals the injection needle of a hypodermic syringe before and after an injection.

BACKGROUND

[0003] Pre-filled hypodermic syringes provide several advantages for the home-use market. These advantages include that pre-filled syringes may be prepared for each medicament with exactly the required dosage. Further, they are easily operated, by merely advancing the stopper of the syringe. Aside from the costs of the particular medication that is being used, pre-filled syringes are also economically manufactured. Consequently, all these advantages make pre-filled syringes commercially appealing.

[0004] Nevertheless, pre-filled syringes also have a significant drawback in the marketplace. Specifically, many users are either frightened by an exposed needle or feel they are inherently incapable of performing an injection. Because of aversions to exposed needles, as well as the many health and safety issues that may be involved, various types of injectors and other devices have been developed for the specific purpose of concealing needles from the user and automating the injection task to assist the user in performing the injection.

[0005] In order to inject a fluid medicament into a patient when using a hypodermic syringe, generally three separate and distinct tasks must be performed. These are: 1) insertion of the needle into the patient; 2) injection of the fluid medicament from the syringe into the patient; and 3) withdrawal of the needle after the injection has been completed. For each task, the magnitude and direction of forces on the syringe, as well as the location of their application, are different from the other tasks. For

instance, compare the task of inserting the needle, with the task of injecting the fluid medicament. Insertion of the needle requires that only minimal forces be applied on the syringe, and that they be applied for only a very short period of time. On the other hand, injection of the medicament requires a much greater force be applied. Further, this force must be applied on the plunger of the syringe for what will typically be a relatively longer period of time. In comparison with both of these tasks, needle withdrawal requires the application of a force in the opposite direction. These, and other similar considerations, become important when the injection process is to be automated.

[0006] Springs for generating forces on a syringe in an automated process have been used heretofore for various purposes. A characteristic of springs, however, is that the magnitude and direction of a spring force are not variable. Consequently, springs do not lend themselves for so-called multi-tasking operations. This is particularly so where precise control over a syringe injection operation is required, and different magnitude forces are sequentially required in the same direction (e.g. needle insertion and medicament injection). This can be particularly problematic in situations where it may be desirable to use the same device, at different times, to inject different medications, with different fluid viscosities.

[0007] In addition to the mechanical considerations mentioned above, the design of an auto-injector also requires user-friendly considerations. In particular, it is desirable that the injection needle of a syringe be operationally concealed from the view of a user. Preferably, this concealment may be maintained before, during and after an injection procedure. Further, it is desirable that operation of the syringe be limited to only those times when the syringe is properly positioned for an injection.

[0008] Accordingly, an improved medicament injection system is needed, which hides the syringe needle during use, is capable of accommodating different force requirements during an injection procedure, is relatively easy and inexpensive manufacture, and is easy to use.

SUMMARY

[0009] In accordance with the present disclosure, a system for injecting fluid medicaments into a patient from a pre-filled hypodermic syringe, employs a cassette that is pre-loaded with the pre-filled syringe. For this combination, the hypodermic

syringe can be loaded into the cassette during manufacture, or be subsequently loaded by a contract service provider. In either case, the syringe needle is concealed inside the cassette and hidden from the view of the end-user. Importantly, the only preparation required by the end-user (e.g. the patient that is to self-administer the fluid medicament) is to mount the cassette onto a drive mechanism.

[0010] Structurally, the system of the present disclosure envisions a pre-filled syringe that will have a needle, and it will have a stopper for expelling the fluid medicament from the syringe through the needle. Further, the pre-filled syringe will be firmly held on the cassette in a position where the syringe needle is concealed and hidden from view. As envisioned for the present disclosure, the pre-filled hypodermic syringe can be firmly held in the concealed position, in any of several different ways. These include, the use of a latching mechanism, an adhesive, or a flexible abutment.

[0011] Once the cassette has been loaded with the pre-filled hypodermic syringe, the cassette can be engaged with a drive mechanism. In detail, the drive mechanism includes two separate motors that perform two different functions. A first motor is provided for engaging the syringe in its concealed position where its needle is hidden. With this engagement, the first motor then moves the syringe and its needle from the concealed position and into an exposed position where the needle is extended for insertion into the patient. While the needle is inserted into the patient, a second motor is provided for pushing the stopper on the syringe to expel fluid medicament from the syringe. After the injection has been completed, the first motor then withdraws the syringe and its needle back into the concealed position. Importantly, after it has been withdrawn the syringe is again firmly held in the concealed position, inside the cassette. Thus, the needle remains hidden from view at all times during an injection procedure. Further, as noted above, the syringe is firmly held inside the cassette to insure the syringe needle does not inadvertently extend from the cassette.

[0012] In operation, an end-user mounts a pre-loaded cassette on the drive mechanism. The end-user then removes a protective cover from the syringe needle and positions the system at a site where an injection is to be made. A button on the system is then pushed to activate the drive mechanism for an injector procedure. After the injection has been completed, the cassette, with its now empty syringe, can be removed from the drive mechanism and discarded.

[0013] In accordance with the present disclosure an autoinjector system includes a disposable cassette that operates in combination with a reusable injector. Prior to an

engagement of the cassette with the injector, however, a pre-filled syringe is mounted and latched onto the cassette. When latched, the syringe is held on the cassette in a home position. For the present disclosure, this pre-filled syringe may be of any type syringe well-known in the pertinent art that has a fluid chamber with an injection needle at its distal end, and a plunger that can be advanced into the fluid chamber. When the cassette, with syringe, is engaged with the injector, the system is ready for use.

[0014] Operation of the system of the present disclosure requires two separate motors that are individually mounted on the injector. Though they are mechanically independent of each other, the respective operations of these two motors must be coordinated. Specifically, a first motor is used to effect movements of the entire syringe assembly (i.e. syringe chamber, injection needle and plunger are all moved together). On the other hand, a second motor is employed to advance the plunger into the fluid chamber for performing an injection of a fluid medicament.

[0015] In a duty cycle of the system, the first motor moves a drive rod into engagement with the syringe. With this engagement, the drive rod also releases the latch that otherwise holds the syringe in the home position. After the syringe has been released, the first motor then advances the syringe in a distal direction on the cassette. This movement inserts the injection needle into a patient. Further, the first motor can be used to abruptly stop the needle when a specified needle depth has been achieved. The first motor can then be used to help stabilize the needle during an injection of the medical medicament from the syringe.

[0016] As mentioned above, the injection of medical medicament from the syringe is accomplished using the second motor. In detail, once the needle has been properly inserted into the patient, the second motor moves a pusher to urge against the plunger of the syringe to advance the plunger into the fluid chamber of the syringe. Importantly, the second motor can be programmed to advance the plunger into the fluid chamber at a predetermined rate(s) for compliance with an injection protocol.

[0017] After the injection has been completed, the second motor withdraws the pusher. The first motor is then used again. Specifically, the first motor is now used to withdraw the injection needle from the patient, and to return the syringe to the home position on the cassette, where it is re-latched onto the cassette. The cassette can then be removed from the injector and discarded.

[0018] In order to control the concerted operations of the first and second motors, the system includes a microcomputer that is mounted on the injector. Importantly, the microcomputer operates the motors with different forces, and at different speeds for different purposes. More specifically, the first motor must operate quickly to insert the needle (e.g. about 0.1 meters/second (m/s) to 1.0 m/s), but it does not require much force to do so. Similarly, needle withdrawal by the first motor requires a minimal force. Unlike the first motor, however, the second motor will typically be required to generate greater forces for the injection of fluid medicament. And, accordingly, it will also typically operate at slower speeds. Further, and most importantly, different injections (i.e. advancements of the syringe plunger by the second motor) may require different injection rates. Thus, the second motor requires speed control provided by the microcomputer.

[0019] Together with the components mentioned above, the system of the present disclosure may employ a capacitance skin sensor of a type well known in the pertinent art. If used, such a sensor will allow the user to ascertain whether the system has been properly positioned for an injection. In detail, a metal foil is positioned at the extreme distal end of the injector to establish a capacitance signal whenever the foil is in contact with a skin surface of the patient. The function of this signal is actually two-fold. First, it can be used to prevent initial operation, if the system is not properly positioned. And, second, it can be used to interrupt operation of the system, if it becomes improperly positioned during an injection.

[0020] Further disclosed herein is a system for injecting a medicament into a patient. The system comprises an injector and a medicament cassette. The medicament cassette comprises a housing, a sleeve movable in the housing between first and second positions, and a syringe comprising a chamber for containing a medicament and an injection needle extending from the syringe chamber. The syringe chamber is at least partially disposed in the sleeve and the injection needle has a skin penetrating end opposite the syringe chamber. The skin penetrating end is disposed within the housing when the sleeve is in the first position and the skin penetrating end extends out from the housing when the sleeve is in the second position. The injector comprises a surface for removably mounting the cassette thereon, and a motor driven link having a first end engageable with a portion of the sleeve when the cassette is mounted on the surface. The link is provided for moving the sleeve from the first position to the second position.

[0021] Still further disclosed herein is a system for injecting a medicament. The system comprises an injector and a medicament cassette comprising a syringe for containing a medicament. The injector comprises a plunge rod for expelling the fluid medicament from the syringe, a motor for driving the plunge rod, and a switch operatively coupled to the motor, for allowing a user to set the motor to one of a plurality of different speeds. The plurality of different speeds correspond to a plurality of different injection rates of the system.

[0022] Also disclosed herein is a medicament cassette for an autoinjector. The medicament cassette comprises a housing, a sleeve movable in the housing between first and second positions, and a syringe comprising a chamber for containing a medicament and an injection needle extending from the syringe chamber. The syringe chamber is at least partially disposed in the sleeve. The injection needle has a skin penetrating end opposite the syringe chamber, the skin penetrating end disposed within the housing when the sleeve is in the first position and the skin penetrating end extending out from the housing when the sleeve is in the second position. A portion of the sleeve engages a drive link of the autoinjector, when the cassette is mounted on or in the autoinjector.

[0023] Further disclosed herein is an injector for injecting a medicament into a patient. The injector comprises a surface for removably mounting a cassette thereon, the cassette having disposed therein a sleeve holding a syringe containing the medicament and a motor driven link having a first end engageable with a portion of the cassette when the cassette is mounted on the surface, the link for moving the sleeve from the first position to the second position.

[0024] Also disclosed is a system for injecting a medicament into a patient, comprising an injector and a medicament cassette. The medicament cassette comprises a housing and a syringe comprising a chamber for containing a medicament and an injection needle extending from the syringe chamber, the injection needle having a skin penetrating end opposite the syringe chamber, the skin penetrating end disposed within the housing when the syringe is in a first position and the skin penetrating end extending out from the housing when the syringe is in a second position. The injector comprises a surface for removably mounting the cassette thereon, a motor driven link having a first end engageable with a portion of the syringe when the cassette is mounted on the surface, the link for moving the syringe from the first position to the second position.

[0025] Also disclosed is a medicament cassette for an autoinjector, comprising a housing and a syringe. The syringe comprises a chamber for containing a medicament and an injection needle extending from the syringe chamber, the injection needle having a skin penetrating end opposite the syringe chamber, the skin penetrating end disposed within the housing when the syringe is in a first position and the skin penetrating end extending out from the housing when the syringe is in a second position. A portion of the syringe engages a drive link of the autoinjector, when the cassette is mounted on or in the autoinjector.

[0026] Further disclosed is a system for injecting a medicament into a patient, comprising an injector and a medicament cassette. The injector comprises a surface for removably mounting the cassette thereon and a motor driven link having a first end for operating the cassette in a needle injection mode.

[0027] Further disclosed is a system for injecting a medicament, comprising an injector and a medicament cassette. The injector comprises a plunge rod for expelling a fluid medicament from a syringe, a motor for driving the plunge rod, and a switch operatively coupled to the motor, for allowing a user to select one of a plurality of different medicament injection rates of the system.

BRIEF DESCRIPTION OF THE DRAWINGS

[0028] Reference will now be made in detail to the aspects of the present disclosure, examples of which are illustrated in the accompanying drawings, wherein like reference numerals refer to like elements throughout.

[0029] FIG. 1 is a perspective view of an exemplary embodiment of an autoinjector system for injecting a medicament into a patient.

[0030] FIG. 2 is an exploded perspective view of a cassette of the autoinjector system of FIG. 1 with a pre-loaded, pre-filled hypodermic syringe.

[0031] FIG. 3A is a sectional view of the pre-loaded cassette, as seen along the line 3-3 of FIG. 1, with the pre-filled hypodermic syringe in a needled concealed (proximal) position.

[0032] FIG. 3B is a sectional view of the pre-loaded cassette shown in FIG. 3A with the syringe in a needled extended (distal) position after drug delivery.

[0033] FIG. 4 is an exploded perspective view of another embodiment of the cassette.

[0034] FIG. 5 is a sectional view of an alternate embodiment of the pre-loaded cassette, as seen along the line 3-3 in FIG. 1.

[0035] FIG. 6 is a perspective view of another exemplary embodiment of the autoinjector system showing the cassette engaged with the autoinjector.

[0036] FIG. 7 is an exploded perspective view of the cassette of the autoinjector system of FIG. 6 and its component elements.

[0037] FIG. 8A is a perspective view of the cassette and a motor/drive system of the autoinjector system of FIG. 6 in position at the beginning and at the end of a duty cycle.

[0038] FIG. 8B is a view of the components shown in FIG. 8A with the syringe in the cassette being advanced by a first motor of the motor/drive system for insertion of the syringe needle into a patient.

[0039] FIG. 8C is a view of the components shown in FIG. 8B with the plunger in the syringe being advanced by a second motor of the motor/drive system for injection of a fluid medicament from the syringe into the patient.

[0040] FIG. 9 is a perspective exploded view of yet another exemplary embodiment of the autoinjector system comprising reusable autoinjector and a corresponding disposable cassette.

[0041] FIG. 10A is a perspective top view of an exemplary embodiment of an internal frame of an autoinjector similar to the one shown in FIG. 9 with a delivery motor/drive system attached thereto.

[0042] FIG. 10B is a perspective bottom view of the internal frame shown in FIG. 10A with a injection motor/drive system attached thereto.

[0043] FIG. 10C is a perspective top view of the internal frame shown in FIG. 10A with autoinjector control components attached thereto.

[0044] FIG. 10D is a perspective bottom view of the internal frame shown in FIG. 10A with autoinjector control components attached thereto.

[0045] FIG. 11A is an exploded top view of a cassette similar to the one shown in FIG. 9.

[0046] FIG. 11B is an exploded side view of a cassette similar to the one shown in FIG. 9.

[0047] FIG. 11C is an exploded bottom view of a cassette similar to the one shown in FIG. 9.

[0048] FIG. 12 is a perspective view of the an inner sleeve and syringe of a cassette similar to the one shown in FIGS. 9 and 11A-11C.

[0049] FIG. 13 is a perspective exploded view of the inner sleeve/syringe shown in FIG. 12 and a housing of the cassette similar to the one shown in FIGS. 9 and 11A-11C.

[0050] FIG. 14 is a bottom view of the cassette shown in FIG. 9.

[0051] FIG. 15 is table showing injection rates of three different samples of an autoinjector system set at low medium and high delivery motor speed settings for solutions of three different viscosities in centipoise.

[0052] FIG. 16 is a perspective exploded view of an alternate embodiment of the cassette that omits the inner sleeve.

DETAILED DESCRIPTION

[0053] Referring to FIG. 1, an exemplary embodiment of an autoinjector system for injecting a medicament into a user/patient (a user of the system or another person or animal) is shown and is designated by reference numeral 100. The system 100 generally includes a disposable cassette 112 and a re-usable drive mechanism or autoinjector 114. The autoinjector 114 includes a cradle 116 that is dimensioned to receive and hold the cassette 112 on the autoinjector 114. The autoinjector 114 includes a first (injection) motor 118 (shown in phantom) and a section (delivery) motor 120 (also shown in phantom). The motors 118 and 120 may comprise any suitable, well known type of motor including without limitation, stepper motors and reluctance motors. The motors 118 and 120 each includes a drive system for converting the rotary motion of the motor to linear motion. Such drive systems include without limitation, lead screw/worm gear drive systems, rack and pinion drive systems, and any other linear drive or transmission system which enables the motors 118 and 120 to individually exert axially directed forces on contents of the cassette 112. These forces will need to be directed substantially along the axis 122.

Activation of the motors 118 and 120 for the generation of these forces is accomplished by manipulation of a button 124 provided with the autoinjector 114.

[0054] Referring to FIG. 2, the cassette 112 comprises a housing 126 having hollow, tubular shaped structure for holding a hypodermic syringe 128 comprising an injection needle 130 that is affixed to the distal end of a fluid chamber 132. A conventional finger grip 134 is provided at the proximal end of the fluid chamber 132. Also, a stopper or plunger 136 is disposed in the proximal end of the fluid chamber 132 to expel fluid medicament from the fluid chamber 132 through the needle 130. A protective cover 138 may be provided to cover the needle 130 when system 100 is not in operational use, and a cap 140 is employed to grip the protective cover 138.

[0055] Prior to an operation of the system 100, the cassette 112 is pre-loaded with the syringe 128, which has been pre-filled with an appropriate dose of the desired medicament (e.g., a fluid medicament). Before pre-loading the cassette 112, the protective cover 138 is positioned over the needle 130 on syringe 128. The pre-filled syringe 128 is then inserted into the housing 126 through its proximal end 142. The cap 140 can then be inserted through the distal end 144 of the housing 126 to engage the cap 140 with the protective cover 138.

[0056] The cassette 112 (pre-loaded with the pre-filled syringe 128) may be mounted on the autoinjector 114, as shown in FIG. 1, by merely inserting the cassette 112 into the cradle 116 of the autoinjector. When inserted, the opposing protrusions (only protrusion 146a is shown) formed on the housing 126 of the cassette 112 engage with respective recesses 148a and 148b to stabilize the cassette 112 on autoinjector 114.

[0057] In one exemplary embodiment, as shown in FIG. 3A, the pre-filled syringe is firmly held inside the cassette 112 with the injection needle 130 of the syringe 128 concealed inside the cassette 112 and thereby hidden from the user/patient's view (a needle concealed position or proximal position) by opposing bumps 150a and 150b formed on inner surfaces of resilient arms 152a and 152b, respectively, of the housing 126 of the cassette 112. The bumps 150a and 150b firmly hold the syringe 128 in a home position (the needle concealed position) until resilient arms 152a and 152b are flexed outwardly by an axial force exerted by the syringe 128, as the drive system of the first motor 118 pushes the syringe 128 through the housing 126 of the cassette 112 to move the injection needle 130 from the needle concealed (proximal) position into a needle extended (distal) position, as shown in FIG. 3B. In this distal position, the syringe 128 is retained in the cassette 112 by stops 153a and 153b provided on inner

surfaces of the cassette housing 126, while the injection needle 130 extends from the cassette housing 126 for insertion into a user/patient.

[0058] In one exemplary embodiment, the drive system of the first motor 118 engages the syringe 128 in a manner that allows the first motor 118 to retract the syringe 128 and thus the injection needle 130 from the extended (distal) position, thereby returning the injection needle 130 to its concealed (proximal) position with the syringe 128 firmly held in the housing 126 in the home position by the bumps 150a and 150b and the resilient arms 152a and 152b.

[0059] In an alternative embodiment, a single motor may be used in place of the first and second motors 118 and 120. The use of the single motor requires an appropriate drive or transmission which is capable of converting the rotary motion of the motor to linear motion and selectively applying the linear motion to the syringe 128 or the stopper 136.

[0060] FIG. 4 shows an alternate embodiment of the cassette 112, which includes an inner sleeve 154 and an housing 156. The inner sleeve 154 is a hollow, substantially tube-shaped structure defining a lumen 158. Formed on the outer surface of the inner sleeve 154 is a proximal projection 160 and a distal projection 162 that are axially aligned with each other. The housing 156 defines a lumen 164 and an axially aligned slot 166. Resilient arms 168a and 168b are formed on the housing 156 and are positioned to extend toward the proximal open end of the slot 166. The resilient arms 168a and 168b are respectively formed with detents 170a and 170b and ramps 172a and 172b. The resilient arms 168a and 168b and their corresponding detents 170a and 170b and ramps 172a and 172b define a latch mechanism.

[0061] The cassette of FIG. 4 is be pre-loaded with the syringe 128, according to one exemplary embodiment, by inserting the inner sleeve 154 into the lumen 164 of the housing 156 so that the proximal projection 160 on the inner sleeve 154 is positioned and held in the detents 170a and 170b of the resilient arms 168a and 168b, and then inserting the hypodermic syringe 128 into the lumen 158 of the inner sleeve 154. This places the injection needle 130 of the syringe 128 in the concealed (proximal) position within the cassette 112. Subsequently, movement of the syringe 128 through the housing 156, which moves the injection needle 130 from the needle concealed (proximal) position to the needle extended (distal) position is accomplished by the drive system of the first motor 118. In one exemplary embodiment, the drive system of the first motor 18 may include a bar (not shown) that pushes against the proximal

projection 160 of the inner sleeve 154, thereby causing the arms 168a and 168b to spread and therefore, release the proximal projection 160 from their grasp. The inner sleeve 154, with syringe 128 firmly held therein, may then be moved in a distal direction through the lumen 164 of the housing 156. This distal movement continues until the distal projection 162 contacts an end abutment 174 of the slot 166. The injection needled 130 of the syringe 128 is now in the needled extended (distal) position. Subsequently, the drive system bar of the first motor 118 may be used to apply a pulling force on the proximal projection to withdraw the inner sleeve 154 in a proximal direction through the lumen 164 of the housing 156. This proximal movement continues until the proximal projection 160 on inner sleeve 154 again engages with the detents 170a and 170b, thereby returning the syringe 128 to the home position and thus placing the injection needle 130 into the corresponding needle concealed (proximal) position.

[0062] FIG. 5 shows yet another embodiment of the cassette 112. In this embodiment, an adhesive 176 is disposed on the inner surface of the housing 126 to firmly hold the syringe 128 in the needle concealed (proximal) position. The adhesive 176, or a similar type of restraining element, can be used either directly between the syringe 128 and the housing 126 of the cassette 112, as shown in FIG. 5. The adhesive 176 selectively releases the syringe 128 and then re-adheres to the syringe 28 in response to the push and pull forces exerted on the syringe 128 by the drive system of the first motor 118.

[0063] In one exemplary method of operation of the system 100, a pre-loaded cassette 112 is positioned in the cradle 116 of the autoinjector 114, which engages the syringe 128 (FIGS. 3A-3B and FIG. 5) or the proximal projection 160 of the inner sleeve 154 of the cassette 112 (FIG. 4) with the linear drive system of the first motor 118. Prior to an injection, the cap 140 is removed from the cassette 112. Because the cap 140 is attached to the protective cover 138 covering the needle 130 of the syringe 128, the protective cover 138 is also removed. The system 100 is now ready for an injection.

[0064] With the system 100 positioned at an injection site (not shown), the button 124 on autoinjector 114 is depressed. Depression of the button 124 causes the linear drive system of the first motor 118 to apply a pushing force to the syringe 128 (FIGS. 3A-3B and FIG. 5) or the proximal projection 160 of the inner sleeve 154 of the cassette 112 (FIG. 4), to move the syringe 128 from the home position where the injection needle 130 is in the needle concealed (proximal) position to an inject position where

the injection needled 130 is in the needle extended (distal) position, thereby causing the needle 130 of syringe 128 to penetrate into tissue of the user/patient for an injection. At this time, the linear drive system of the second motor 120 pushes on the stopper 136 of the syringe 128 to expel medicament from the fluid chamber 132 of the syringe 128. After an injection has been completed, the first motor 118 is again activated to apply a pulling force to the syringe 128 (FIGS. 3A-3B and FIG. 5) or the proximal projection 160 of the inner sleeve 154 of the cassette 12 (FIG. 4), to withdraw the syringe 128 from the inject position where the injection needle 130 is in the needle extended (distal) position to the home position, where the injection needle 130 is in the needle concealed (proximal) position. The cassette 112, along with the expended syringe 128, can then be removed from the cradle 116 of the autoinjector 114 and discarded.

[0065] FIG. 6 shows another exemplary embodiment of the autoinjector system designated by reference numeral 200. As shown, the system 200 generally includes a disposable cassette 212 and a re-useable autoinjector 214. Further, as shown in phantom in FIG. 6, a motor/drive system 216 and a microcomputer or controller 218 are mounted inside the autoinjector 214. The microcomputer 218 is activated by depressing a button 220 on the autoinjector 214. When activated, the microcomputer 218 controls the operation of the motor/drive system 216 for its interaction with the cassette 212.

[0066] As shown in FIG. 7, the cassette 212 includes a housing 222, a inner sleeve 224 and a hypodermic syringe 226 including a fluid chamber 228 for holding a medicament, an injection needle 230, and a plunger 232 that is moveable within the fluid chamber 228 to expel medicament from the chamber 228 through the injection needle 230. The syringe 226 is formed with an orifice 234 that allows for contact with the plunger 232. The syringe 226 is fixedly joined with the inner sleeve 224 and this combination (i.e. syringe 226 and inner sleeve 224) is incorporated with the housing 222 to establish the cassette 212.

[0067] Still referring to FIG. 7, the inner sleeve 224 includes a projection or protrusion 236. The housing 222 is formed with a fixation member 238 that is dimensioned for engagement with the autoinjector 214 (FIG. 6). The fixation member 238 engages with the autoinjector 214 to position the cassette 212 in an operational alignment with the motor/drive system 216. The cassette 212 may be fixedly held on

the autoinjector 214 during an operation duty cycle of the system 200, and selectively removed from the autoinjector 214 after its use.

[0068] As shown in FIG. 7, the housing 222 is formed with a latch mechanism 240. The latch mechanism 240 includes a pair of opposed, resilient arms 242a and 242b that are respectively formed with detents 244a and 244b. As shown, the resilient arms 242a and 242b extend toward the proximal end of a slot 246 that extends along the side 248 of the housing 222.

[0069] When assembled, the cassette 212 forms and integral unit and is intended for use only so long as there is medicament in the fluid chamber 228 of the syringe and, it is thereafter disposable. Prior to assembly, the fluid chamber 228 of the syringe 226 will be pre-filled with a defined dose of medicament. The pre-filled syringe 226 is then inserted into the inner sleeve 224 where it is fixedly held. Movements of the inner sleeve 224 will thus result in a corresponding movement of the syringe 226. The combination (i.e. syringe 226 and inner sleeve 224) is then joined with the housing 222. When so joined, the protrusion 236 on inner sleeve 224 fits in the detents 244a and 244b between the resilient arms 242a and 242b. Accordingly, the injection needle 230 of the syringe 226 is held inside and concealed in the housing 222 of the cassette 212 in a needle concealed (proximal) position. In this configuration, the cassette 212 may be installed in or onto the autoinjector 214 substantially as shown in FIG. 6.

[0070] Referring collectively to FIGS. 8A-8C, one exemplary method of operation of the system 200 will now be described. Although the autoinjector 214 is not shown in FIGS. 8A-8C, the cassette 212 and the motor/drive system 216, shown therein, are to be considered as being operationally positioned within the autoinjector 214 as shown in FIG. 6. The motor/drive system 216 shown in FIG. 8A, includes a first (injection) motor 250 and section (delivery) motor 254. The motors 250 and 254 may comprise any suitable, well known type of motor including without limitation, stepper motors and reluctance motors. The motors 250 and 254 each includes a drive system for converting the rotary motion of the motor to linear motion. Such drive systems include without limitation, lead screw/worm gear drive systems, rack and pinion drive systems, and any other linear drive or transmission system. The drive system associated with the first motor 250 includes a drive rod 252 which is moved by the first motor 250. The drive system associated with the second motor 254 includes a

pusher 256 which is moved by the second motor 254. The operations of the first motor 250 and the second motor 254 are both controlled by the microcomputer 218.

[0071] In overview, a duty cycle for the system 200 may be envisioned as a series of sequential changes in the configuration of cassette 212. For system 200, these configuration changes are caused by separate operations of the first motor 250 and the second motor 254. In compliance with these operations, a complete duty cycle for the system 200 will constitute, in order, configurations shown from FIGS. 8A, to FIG. 8B, to FIG. 8C, and then in reverse order from FIG. 8C, back to FIG. 8B and FIG. 8A.

[0072] FIG. 8A, shows the cassette 212 with the syringe 226 in a home position, which places the injection needle 230 in the needle concealed (proximal) position. In the home position, the protrusion 236 on inner sleeve 224 is held by the latch mechanism 240 on housing 222. Consequently, the injection needle 230 of the syringe 226 is held and concealed within the cassette 212. FIG. 8B shows the cassette 212 with the syringe 226 moved into an injection position via the first motor 250, which advances the drive rod 252, wherein the injection needle 230 has been extended from the cassette 12 through a hole 258 at the distal end 260 of the autoinjector 214 (FIG. 6). With this advancement, the drive rod 252 interacts with the latch mechanism 240 to release protrusion 236, thereby allowing a distal movement of the now unlatched syringe 226 and inner sleeve 224 on the housing 222. This movement is controlled by the microcomputer 218 and is performed with sufficient force to allow the injection needle 230 to penetrate into the skin tissue of a user/patient. Preferably, this movement of the syringe 226 from the home position (FIG. 8A) to the injection position (FIG. 8B) is accomplished at a speed of about 0.1 m/s to about 1.0 m/s. Further, the first motor 250 may be pre-programmed to stabilize the syringe 226 in the injection position.

[0073] With the syringe 226 in the injection position (FIG. 8B), the microcomputer 218 then activates the second motor 254 to move the pusher 256 against the plunger 232 in the fluid chamber 228 (FIG. 7). The microcomputer 218 may be pre-programmed to advance the plunger 232 at an appropriate speed for injection of the medicament, which typically comprises a fluid medicament, from the fluid chamber 228.

[0074] FIG. 8C shows the autoinjector assembly 200 after completion of the injection. As mentioned above, completion of the injection duty cycle requires the pusher 256 to be withdrawn. This withdrawal of the pusher 256 is accomplished by

the second motor 254. Once the pusher 256 has been withdrawn (FIG. 8B), the first motor 250 is again activated by the microcomputer 218 to withdraw the drive rod 252. The drive rod 252 then pulls the protrusion 236 back and into engagement with the latch mechanism 240, thereby placing the syringe 226 in the home position and the injection needle 230 in the needle concealed (proximal) position. The cassette 212 can then be removed from the autoinjector 214 and discarded.

[0075] As an additional feature of the system 200, a sensor 262 may be provided at the distal end of the autoinjector 214. In one exemplary embodiment, the sensor 262 is positioned adjacent the hole 258 of the cassette 212. The sensor 262, in one exemplary embodiment, is of a type that will react to capacitance that can be measured between the sensor 262 and the skin of the user/patient. The sensor 262 determines when the autoinjector 214 is in physical contact with a user/patient's skin. The microcomputer 218 will operate a duty cycle for the system 200 only when such contact is indicated. Otherwise, there can be no operation of the system 200.

[0076] FIG. 9 shows yet another exemplary embodiment of the autoinjector system generally designated by reference numeral 300. The system 300 generally includes a disposable cassette 312 and a re-useable autoinjector 314. The autoinjector 314 includes a housing 315 having a cut-out 315a for receiving the cassette 312. The autoinjector housing 315 further includes a recess 315b for receiving a pair of opposing, lateral tabs 312a formed on a proximal end of the cassette 312, when the cassette 312 is positioned in the cut-out 315a of the autoinjector housing 315. The recess 315b of the autoinjector housing 315 and the lateral tabs 330a of the cassette 312 cooperate to securely retain the cassette 312 on the autoinjector 314 and to prevent longitudinal movement of the cassette 312 when the autoinjector 314 is operated. The autoinjector housing 315 also includes an injection button 320 for activating the system 300 and a plurality of indicator lights 321 (e.g., LEDs) for indicating the status of the system 300. A skin sensing sensor 374 is provided at a distal end of the autoinjector 314 for sensing when the distal end of the autoinjector 314 is in physical contact with a user/patient's skin. The autoinjector system 300 will operate only when such contact is indicated. The cassette 312 includes a cap 340 inserted through an aperture (not visible) in a distal end of the cassette 312, which is used for gripping a protective needle shield that covers an injection needle of a syringe contained within the cassette 312, as will be explained in greater detail further on.

[0077] Referring now to FIGS. 10A-10D and initially to FIG. 10A, the autoinjector 314 includes an elongated internal frame 316, which is rigidly secured within the autoinjector housing 315 (FIG. 9). The frame 316 includes a cassette support section 316a and motor/drive system and controller (MDC) support section 316b. The cassette support section 316a forms the bottom of the housing cut-out 315a and defines a mounting surface for the cassette 312 (FIG. 9). A motor/drive system 349 is rigidly mounted to MDC support section 316b of the internal frame 316. The motor/drive system 349 includes a first (injection) motor 350 (FIG. 10B) and a second (delivery) motor 354 (FIG. 10A). The first and second motors 350, 354 may comprise any suitable well-known type of motor including, without limitation, stepper motors and reluctance motors. Each of the first and second motors 350, 354 is associated with a drive system for converting the rotary motion of the motor to linear motion. Such drive systems include, without limitation, lead screw/worm gear drive systems, rack and pinion drive systems, and any other linear drive or transmission system that is capable of converting rotary motor motion into linear motion. As shown in FIG. 10B, the first motor 350 is associated with a rack and pinion drive system 352 including a rack member 352a and a pinion 353b, and as shown in FIG. 10A, the drive system associated with the second motor 354 comprises a lead screw drive system 356 comprising a gear drive 356a and lead screw 356b.

[0078] Referring again to FIG. 10B, the distal end of the rack member 352b of the rack and pinion drive system 352 forms a drive link 352c. As shown in FIG. 9, the drive link 352c has a free end 352d that extends up through a longitudinally extending, elongated opening 316b in the cassette support section 316a to operate a syringe insertion mechanism of the cassette 312. When the first motor 350 is operated, the rack and pinion drive system 352 moves the drive link 352c in a linear manner such that the free end 352d thereof moves distally and proximally in the longitudinal opening 316b of the cassette support section 316a. A first position sensor 353 is provided for sensing the position and speed of the drive link 352c, as will be explained further on.

[0079] Referring again to FIG. 10A, the lead screw 356b of the lead screw drive system 356 drives an elongated pusher 356c. The elongated pusher 356c has a free end 356d which operates a medicament delivery mechanism of the cassette 312. When the second motor 354 is operated, the lead screw drive system 356 moves the pusher 356a in a linear manner such that free end 356d thereof moves longitudinally

within the autoinjector 314 in a distal or a proximal direction. A second position sensor 355 is provided for sensing the position and speed of the pusher 356a, as will be explained further on.

[0080] Referring now to FIG. 10C, the MDC support section 316b of the internal frame 316 also supports certain control components of the autoinjector 314. These control components include a printed circuit board assembly 318 which defines a microcomputer or controller 319. The printed circuit board assembly 318 includes the injection button 320 and the indicator lights 321 described earlier, and an audible indicator in the form of a piezo-buzzer 322. The controller 319 executes one or more pre-determined programs that control the operation of the first and second motors 350 and 354. A power supply 323 for powering the first and second motors 350 and 354, and all the control components of the autoinjector 314, is also supported by the MDC support section 316b of the internal frame 316. In one exemplary embodiment, the power supply 323 comprises, without limitation, a control circuit, such as a step-up DC to DC convertor, and a battery, such as a rechargeable lithium battery.

[0081] As shown in FIG. 10D, the cassette support section 316a of the internal frame also supports certain control components of the autoinjector 314. These control components include a cassette detection switch 370, a speed selection switch 372, and the earlier described skin sensor 374. The power supply 323 also supports the power requirements of these control components. A flexible interconnect 371 is provided for connecting the cassette detection switch 370, the speed selection switch 372, and the skin sensor 374 with the printed circuit board assembly 318.

[0082] As shown in FIG. 9, the cassette detection switch 370 is actuated, in one exemplary embodiment, by an actuator button 370a that extends through an aperture in the cassette support section 316a and engages the cassette 312 when same is mounted on the cassette support section 316a. The speed selection switch 372 may be actuated by a button or like actuator 372a extending through another aperture in the cassette support section 316a. A distal end 374a of the skin sensor 374 forms a distal end of the autoinjector housing 315 so that it can make contact with a user/patient's skin.

[0083] Referring collectively to FIGS. 11A-11C, the cassette 312 includes a housing 330, an inner sleeve 331 slidably moveable in the housing 330, a hypodermic syringe 326 fixedly disposed in the inner sleeve 331, and the earlier described cap 340. The syringe 326 includes a fluid chamber 326a pre-filled with a predetermined dose of a

fluid medicament of a predetermined viscosity, an injection needle 326b (shown with broken lines) extending from a distal end of the fluid chamber 326a, a removable needle shield 326c covering the injection needle 326b, and a plunger 326d moveable within the fluid chamber 326a for expelling medicament from the chamber 326a through the injection needle 326b. The viscosity of the fluid medicament typically ranges between about 1 centipoise to about 320 centipoise, although syringes with fluid medicaments having viscosities greater than 320 centipoise may also be used by appropriate selection of the second motor 354 and/or drive system 356.

[0084] As shown in FIG. 12, the inner sleeve 331 includes a pair of locking detents 331a formed on a proximal end of the inner sleeve 331. The locking detents 331a are configured for engaging a finger flange 326e formed on the proximal end of the fluid chamber 326a of the syringe 326, to fixedly retain the syringe 326 in the inner sleeve 331.

[0085] As collectively shown in FIGS. 13 and 14, one of the locking detents 331a of the inner sleeve 331 includes a projection or protrusion 331b which engages a latch mechanism 360 formed on the cassette housing 330. The latch mechanism 360 includes a pair of opposed, resilient locking arms 360a that extend proximally from the proximal end of a longitudinally elongated slot 361 formed in a side of the housing 330. The locking arms 360a define locking detent slots 360b through which the protrusion 331b extends.

[0086] The cassette 312 is assembled, in one exemplary embodiment, by first inserting the pre-filled syringe 326 into the inner sleeve 331 so that the finger flanges 326e of the fluid chamber 326a are lockingly engaged by the locking detents 331a. The inner sleeve 331 with the pre-filled syringe 326, is then inserted into the housing 330 of the cassette 312 so that the protrusion 331b of the inner sleeve 331 spreads apart- and slides between the locking arms 360a of the housing 330 and then enters the detents slots 360b of the locking arms 360a, where it is latched. Once assembled, the syringe 326 is now in a home position with the injection needle 336b of the syringe 326 concealed in the housing 330 of the cassette 312 in a needle concealed (proximal) position. In an alternate embodiment, the cassette 312 is assembled by first inserting an empty inner sleeve 331 into the housing 330 of the cassette 312 and then inserting the pre-filled syringe 326 into the empty inner sleeve 331.

[0087] The first position sensor 353 is provided for sensing the position and speed of the drive link 352c. The position information provided by the first position sensor

353 may be used, in one exemplary embodiment, for identifying when the syringe 326 is in the home position and for determining when the syringe 326 is in a brake position, i.e., a position within the cassette just prior to the needled extended (distal) position. The syringe typically enters the brake position just after the injection needle 326b has penetrated the user/patient's skin. The brake position information allows the controller 319 to stop the first motor 350 quickly and in a manner that minimizes shock and vibration, when the inner sleeve 331/syringe 326 hit an end stop which defines the injection position. The speed information provided by the first position sensor 353 may be used for maintaining the speed of the syringe moving from the home position to the injection position.

[0088] The speed selection switch 372 has two or more settings, each of which corresponds to a different, user/patient selectable medicament injection speed (measured in seconds). This allows selection of a medicament injection speed that is most comfortable for the user/patient. In one exemplary embodiment, when the user/patient selects one of the two or more medicament injection speeds using the actuator 372a of the speed selection switch 372, the user/patient is actually setting the voltage applied to the second motor 354 to one of two or more different voltages. The actual medicament injection speed or speed of delivery, however, depends on the load force experienced by the second motor 354 (i.e., the load force applied to the plunger 326d by the pusher 356c). The load force, in turn, depends on the gauge and/or length of the injection needle, medicament viscosity, plunger/fluid chamber friction, motor and drive system tolerances, and cassette tolerances, and other system factors. When the load force experienced by the second motor 354 increases, the speed of the second motor 354 will decrease at the fixed voltage setting thereby decreasing the delivery time/rate of the autoinjector system 300. Similarly, when the load force experienced by the second motor 354 decreases, the speed of the second motor 354 will increase at the fixed voltage setting, thereby increasing the delivery time/rate of the autoinjector system 300. Therefore, in one exemplary embodiment, the controller 319 of the autoinjector 314 is pre-programmed with a feedback control program that compensates for the load force variations experienced by the second motor 354, thereby maintaining the medicament injection speed of the second motor 354. Accordingly, the autoinjector system 300 is capable of providing consistent delivery times/rates for each speed setting of the second motor 354. In one exemplary embodiment, the feedback control program executed by the controller 319 maintains

the speed setting of the second motor 354 by measuring the speed of the pusher 356a, via the position sensor 355 and then, increasing or decreasing the voltage of the second motor 354 in real-time to maintain a constant pusher speed and therefore provide a constant delivery time/rate for the selected speed setting.

[0089] The following discussion describes one exemplary method for operating the autoinjector system 300. First, the user/patient sets the actuator of 372a the speed switch 372 to desired speed setting. The speed switch 372 allows the user/patient to set the second motor 354 to one of a plurality of different medicament injection rates (in seconds) of the autoinjector system 300. FIG. 15 is a table showing injection rates (in seconds) of three different samples (CM2-1, CM2-2, CM2-3) of the autoinjector system 300 set at low, medium, and high delivery motor speed settings for solutions of three different viscosities in centipoise (cP) (1 cP, 19 cP and 29 cP). In one exemplary embodiment, the second motor 354 and drive system 356 are selected to exert up to about 34 pounds of force on the plunger 326d of the syringe 326 (which equates to about 700 psi inside of the fluid chamber 326a of the syringe 326). In other embodiments, the second motor 354 and drive system 356 may be selected to exert more than 34 pounds of force on the plunger 326d of the syringe 326.

[0090] Next, the cassette 312 is mounted onto the autoinjector 314 by placing the cassette 312 into the cut-out of the autoinjector housing 315 so that the cassette 312 rests on the cassette support member 316a with the lateral tabs 330a of the cassette housing 330 disposed in the recess 315b of the autoinjector housing 315, (FIG. 9). When so mounted, the cassette 312 depresses the actuator 372a of the cassette detection switch 372 and the protrusion 331b of the cassette inner sleeve 331 engages the free end 352d of the drive link 352c. With the cassette detection switch actuator 372a depressed, the controller 319 will cause audible indicator 322 to sound and the indicator lights 312 to blink in a manner which indicates that the system is ready for use. The user/patient then removes the cap 340 from the cassette 312, thereby removing the needle shield from the syringe 326 and withdrawing it from inside the cassette 312. Next, the user/patient places the distal end of the autoinjector 315 against the user/patient's skin. If the skin sensor senses the user/patient's skin, the controller 319 will cause the indicator lights to light steadily, indicating to the user/patient that the autoinjector system 300 is ready to inject. The user/patient starts the injection by pressing the injection button 320 which energizes the first motor 350 in a first rotary direction, which advances the drive link 352c in the distal direction

thereby unlatching the protrusion 331b of the inner sleeve 331 from the latch mechanism 360, thereby allowing a distal movement of the now unlatched inner sleeve 331 containing the syringe 326, relative to the cassette housing 330. The drive link 352c, therefore, moves the syringe 326 from the home position, where the needle 326b is in the needle concealed (proximal) position to the injection position, where the needle 326b is in a needle extended (distal) position and penetrating into the skin tissue of the user/patient. The first motor 350 and drive system 352 are both selected to provide a syringe injection speed, (the speed of the syringe moving from the home position to the injection position) of about 0.01 m/s to about 5.0 m/s, although other syringe injection speeds are possible by selection of an appropriate motor and/or drive system. In other embodiments, the syringe injection speed ranges between about 0.1 m/s to about 1.0 m/s. In some embodiments, a second speed position switch (not shown) may be provided for allowing the user/patient to select between two or more syringe injection speeds, to make the needle injection more comfortable.

[0091] With the syringe 326 now in the injection position, the controller 319 energizes the second motor 354 in a first rotary direction, which advances the pusher 356c in the distal direction against the plunger 326d in the fluid chamber 326a of the syringe 326 to inject the fluid medicament from the fluid chamber 326a of the syringe 326. In one embodiment, the controller 310 pauses the autoinjector 314 after completion of the fluid medicament injection to allow pressure to dissipate in the syringe 326 so that all the medicament is delievered and no "dribbling" of medicament occurs. Upon completion of the fluid medicament injection, the controller 319 energizes the second motor 354 in a second rotary direction, which pulls the pusher 356c in the proximal direction, thereby partially withdrawing the pusher 356c from the fluid chamber 326a of the syringe 326 to allow the injection needle to be withdrawn from the user/patient. Once the pusher 356 has been partially withdrawn, the controller 319 energizes the first motor 350 in a second rotary direction, which pulls the drive link 352c back in the proximal direction. Because the free end of the drive link 352c is coupled to the protrusion 331b of the inner sleeve 331, the drive link 352c pulls the inner sleeve 331 containing the spent syringe 326 back to the home position where the protrusion 331b is again latched by the latch mechanism 340, thereby placing the injection needle 330 in the needle concealed (proximal) position again. The controller 319 then energizes the second motor 354 again in the second rotary direction to fully withdraw the pusher 356c from the fluid

chamber 326a of the syringe 326. The cassette 312 can now be removed from the autoinjector 314 and discarded.

[0092] The autoinjectior system 300 may be suitably adapted to provide any desired medicament injection rate. In one exemplary embodiment of the autoinjector system, the medicament injection rates range between about 2.0 seconds and about 15.0 seconds.

[0093] In one exemplary embodiment of the autoinjector system, the medicament comprises a fluid medicament having a viscosity of about 1 centipoise and the medicament injection rates range between about 2.9 seconds and about 5.0 seconds.

[0094] In another exemplary embodiment of the autoinjector system, the medicament comprises a fluid medicament having a viscosity of about 19 centipoise and the medicament injection rates range between about 4.4 seconds and about 9.6 seconds.

[0095] In a further exemplary embodiment of the autoinjector system, the medicament comprises a fluid medicament having a viscosity of about 29 centipoise and the medicament injection rates range between about 7.5 seconds and about 11.8 seconds.

[0096] In one exemplary embodiment of the autoinjector system, the medicament comprises a fluid medicament having a viscosity of about 19 centipoise.

[0097] In another exemplary embodiment of the autoinjector system, the medicament comprises a fluid medicament having a viscosity ranging between about 1 centipoise and about 320 centipoise.

[0098] In still another exemplary embodiment of the autoinjector system, the medicament comprises a fluid medicament having a viscosity ranging between about 5 centipoise and about 40 centipoise.

[0099] In yet another exemplary embodiment of the autoinjector system, the medicament comprises a fluid medicament having a viscosity ranging between about 10 centipoise and about 35 centipoise.

[00100] In a further exemplary embodiment of the autoinjector system, the medicament comprises a fluid medicament having a viscosity ranging between about 15 centipoise and about 30 centipoise.

[00101] In still a further exemplary embodiment of the autoinjector system, the medicament comprises a fluid medicament having a viscosity ranging between about 20 centipoise and about 25 centipoise.

[00102] In still a further exemplary embodiment of the autoinjector system, the medicament comprises a fluid medicament having a viscosity ranging between about 16 centipoise and about 42 centipoise.

[00103] In yet a further exemplary embodiment of the autoinjector system, the medicament comprises a fluid medicament having a viscosity ranging between about 1 centipoise and about 29 centipoise.

[00104] FIG. 16 shows an alternate embodiment of the cassette designated by reference numeral 326'. The inner sleeve shown in the embodiment of FIGS. 11A-11C and 12-14 has been omitted and the fluid chamber 326a' of the syringe 326' has been provided with a projection or protrusion 326p that engages the latch mechanism 360 formed on the cassette housing 330. The free end 352d of the drive link 352c of the autoinjector 314 (FIG. 9) engages the protrusion 326p to move the syringe 326' from the home position to the injection position.

[00105] Although the autoinjector system and its elements have been described in terms of exemplary embodiments, it is not limited thereto. Rather, the appended claims should be construed broadly, to include other variants and embodiments of the autoinjector system and its elements, which may be made by those skilled in the art without departing from the scope and range of equivalents of the system and its elements.

CLAIMS

What is claimed is:

1. A system for injecting a fluid medicament into a patient which comprises:

a drive mechanism;

a hypodermic syringe with a needle, wherein the syringe is pre-filled with the fluid medicament and the syringe includes a stopper for expelling the medicament from the syringe through the needle; and

a cassette for receiving and holding the hypodermic syringe, wherein the syringe is engaged with the drive mechanism for movement of the syringe on the cassette, between a first position and a second position, when the cassette is mounted on the drive mechanism.

2. A system as recited in claim 1 wherein the first position is a proximal position for hiding the syringe needle inside the cassette, and the second position is a distal position where the needle extends from the cassette for injection of the medicament.

3. A system as recited in claim 2 wherein the drive mechanism comprises:

a first motor for engagement with the hypodermic syringe to move the syringe between the proximal and the distal positions; and

a second motor for pushing the stopper to expel the medicament from the syringe while the syringe is in the distal position.

4. A system as recited in claim 3 wherein the cassette comprises:

an inner sleeve for holding the syringe; and

a housing for supporting the inner sleeve during movement of the inner sleeve thereon between the proximal position and the distal position, with the inner sleeve being selectively engaged with the housing to firmly hold the inner sleeve in the proximal position, and engageable with the drive mechanism for release of the inner sleeve from the housing and subsequent movement of the syringe with the inner sleeve between the proximal position and the distal position.

5. A system as recited in claim 4 wherein the housing is a hollow tube having a wall defining an axis, and having a first end and a second end, with the wall of the tube having a longitudinal slot extending between the first and second ends of the tube, and wherein the cassette further comprises:

a resilient arm formed on the wall of the housing with a detent formed on the arm, the arm being biased to extend the detent into the slot of the housing; and

a projection extending radially outward from the inner sleeve and into the slot of the housing for selective engagement with the detent of the housing.

6. A system as recited in claim 5 further comprising a pair of resilient arms, wherein the arms are opposite each other across the slot for concerted engagement with the projection on the inner sleeve.

7. A system as recited in claim 4 further comprising:

a protective cover positioned over the needle of the syringe; and

a cap engageable with the protective cover for subsequent removal of the protective cover with the cap when the cap is removed from the housing.

8. A system as recited in claim 3 further comprising an adhesive means mounted on the cassette to hold the hypodermic syringe in the proximal position for selective release therefrom, and re-engagement therewith, in response to action of the drive mechanism.

9. A system as recited in claim 3 further comprising a resilient bump formed on the cassette to hold the syringe in the proximal position, and to release the syringe therefrom in response to action of the drive mechanism.

10. A system for expelling a fluid medicament from a pre-filled hypodermic syringe, wherein the syringe has a needle and a stopper for expelling the medicament from the syringe through the needle, the system comprising:

a means for holding the syringe in a first position on the holding means to hide the needle;

a means for moving the syringe on the holding means between the first position and a second position wherein the needle extends from the holding means for injection of the medicament; and

a means for pushing the stopper to expel the medicament from the syringe while the syringe is in the second position.

11. A system as recited in claim 10 wherein the moving means, in combination with the pushing means, comprises a drive mechanism.

12. A system as recited in claim 11 wherein the holding means is a cassette, and the cassette is selectively engaged with the drive mechanism.

13. A system as recited in claim 12 wherein the cassette comprises:

an inner sleeve for holding the syringe; and

a housing for supporting the inner sleeve during movement of the inner sleeve thereon between the first position and the second position, with the inner sleeve being selectively engaged with the housing to firmly hold the inner sleeve in the first position, and engageable with the drive mechanism for release of the inner sleeve from the housing and subsequent movement of the syringe with the inner sleeve between the first position and the second position.

14. A system as recited in claim 13 wherein the housing is a hollow tube having a wall defining an axis, and having a first end and a second end, with the wall of the tube having a longitudinal slot extending between the first and second ends of the tube, and wherein the cassette further comprises:

a resilient arm formed on the wall of the housing with a detent formed on the arm, the arm being biased to extend the detent into the slot of the housing; and

a projection extending radially outward from the inner sleeve and into the slot of the housing for selective engagement with the detent of the housing.

15. A system as recited in claim 12 further comprising an adhesive means mounted on the cassette to hold the hypodermic syringe in the first position for selective release therefrom, and re-engagement therewith, in response to action of the drive mechanism.

16. A system as recited in claim 12 further comprising a resilient bump formed on the cassette to hold the syringe in the proximal position, and to release the syringe therefrom in response to action of the drive mechanism.

17. A drive mechanism for expelling a fluid medicament from a hypodermic syringe, wherein the syringe has a needle and a stopper for expelling the medicament from the syringe through the needle, and wherein the syringe is engaged with a cassette to conceal the needle of the syringe; the drive mechanism comprising:

a housing for engagement with the cassette while the needle of the syringe is in a concealed position inside the cassette;

a first motor mounted on the housing for moving the syringe and its needle on the cassette from its concealed position to an extended position where the needle is exposed; and

a second motor mounted on the housing for pushing the stopper to expel the medicament from the syringe while the syringe needle is in its extended position.

18. A drive mechanism as recited in claim 17 wherein the cassette comprises:

an inner sleeve for holding the syringe; and

a housing for supporting the inner sleeve during movement of the inner sleeve thereon between the concealed position and the extended position, with the inner sleeve being selectively engaged with the housing to firmly hold the inner sleeve in the concealed position, and engageable with the first motor for release of the inner sleeve from the housing and subsequent movement of the syringe with the inner sleeve between the concealed position and the extended position.

19. A drive mechanism as recited in claim 17 further comprising an adhesive means mounted on the cassette to hold the hypodermic syringe in the concealed position for selective release therefrom, and re-engagement therewith, in response to action of the first motor.

20. A drive mechanism as recited in claim 17 further comprising a resilient bump formed on the cassette to hold the syringe in the concealed position, and to release the syringe therefrom in response to action of the first motor.

21. A system for injecting a fluid medicament into a patient which comprises:

a cassette having a latch mechanism;

a hypodermic syringe engageable with the latch mechanism for holding the syringe on the cassette;

an injector having a means for selectively holding the cassette on the injector;

a first motor mounted on the injector, the first motor being engageable with the cassette for selectively latching and unlatching the syringe from the cassette, and engageable with the syringe for moving the unlatched syringe on the cassette between a first position and a second position;

a second motor mounted on the injector, the second motor being engageable with the syringe for expelling the fluid medicament from the syringe; and

a computer mounted on the injector for coordinated control of the first and second motors.

22. A system as recited in claim 21 wherein the hypodermic syringe comprises:

a syringe chamber for holding the fluid medicament therein;

an injection needle extending from the syringe chamber; and

a plunger slidably mounted for advancement into the syringe chamber to expel fluid medicament therefrom through the injection needle.

23. A system as recited in claim 22 wherein the first position is characterized by the injection needle being withdrawn and concealed within the cassette, and the

second position is characterized by having the injection needle extend from the cassette and from the injector for expelling the fluid medicament from the syringe.

24. A system as recited in claim 23 wherein the latched syringe is fixedly held in the first position on the cassette.

25. A system as recited in claim 24 wherein a duty cycle requires, in sequence: computer control of the first motor for movement of the unlatched syringe at a predetermined speed from the first position to the second position; computer control of the second motor for advancement of the plunger into the syringe chamber at a predetermined rate for expelling fluid medicament from the syringe; and computer control of the first motor for withdrawal of the syringe from the second position to the first position and for activation of the latch to fixedly hold the syringe in the first position on the cassette.

26. A system as recited in claim 25 wherein the predetermined speed for advancement of the syringe from the first position to the second position is approximately 0.1 to 1 m/s.

27. A system as recited in claim 23 wherein the cassette is formed with an orifice to allow for extension of the injection needle from the cassette, and the system further comprises a skin sensor mounted on the injector adjacent the orifice to generate a contact signal whenever the orifice is positioned against the skin of the patient.

28. A system as recited in claim 21 wherein the cassette further comprises:

a cassette body engageable with the holding means on the injector; and

a sleeve slidingly mounted on the cassette body for movement between the first position and the second position, wherein the syringe is fixedly held on the sleeve for movement therewith, and wherein the latch mechanism includes a first part formed on the cassette body and a second part formed on the sleeve.

29. A system for injecting a fluid medicament into a patient which comprises:

a hypodermic syringe having a syringe chamber for holding the fluid medicament therein, an injection needle extending from the syringe chamber, and a plunger slidably mounted for advancement into the syringe chamber to expel fluid medicament therefrom through the injection needle;

a support means for holding the syringe, with the syringe being selectively moveable on the support means between a first position wherein the injection needle is withdrawn and concealed within the support means and a second position wherein

the injection needle extends from the support means for expelling the fluid medicament from the syringe; and

a drive means engaged with the support means, the drive means being bifurcated to have a first motor for moving the hypodermic syringe on the support means and a second motor for advancing the plunger into the syringe chamber to expel the fluid medicament when the syringe is in the second position.

30. A system as recited in claim 29 wherein the support means comprises:

a cassette; and

a latch mechanism formed on the cassette for holding the syringe in the first position.

31. A system as recited in claim 30 wherein the cassette comprises:

a cassette body engageable with the holding means on the injector; and

a sleeve slidingly mounted on the cassette body for movement between the first position and the second position,

wherein the syringe is fixedly held on the sleeve for movement therewith, and wherein the latch mechanism includes a first part formed on the cassette body and a second part formed on the sleeve.

32. A system as recited in claim 30 wherein the first motor is engageable with the cassette for selectively latching and unlatching the syringe from the cassette.

33. A system as recited in claim 30 further comprising a computer mounted on the drive means for coordinated control of the first motor and the second motor.

34. A system as recited in claim 33 wherein a duty cycle requires, in sequence: computer control of the first motor for movement of the unlatched syringe at a predetermined speed from the first position to the second position; computer control of the second motor for advancement of the plunger into the syringe chamber with a predetermined force at a predetermined rate for expelling fluid medicament from the syringe; and computer control of the first motor for withdrawal of the syringe from the first position to the second position and for activation of the latch to fixedly hold the syringe in the first position on the cassette.

35. A system as recited in claim 34 wherein the predetermined speed for advancement of the syringe from the first position to the second position is approximately 0.1 to 1 m/s.

36. A method for injecting a fluid medicament from a syringe into a patient comprises the steps of:

engaging a hypodermic syringe with a cassette, wherein the cassette has a latch mechanism for holding the syringe on the cassette and the syringe includes a syringe chamber for holding the fluid medicament therein, an injection needle extending from the syringe chamber, and a plunger slidably mounted for advancement into the syringe chamber to expel fluid medicament therefrom through the injection needle;

holding the cassette on an injector, wherein the injector has a first motor engageable with the cassette for selectively latching and unlatching the syringe from the cassette, and engageable with the syringe for moving the unlatched syringe on the cassette between a first position wherein the injection needle is withdrawn and concealed with the cassette and a second position wherein the injection needle extends from the cassette, and a second motor engageable with the syringe for expelling the fluid medicament from the syringe when the syringe is in the second position, and a computer mounted for coordinating control of the first and second motors; and activating the injector to perform a duty cycle for an injection of medicament from the syringe.

37. A method as recited in claim 36 wherein a duty cycle comprises, in sequence, the steps of:

control of the first motor for movement of the unlatched syringe at a predetermined speed from the first position to the second position;

control of the second motor for advancement of the plunger into the syringe chamber with a predetermined force at a predetermined rate for expelling fluid medicament from the syringe; and

control of the first motor for withdrawal of the syringe from the first position to the second position and for activation of the latch to fixedly hold the syringe in the first position on the cassette.

38. A method as recited in claim 37 wherein the predetermined speed for advancement of the syringe from the first position to the second position is approximately 0.1 to 1 m/s.

39. A method as recited in claim 36 further comprising the step of monitoring the activating step wherein the cassette is formed with an orifice to allow for extension of the injection needle from the cassette, and a skin sensor mounted on the injector adjacent the orifice to generate a contact signal for determining when the orifice is positioned against the skin of the patient.

40. A method as recited in claim 36 wherein the cassette comprises a cassette body engageable with the holding means on the injector, and a sleeve slidingly mounted on the cassette body for movement between the first position and the second position, wherein the syringe is fixedly held on the sleeve for movement therewith, and wherein the latch mechanism includes a first part formed on the cassette body and a second part formed on the sleeve.

41. A system for injecting a medicament into a patient, the system comprising:

an injector; and

a medicament cassette;

the medicament cassette comprising:

a housing;

a sleeve movable in the housing between first and second positions; and

a syringe comprising a chamber for containing a medicament and an injection needle extending from the syringe chamber, the syringe chamber at least partially disposed in the sleeve, the injection needle having a skin penetrating end opposite the syringe chamber, the skin penetrating end disposed within the housing when the sleeve is in the first position and the skin penetrating end extending out from the housing when the sleeve is in the second position;

the injector comprising:

a surface for removably mounting the cassette thereon;

a motor driven link having a first end engageable with a portion of the sleeve when the cassette is mounted on the surface, the link for moving the sleeve from the first position to the second position.

42. The system according to claim 41, wherein the injector further comprises a motor driven plunge rod for expelling the medicament contained in the syringe chamber through the injection needle and out the injection end thereof at a specified delivery rate.

43. The system according to claim 42, further comprising a motor for driving the plunge rod, the motor being speed adjustable to allow a user to select the delivery rate of the medicament expelled out through the injection end of the injection needle.

44. The system according to claim 43, further comprising a controller for automatically maintaining the selected delivery rate of medicament.

45. The system of claim 41, wherein the portion of the sleeve comprises a projection extending from a surface of the sleeve.

46. The system of claim 45, wherein the housing includes a latch that releasably engages the projection when the sleeve is in the first position.

47. The system of claim 46, wherein the latch includes at least one resilient arm with a detent slot.

48. The system of claim 41, wherein the housing includes a latch that releasably engages the portion of the sleeve, when the sleeve is in the first position.

49. The system of claim 48, wherein the latch includes at least one resilient arm with a detent slot.

50. A system for injecting a medicament, the system comprising:

an injector; and

a medicament cassette comprising a syringe for containing a medicament; the injector comprising:

a plunge rod for expelling the fluid medicament from the syringe;

a motor for driving the plunge rod; and

a switch operatively coupled to the motor, for allowing a user to select one of a plurality of different medicament injection rates of the system.

51. The system according to claim 50, further comprising a controller for automatically maintaining the selected delivery rate of the system.

52. The system according to claim 50, wherein the plurality of different injection rates range between about 2.0 seconds and about 15.0 seconds.

53. The system according to claim 50, wherein the medicament comprises a fluid medicament having a viscosity of about 1 centipoise and wherein the plurality of different injection rates range between about 2.9 seconds and about 5.0 seconds.

54. The system according to claim 50, wherein the medicament comprises a fluid medicament having a viscosity of about 19 centipoise and wherein the plurality of different injection rates range between about 4.4 seconds and about 9.6 seconds.

55. The system according to claim 50, wherein the medicament comprises a fluid medicament having a viscosity of about 29 centipoise and wherein the plurality of different injection rates range between about 7.5 seconds and about 11.8 seconds.

56. The system according to claim 50, wherein the medicament comprises a fluid medicament having a viscosity of about 19 centipoise.

57. The system according to claim 50, wherein the medicament comprises a fluid medicament having a viscosity ranging between about 1 centipoise and about 320 centipoise.

58. The system according to claim 50, wherein the medicament comprises a fluid medicament having a viscosity ranging between about 5 centipoise and about 40 centipoise.

59. The system according to claim 50, wherein the medicament comprises a fluid medicament having a viscosity ranging between about 10 centipoise and about 35 centipoise.

60. The system according to claim 50, wherein the medicament comprises a fluid medicament having a viscosity ranging between about 15 centipoise and about 30 centipoise.

61. The system according to claim 50, wherein the medicament comprises a fluid medicament having a viscosity ranging between about 20 centipoise and about 25 centipoise.

62. The system according to claim 50, wherein the medicament comprises a fluid medicament having a viscosity ranging between about 16 centipoise and about 42 centipoise.

63. The system according to claim 50, wherein the medicament comprises a fluid medicament having a viscosity ranging between about 1 centipoise and about 29 centipoise.

64. A medicament cassette for an autoinjector, the medicament cassette comprising:

a housing;

a sleeve movable in the housing between first and second positions; and

a syringe comprising a chamber for containing a medicament and an injection needle extending from the syringe chamber, the syringe chamber at least partially disposed in the sleeve, the injection needle having a skin penetrating end opposite the syringe chamber, the skin penetrating end disposed within the housing when the sleeve is in the first position and the skin penetrating end extending out from the housing when the sleeve is in the second position,

wherein a portion of the sleeve engages a drive link of the autoinjector, when the cassette is mounted on or in the autoinjector.

65. The medicament cassette of claim 64, wherein the portion of the sleeve comprises a projection extending from a surface of the sleeve.

66. The medicament cassette of claim 65, wherein the housing includes a latch that releasably engages the projection when the sleeve is in the first position.

67. The medicament cassette of claim 66, wherein the latch includes at least one resilient locking arm with a detent slot.

68. The medicament cassette of claim 64, wherein the housing includes a latch that releasably engages the portion of the sleeve, when the sleeve is in the first position.

69. The medicament cassette of claim 68, wherein the latch includes at least one resilient locking arm with a detent slot.

70. An injector for injecting a medicament into a patient, the injector comprising:

a surface for removably mounting a cassette thereon, the cassette having disposed therein a sleeve holding a syringe containing the medicament; and

a motor driven link having a first end engageable with a portion of the cassette when the cassette is mounted on the surface, the link for moving the sleeve from the first position to the second position.

71. The injector according to claim 70, further comprising a motor driven plunge rod for expelling the medicament contained in the syringe at a specified medicament delivery rate.

72. The injector according to claim 71, further comprising a motor for driving the plunge rod, the motor being speed adjustable to allow a user to select the medicament delivery rate.

73. The injector according to claim 72, further comprising a controller for automatically maintaining the selected medicament delivery rate.

74. The injector according to claim 71, further comprising a second motor for driving the link.

75. The injector according to claim 70, further comprising a motor for driving the link.

76. The cassette according to claim 64, wherein the medicament comprises a fluid medicament having a viscosity of about 19 centipoise.

77. The cassette according to claim 64, wherein the medicament comprises a fluid medicament having a viscosity ranging between about 1 centipoise and about 320 centipoise.

78. The cassette according to claim 64, wherein the medicament comprises a fluid medicament having a viscosity ranging between about 5 centipoise and about 40 centipoise.

79. The cassette according to claim 64, wherein the medicament comprises a fluid medicament having a viscosity ranging between about 10 centipoise and about 35 centipoise.

80. The cassette according to claim 64, wherein the medicament comprises a fluid medicament having a viscosity ranging between about 15 centipoise and about 30 centipoise.

81. The cassette according to claim 64, wherein the medicament comprises a fluid medicament having a viscosity ranging between about 20 centipoise and about 25 centipoise.

82. The cassette according to claim 64, wherein the medicament comprises a fluid medicament having a viscosity ranging between about 16 centipoise and about 42 centipoise.

83. The cassette according to claim 64, wherein the medicament comprises a fluid medicament having a viscosity ranging between about 1 centipoise and about 29 centipoise.

84. A system for injecting a medicament into a patient, the system comprising:

an injector; and

a medicament cassette;

the medicament cassette comprising:

a housing; and

a syringe comprising a chamber for containing a medicament and an injection needle extending from the syringe chamber, the injection needle having a skin penetrating end opposite the syringe chamber, the skin penetrating end disposed within the housing when the syringe is in a first position and the skin penetrating end extending out from the housing when the syringe is in a second position;

the injector comprising:

a surface for removably mounting the cassette thereon;

a motor driven link having a first end engageable with a portion of the syringe when the cassette is mounted on the surface, the link for moving the syringe from the first position to the second position.

85. The system of claim 84, wherein the portion of the syringe comprises a projection extending from a surface of the syringe chamber.

86. The system of claim 41, wherein the sleeve includes a locking detent for fixedly retaining the syringe in the sleeve.

87. The system of claim 86, wherein the portion of the syringe comprises a projection extending from a surface of the locking detent.

88. The cassette of claim 64, wherein the sleeve includes a locking detent for fixedly retaining the syringe in the sleeve.

89. The cassette of claim 88, wherein the portion of the syringe comprises a projection extending from a surface of the locking detent.

90. A medicament cassette for an autoinjector, the medicament cassette comprising:

a housing; and

a syringe comprising a chamber for containing a medicament and an injection needle extending from the syringe chamber, the injection needle having a skin penetrating end opposite the syringe chamber, the skin penetrating end disposed within the housing when the syringe is in a first position and the skin penetrating end extending out from the housing when the syringe is in a second position,

wherein a portion of the syringe engages a drive link of the autoinjector, when the cassette is mounted on or in the autoinjector.

91. The cassette of claim 90, wherein the portion of the syringe comprises a projection extending from a surface of the syringe chamber.

92. A system for injecting a medicament into a patient, the system comprising:

an injector; and

a medicament cassette;

the injector comprising:

a surface for removably mounting the cassette thereon; and

a motor driven link having a first end for operating the cassette in a needle injection mode.

93. A system for injecting a medicament, the system comprising:

an injector; and

a medicament cassette;

the injector comprising:

a plunge rod for expelling a fluid medicament from a syringe;

a motor for driving the plunge rod; and

a switch operatively coupled to the motor, for allowing a user to select one of a plurality of different medicament injection rates of the system.

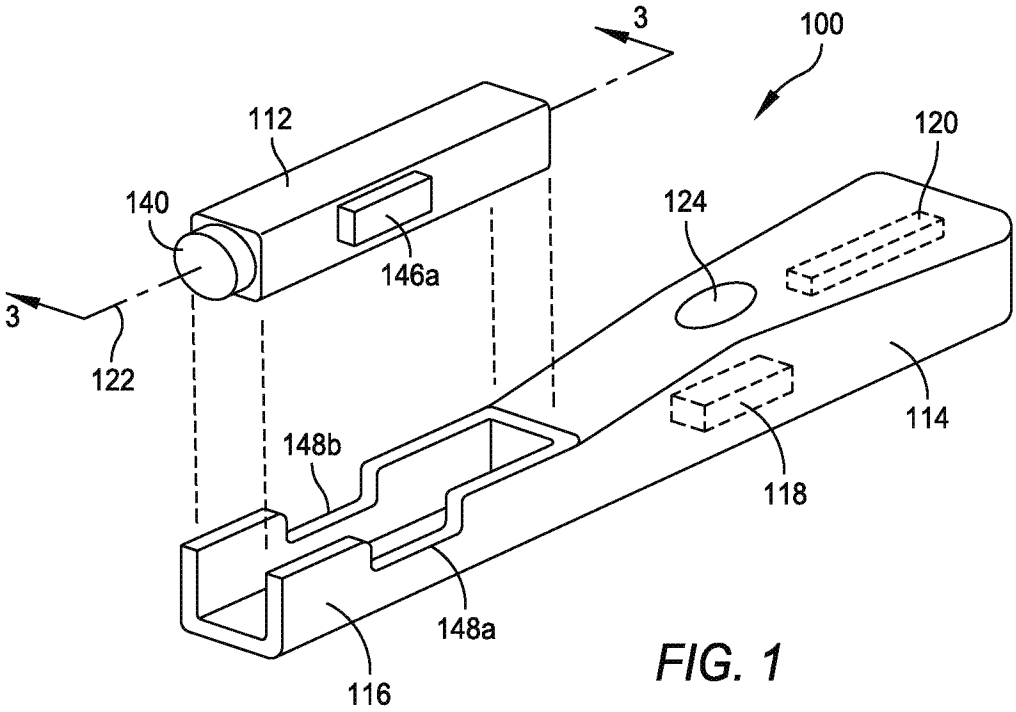
3
100
112
120
140
124
146a
3
122
114
148b
118
148a
116

FIG. 1

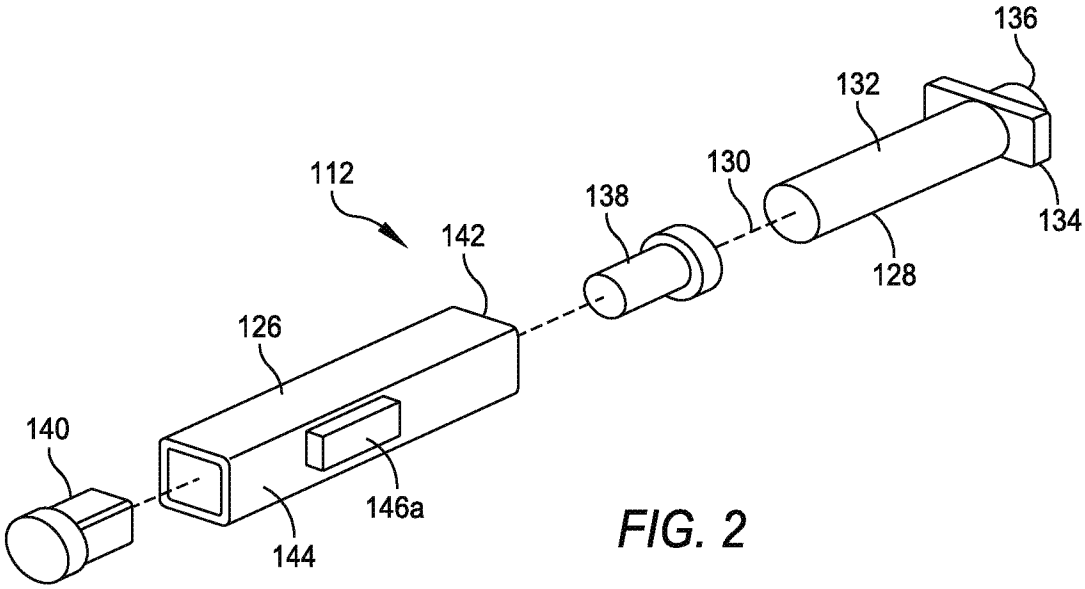
136
132
112
130
138
134
142
128
126
140
146a
144

FIG. 2

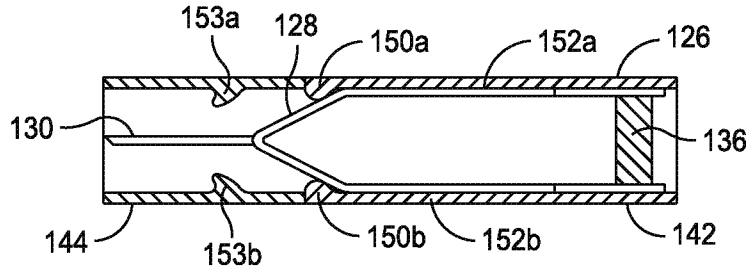

FIG. 3A

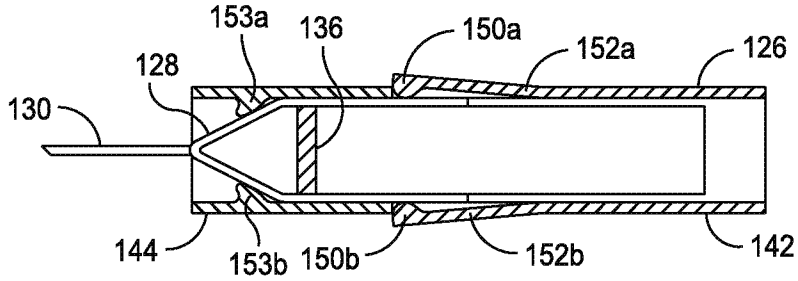

FIG. 3B

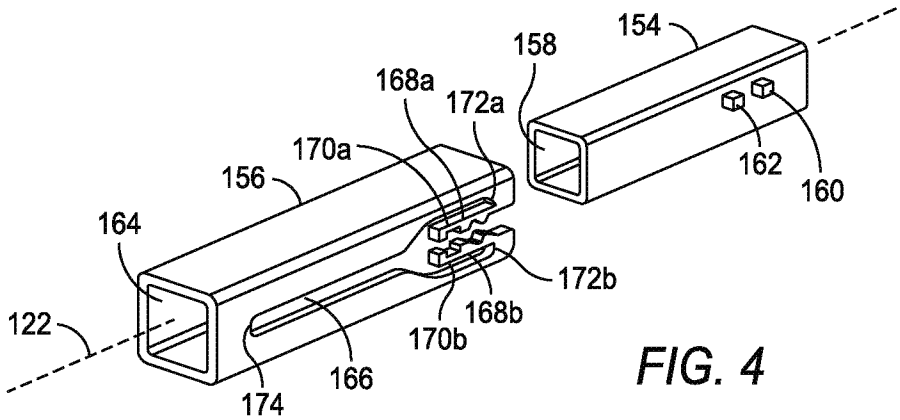

FIG. 4

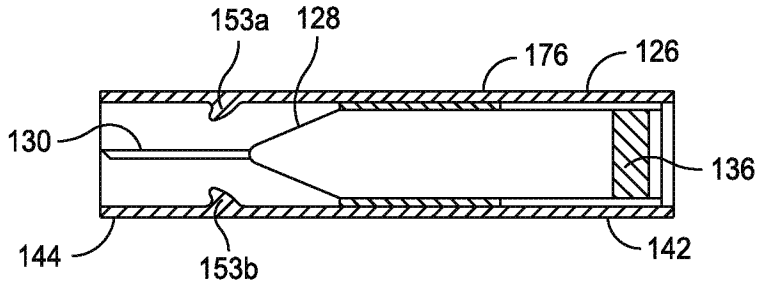

FIG. 5

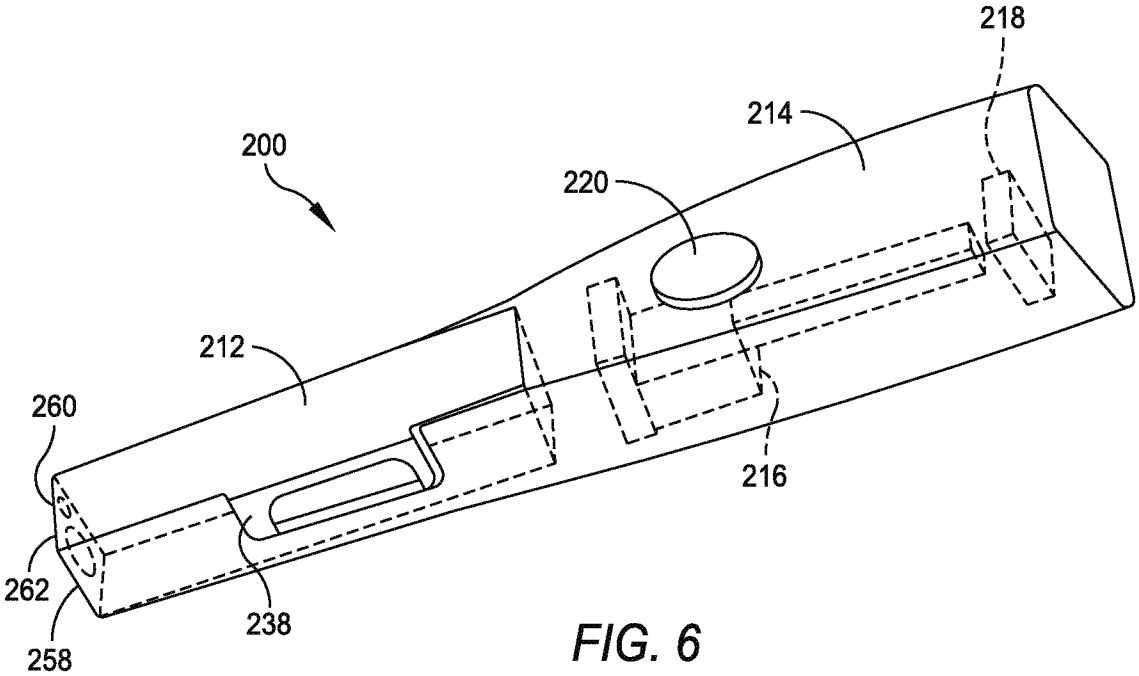
218
214
200
220
212
260
216
262
238
258

FIG. 6

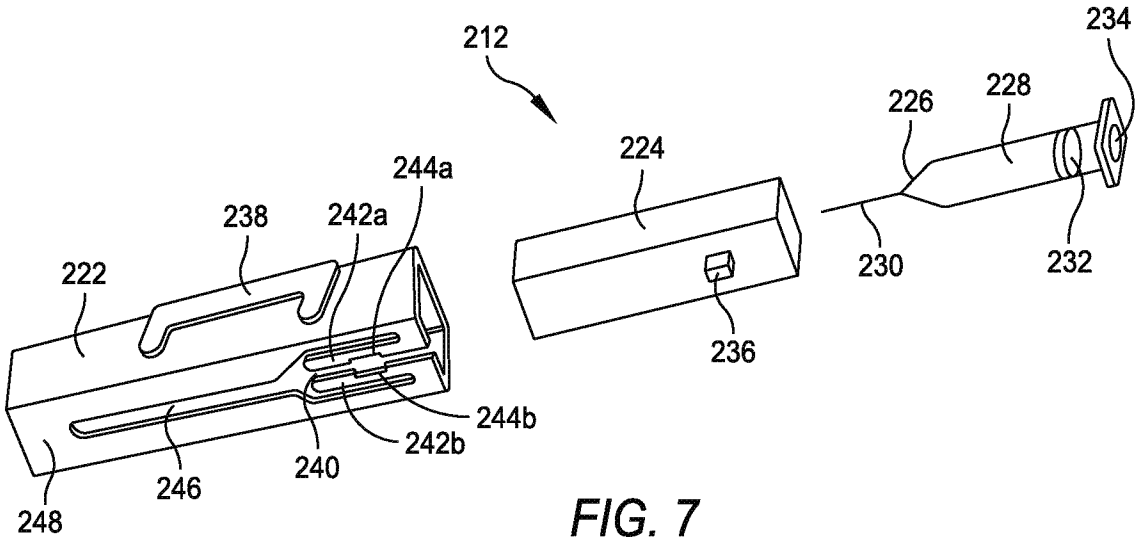
212
234
226
228
224
244a
238
242a
222
230
232
236
244b
242b
240
246
248

FIG. 7

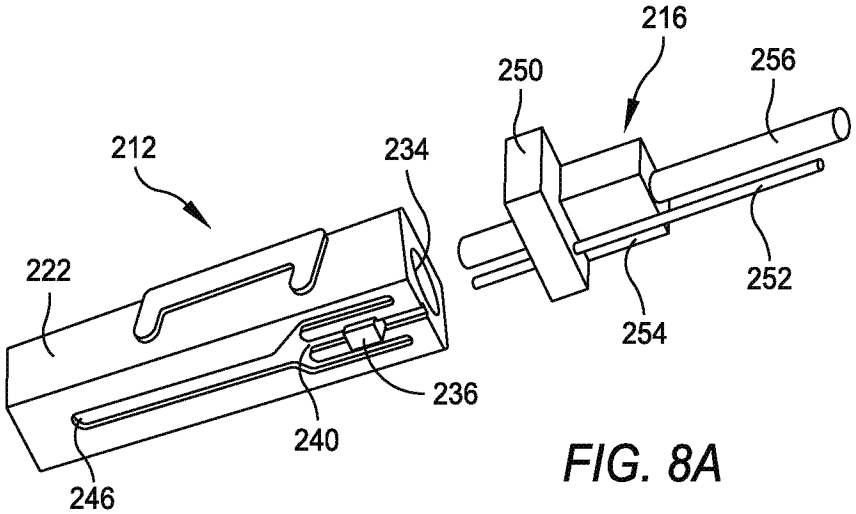

FIG. 8A

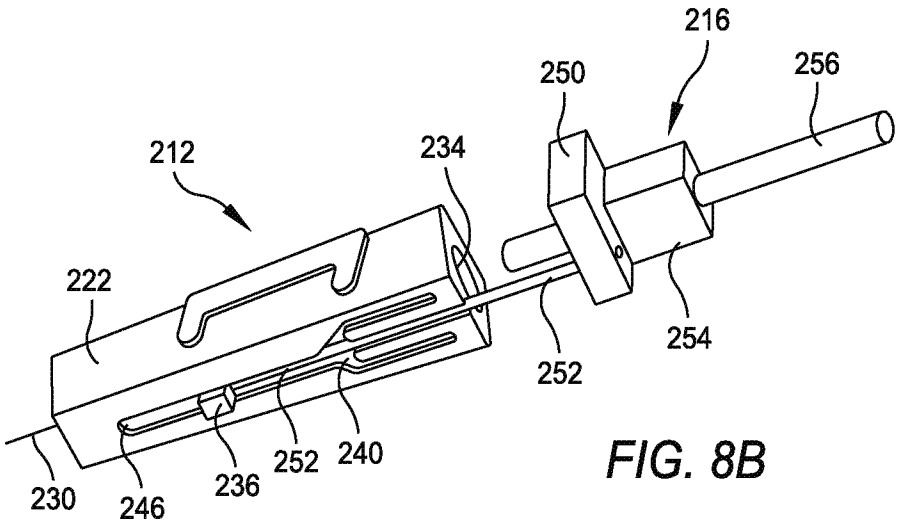

FIG. 8B

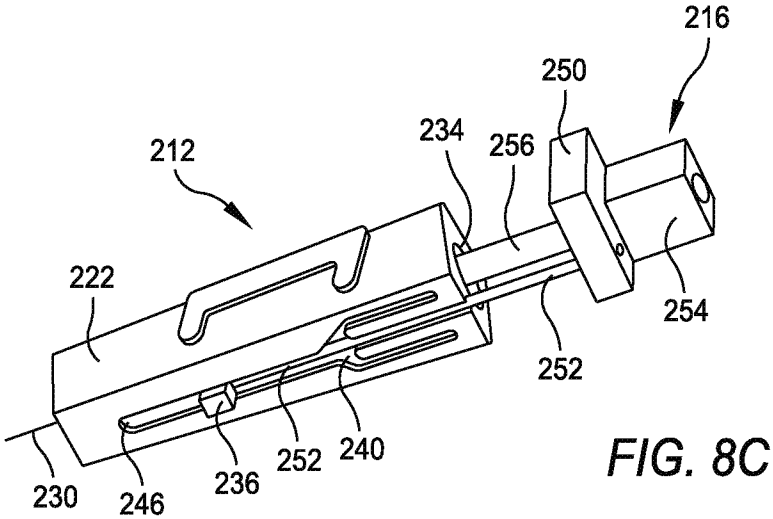

FIG. 8C

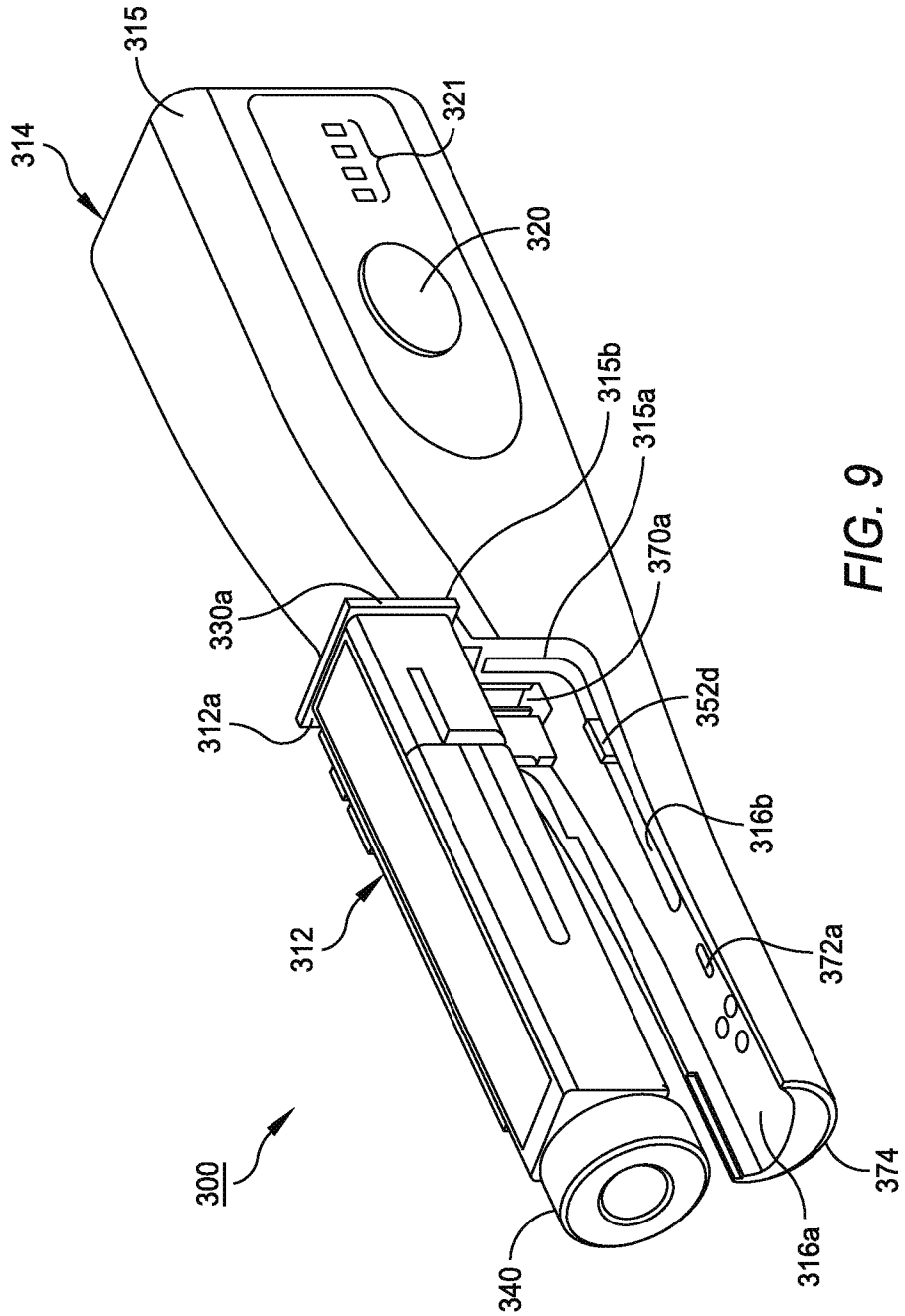
300
312
312a
330a
314
315
315a
315b
320
321
340
352d
370a
316a
316b
372a
374

FIG. 9

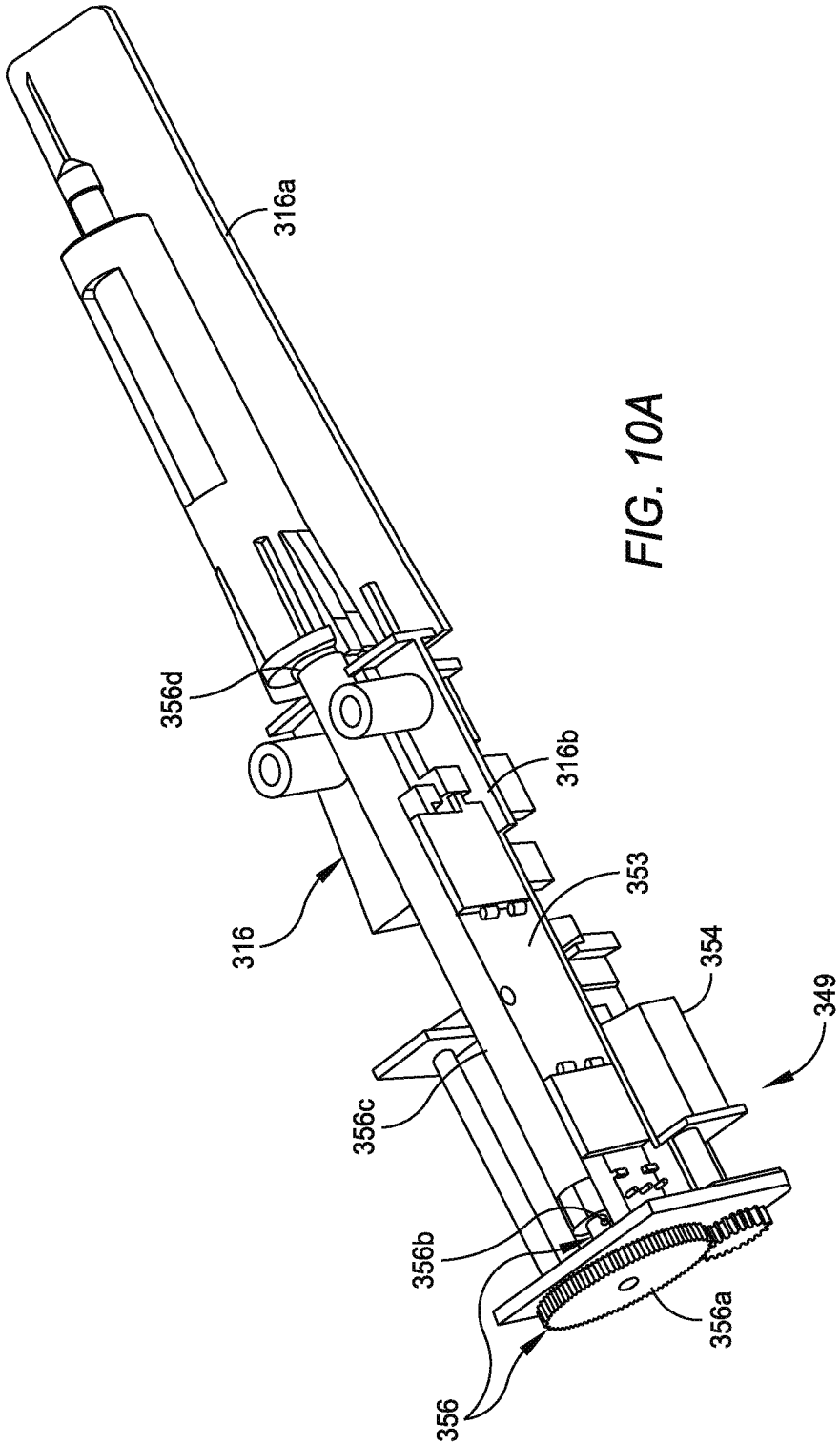

FIG. 10A

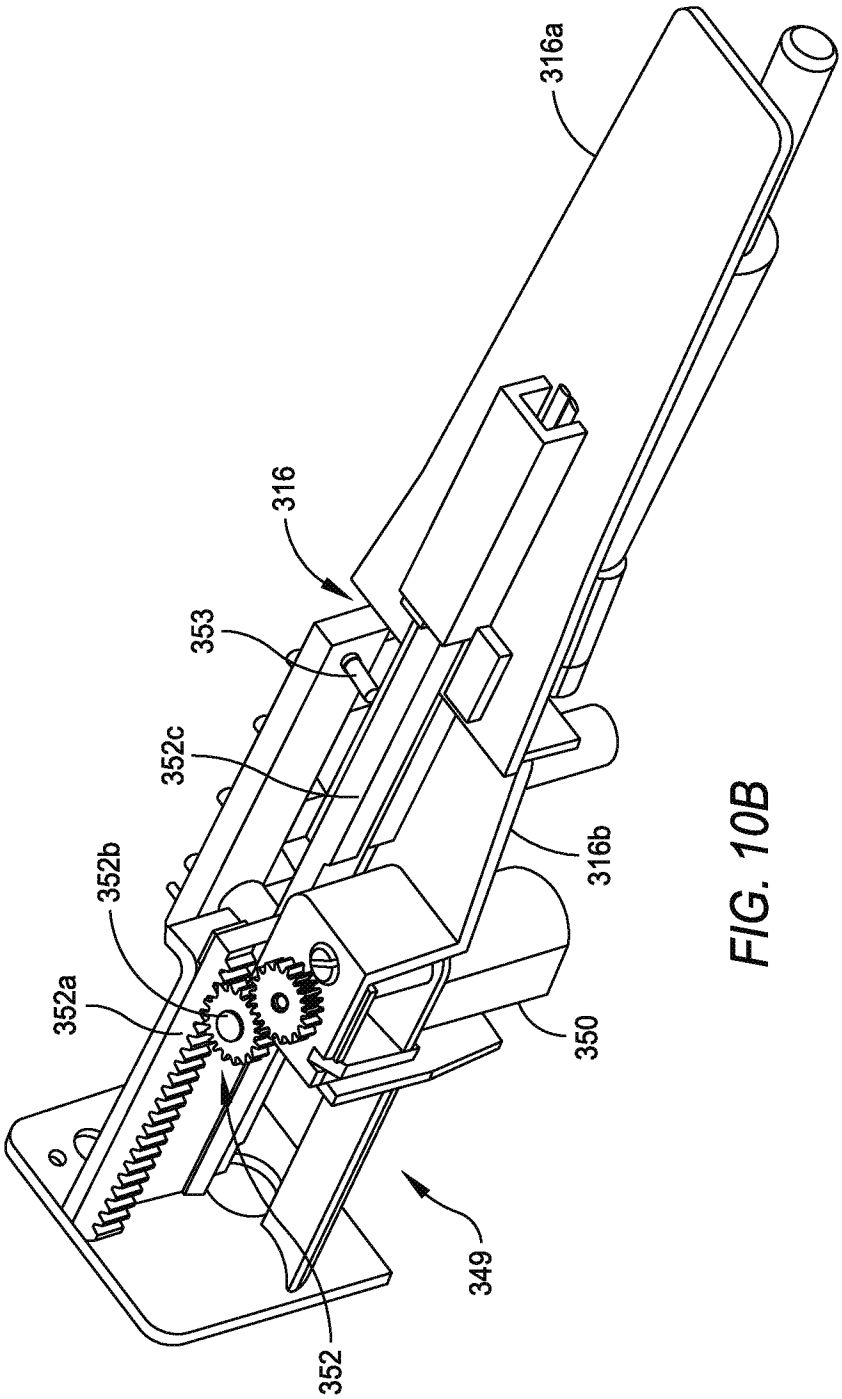

FIG. 10B

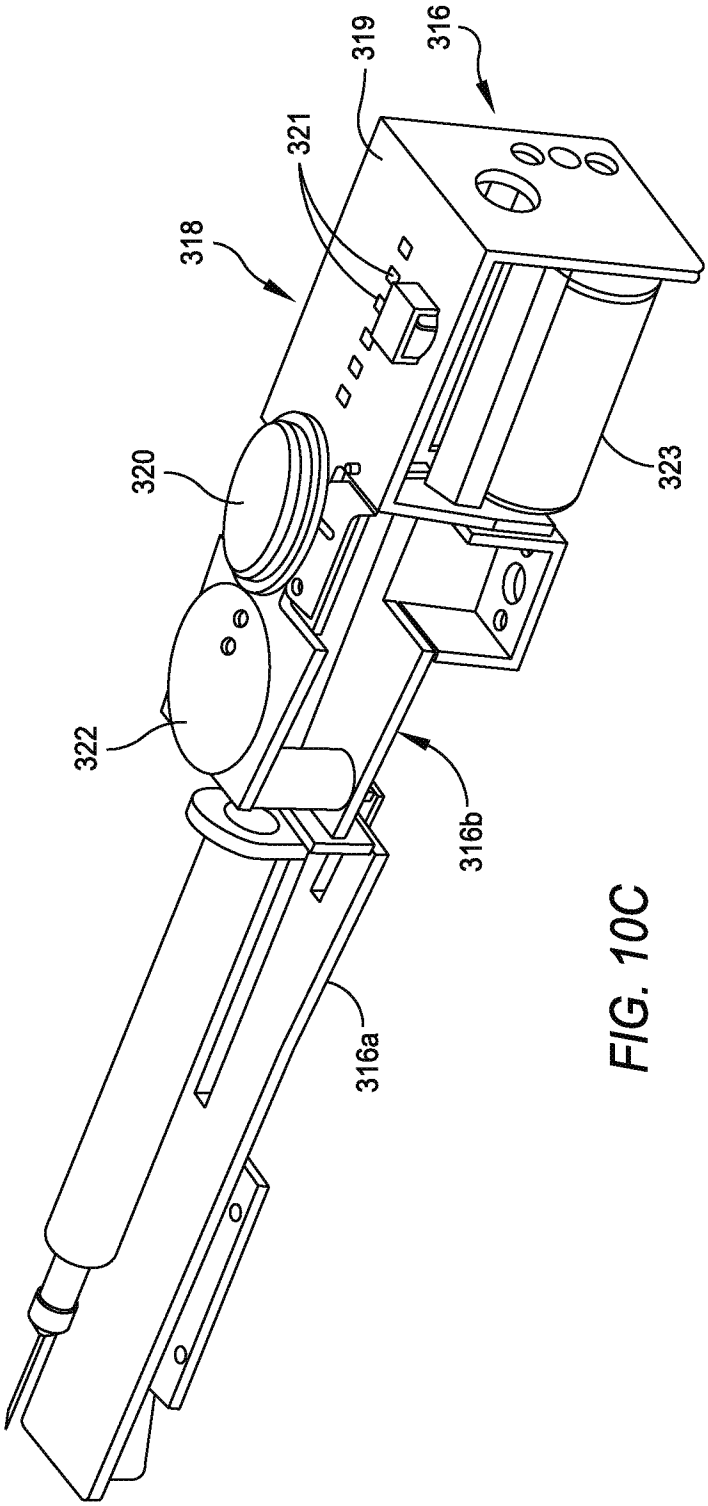

FIG. 10C

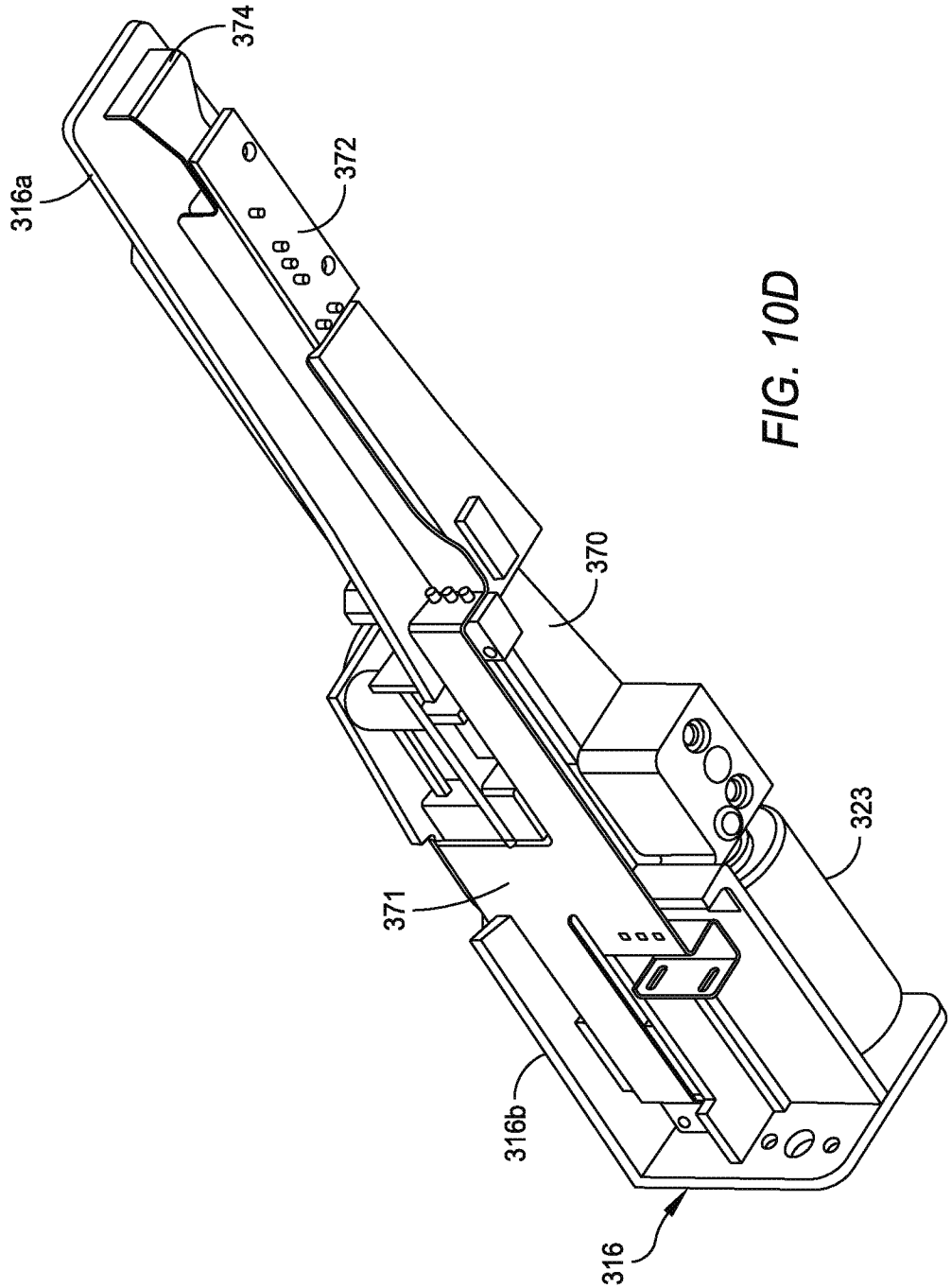

FIG. 10D

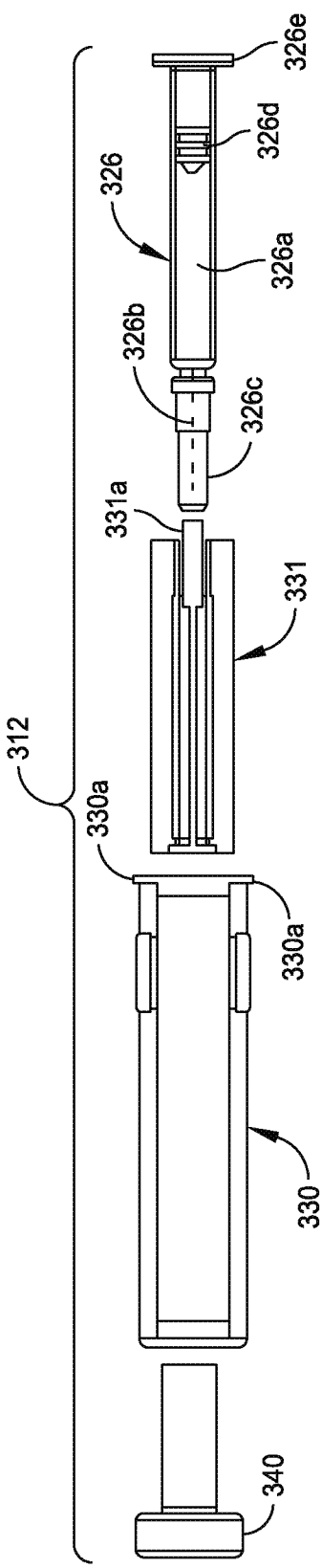

FIG. 11A

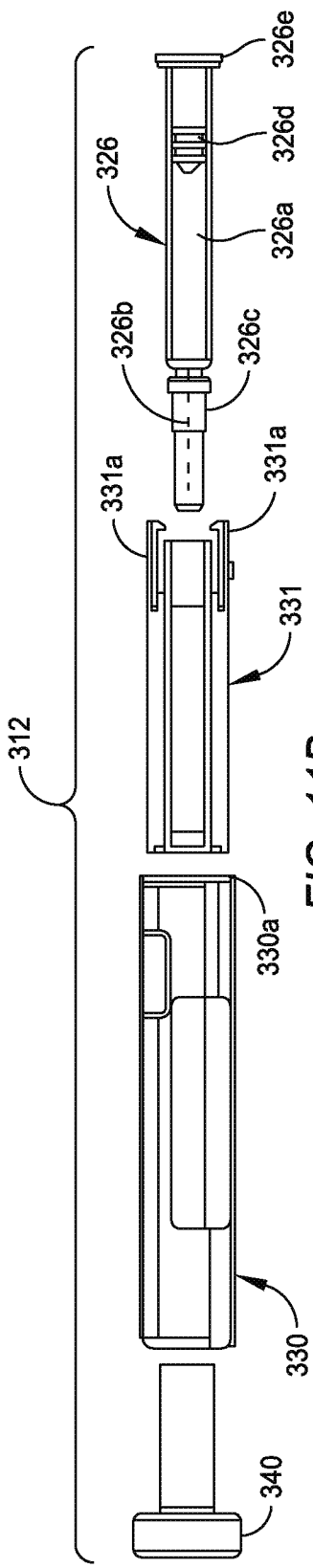

FIG. 11B

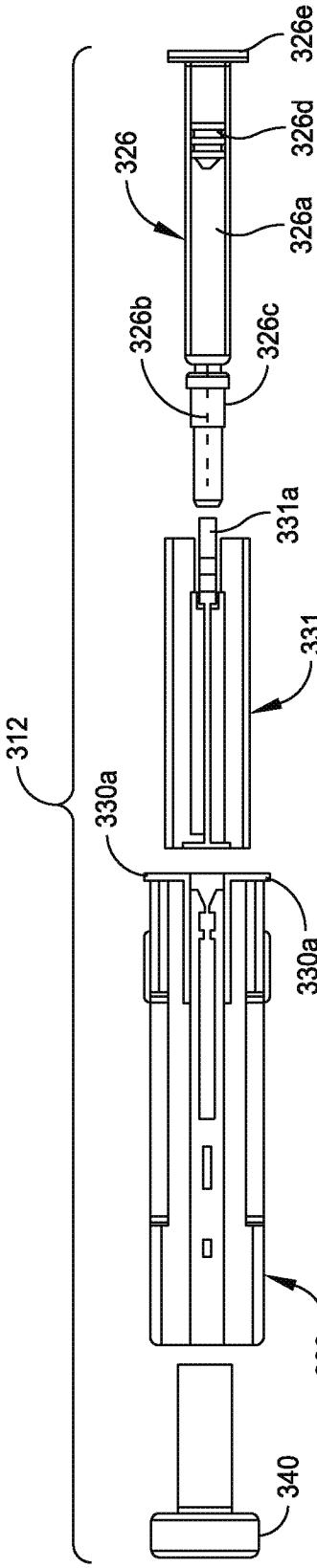

FIG. 11C

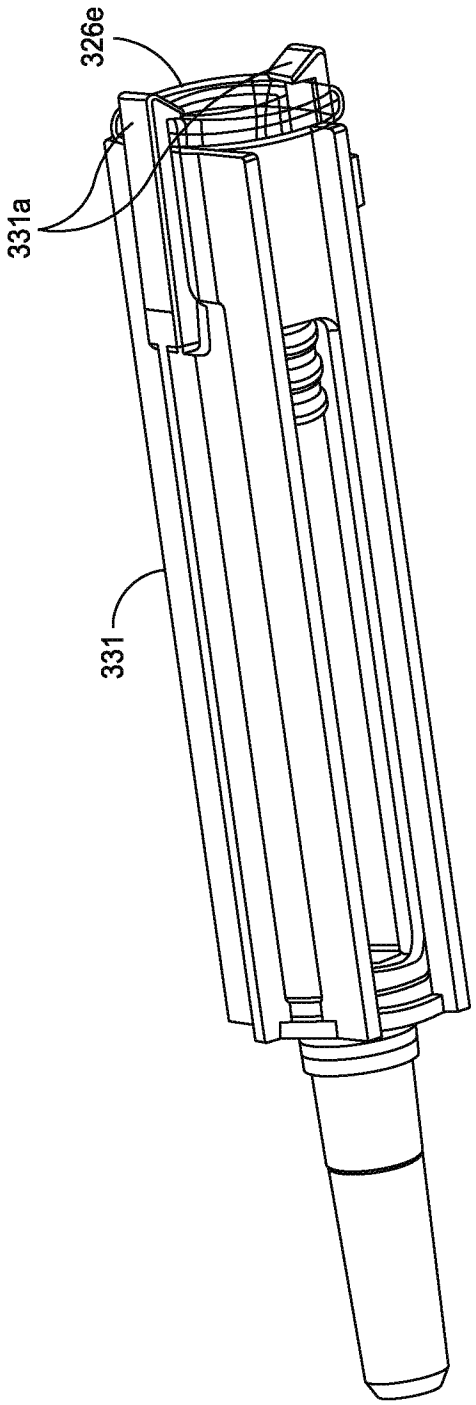

FIG. 12

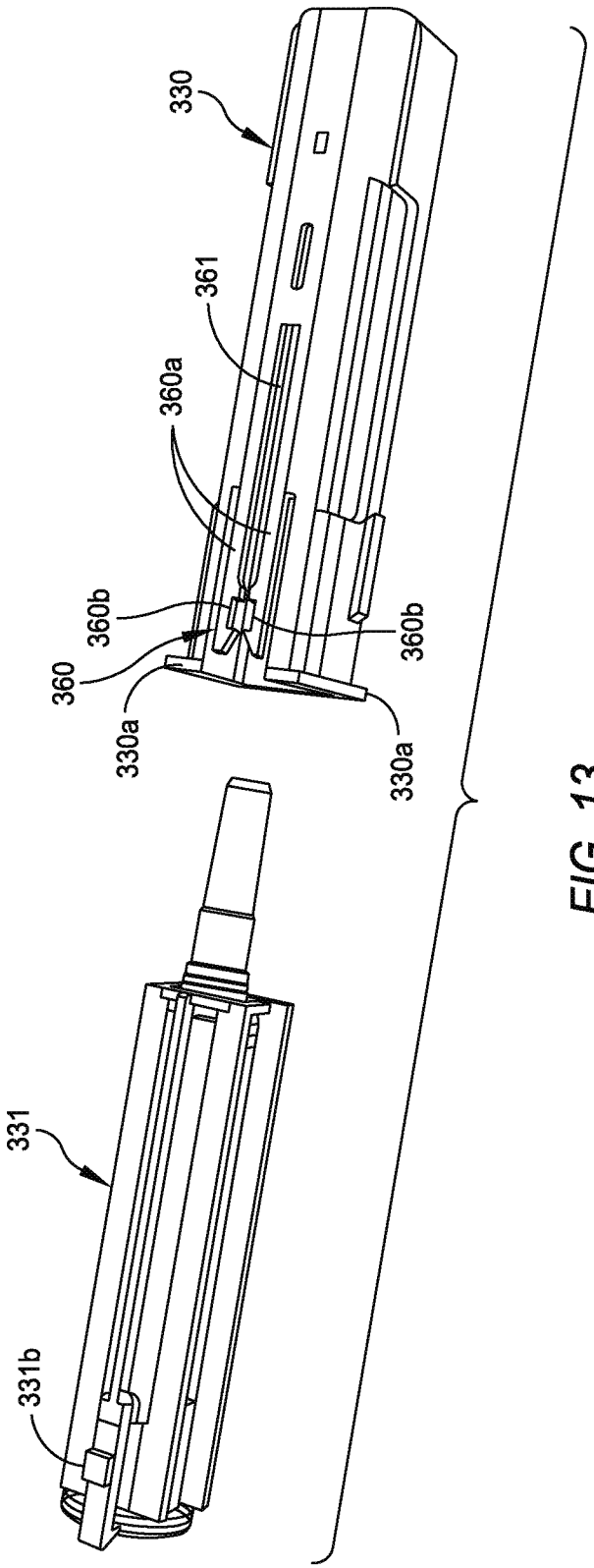

FIG. 13

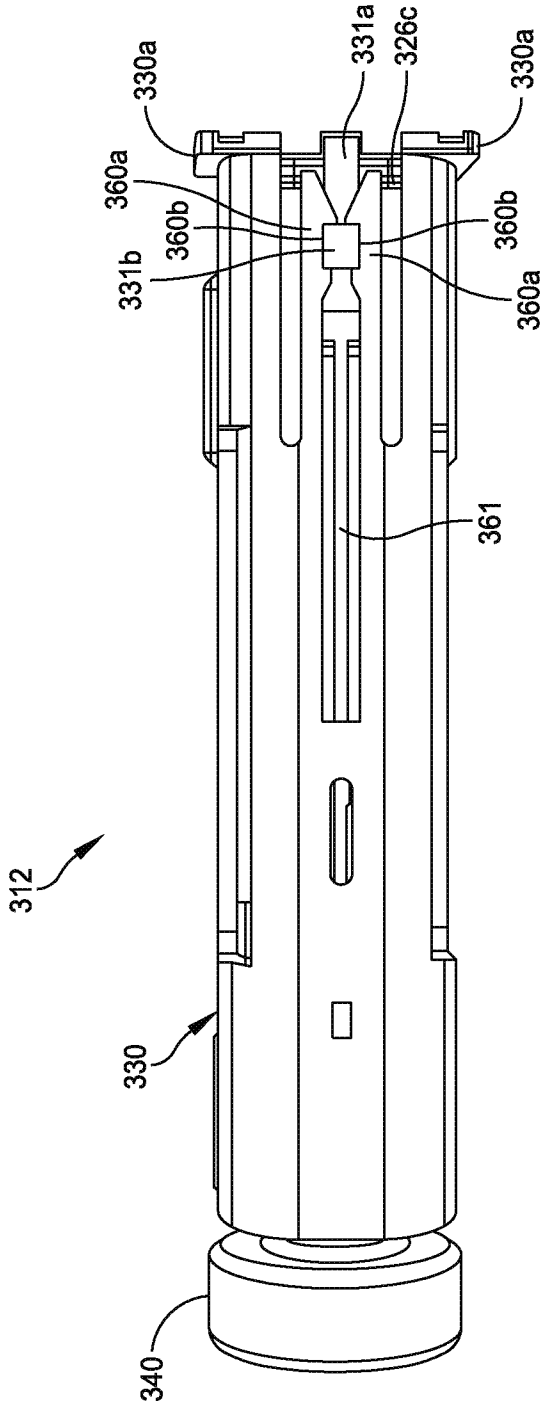

FIG. 14

Average of delta t		Injector			
solution viscosity (cp)	speed setting	CM2-1	CM2-2	CM2-3	Grand Total
1	low(0)	4.9	5.0	5.0	4.9
	med(28)	3.5	3.6	3.5	3.5
	fast(44)	2.9			2.9
19	low(0)	8.1	9.6	9.3	9.0
	med(28)	6.4	6.7	6.3	6.5
	fast(44)	4.4			4.4
29	low(0)	11.8			11.8
	med(28)	7.5			7.5

FIG. 15

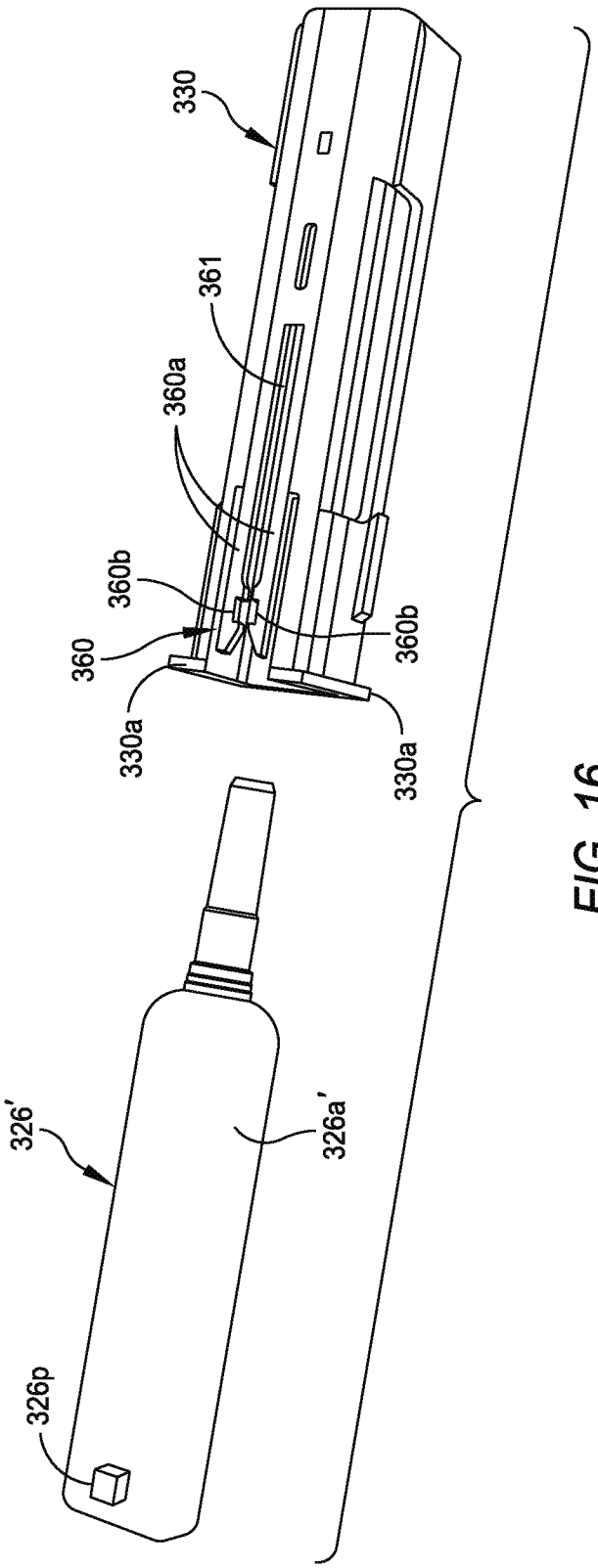

FIG. 16

INTERNATIONAL SEARCH REPORT

International application No.
PCT/US 09/44693

A. CLASSIFICATION OF SUBJECT MATTER
IPC(8) - A61M 5/20 (2009.01)
USPC - 604/156
According to International Patent Classification (IPC) or to both national classification and IPC

B. FIELDS SEARCHED

Minimum documentation searched (classification system followed by classification symbols)
IPC(8) - A61M 5/20 (2009.01)
USPC - 604/156

Documentation searched other than minimum documentation to the extent that such documents are included in the fields searched
USPC - 604/19, 48, 93.01, 130, 131, 154, 155, 156
(Text Search)

Electronic data base consulted during the international search (name of data base and, where practicable, search terms used)
PubWEST (PGPB, USPT, USOC, EPAB, JPAB); DialogPRO (Engineering) and Google Scholar.
Search Terms: autoinjector, auto injector, auto-injector, motor, syringe, needle, slot, resilient, arm, detent, projection, slid$, mov$, project$, engag$, latch, slit, latch$, lock, lock$, shield, cover, cap, flexible, releas$, adhesive

C. DOCUMENTS CONSIDERED TO BE RELEVANT

Category*	Citation of document, with indication, where appropriate, of the relevant passages	Relevant to claim No.
X --- Y	US 2005/0277885 A1 (SCHERER) 15 December 2005 (15.12.2005) fig 1, 2; para [0002], [0018] -[0021], [0023]-[0025].	1, 2, 10-12, 64, 76-78, 80 -84 and 91 --- 3-9, 13-63, 65-75, 85-90 and 92-94
Y	US 2001/0005781 A1 (BERGENS et al.) 28 June 2001 (28.06.2001) fig 3; para [0001], [0011], [0014], [0017], [0018], [0020], [0023], [0034]-[0036].	3-9, 17-63, 70-75, 85-88, 93 and 94
Y	US 4,421,107 A (ESTES et al.) 20 December 1983 (20.12.1983) fig 13; col 9, ln 13-30.	5-6, 14, 47, 49, 67 and 69
Y	US 2005/0171477 A1 (RUBIN et al.) 04 August 2005 (04.08.2005) fig 8; para [0006], [0035], [0049], [0052], [0053], [0056], [0058]	4-9, 13-16, 18-28, 30-40, 45-49, 65-69, 86-90, 92
Y	US 2007/0265568 A1 (TSALS et al.) 15 November 2007 (15.11.2007) fig 2; para [0051].	7
Y	US 2006/0157064 A1 (DAVISON et al.) 20 July 2006 (20.07.2006) para [0071], [0104].	8, 15 and 19
Y	US 2004/0153008 A1 (SHARF et al.) 05 August 2004 (05.08.2004) para [0013], [0044].	9, 16 and 20
Y	US 2008/0039795 A1 (SLATE et al.) 14 February 2008 (14.02.2008) para [0001], [0027].	21-28, 33-40, 44, 51, 73
Y	US 6,547,755 B1 (LIPPE et al.) 15 April 2003 (15.04.2003) col 1, ln 10-21; col 2, ln 50-67; col 9, ln 21-67.	27 and 39
Y	US 6,599,272 B1 (HJERTMAN et al.) 29 July 2003 (29.07.2003) col 3, ln 64-67; col 4, ln 1-67; col 9, ln 64-67; col 10, 1-45.	50-63 and 94

☐ Further documents are listed in the continuation of Box C. ☐

* Special categories of cited documents:
"A" document defining the general state of the art which is not considered to be of particular relevance
"E" earlier application or patent but published on or after the international filing date
"L" document which may throw doubts on priority claim(s) or which is cited to establish the publication date of another citation or other special reason (as specified)
"O" document referring to an oral disclosure, use, exhibition or other means
"P" document published prior to the international filing date but later than the priority date claimed
"T" later document published after the international filing date or priority date and not in conflict with the application but cited to understand the principle or theory underlying the invention
"X" document of particular relevance; the claimed invention cannot be considered novel or cannot be considered to involve an inventive step when the document is taken alone
"Y" document of particular relevance; the claimed invention cannot be considered to involve an inventive step when the document is combined with one or more other such documents, such combination being obvious to a person skilled in the art
"&" document member of the same patent family

Date of the actual completion of the international search
10 July 2009 (10.07.2009)

Date of mailing of the international search report
21 JUL 2009

Name and mailing address of the ISA/US
Mail Stop PCT, Attn: ISA/US, Commissioner for Patents
P.O. Box 1450, Alexandria, Virginia 22313-1450
Facsimile No. 571-273-3201

Authorized officer:
Lee W. Young
PCT Helpdesk: 571-272-4300
PCT OSP: 571-272-7774