US 20030073552A1

(19) United States

(12) Patent Application Publication

(10) Pub. No.: US 2003/0073552 A1

(43) Pub. Date: Apr. 17, 2003

Knight

(54) BIOSENSORY ERGONOMIC CHAIR

(76) Inventor: **Michael W. Knight**, Topanga, CA (US)

Correspondence Address:
MICHAEL W. KNOGHT
C/O WARREN WHITIS
3701 BIG HORN TRAIL
PLANO, TX 75075 (US)

(21) Appl. No.: **09/975,662**

(22) Filed: **Oct. 11, 2001**

Publication Classification

(51) **Int. Cl.**[7] **A63B 15/02**; A63B 71/00

(52) **U.S. Cl.** **482/148**; 482/1

(57) **ABSTRACT**

The current apparatus is a chair assembly comprised of a plurality of structural, pivotal, sensor, and material designs to provide for the comfort and health of the user. The frame provides the user with substantial support along the entire region of the user's body. The frame adjusts, both vertically and horizontally, via adjustable ball joints which operate in conjunction with the body joints. The frame, in conjunction with interchangeable hand modules, attachments, and accessories, allows for resistance exercises via use of manual tension springs. Contoured pads mounted along the frame contain a plurality of sensors to pick up signals from various regions of the users body including muscle, bone, nerve, O2, and load. The data is collected and analyzed by a computer providing for corrections in chair adjustment and exercise resistance instruction with recordation of all activity to facilitate healing and documentation of treatment.

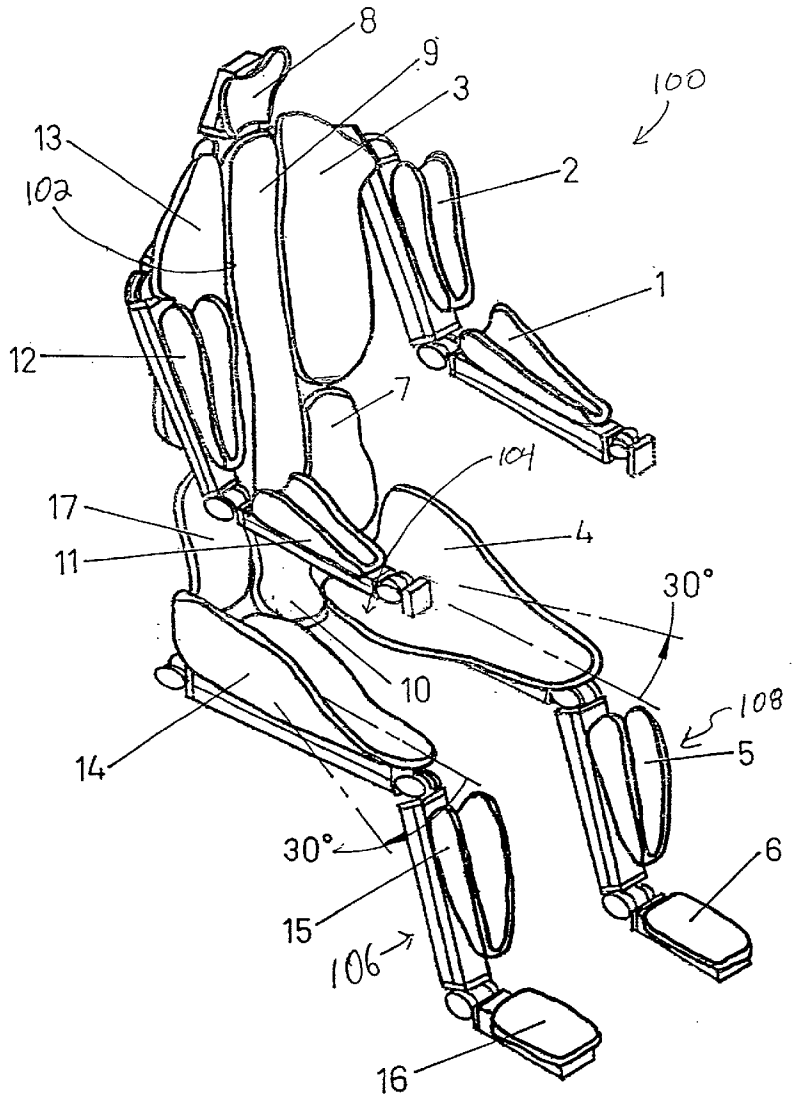

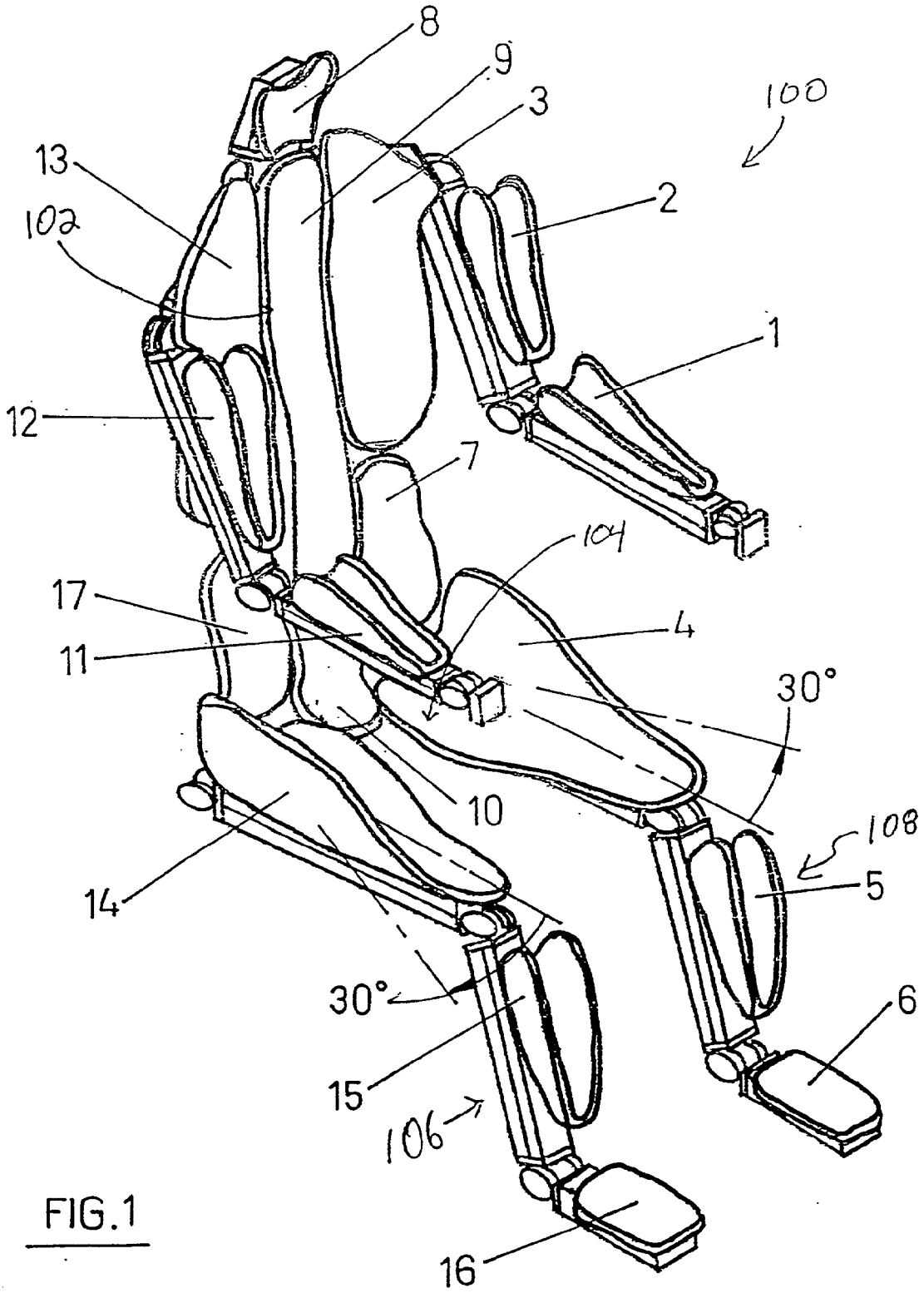

FIG.1

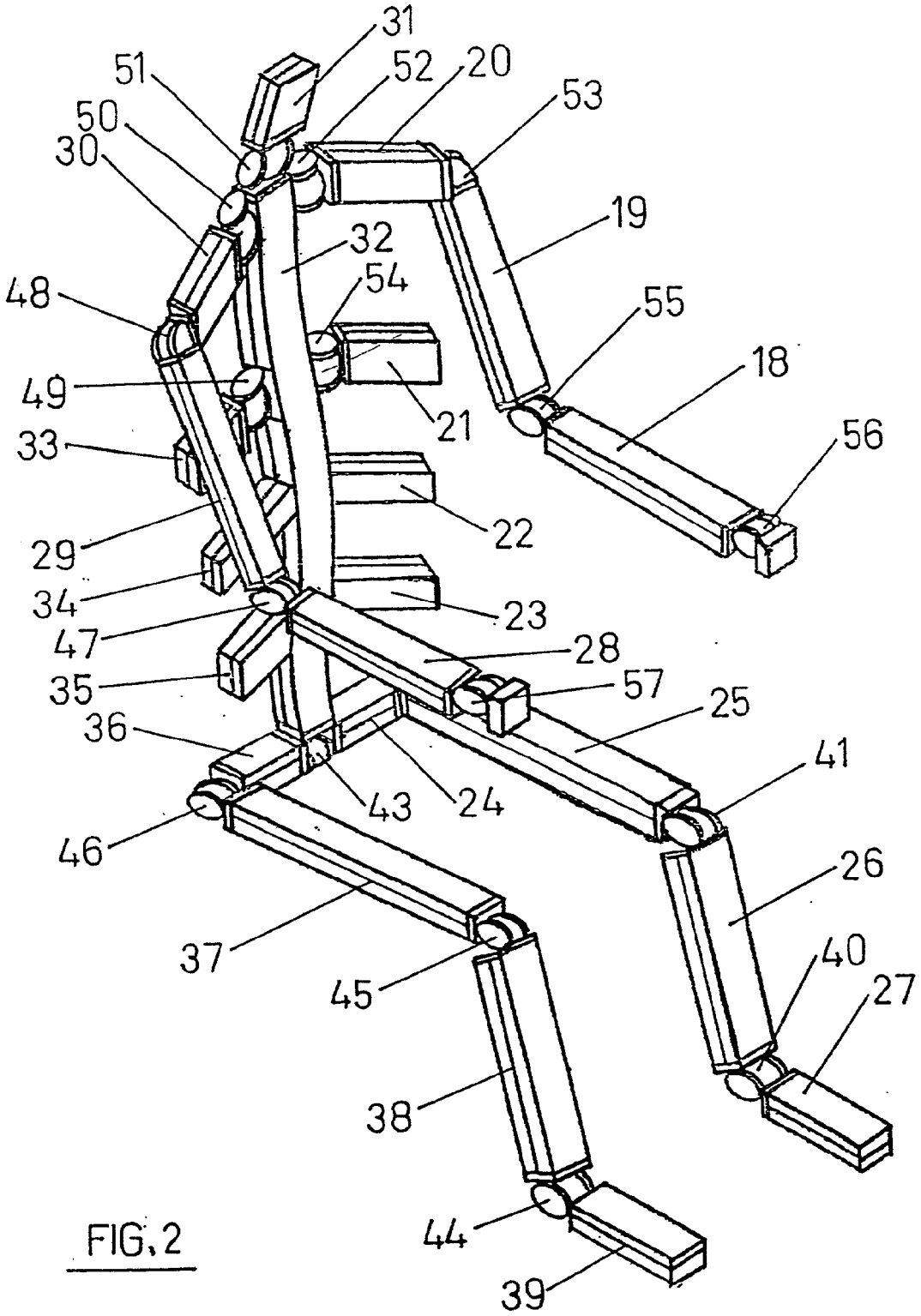
31
51
52
20
53
50
30
19
32
54
48
55
18
49
21
56
33
22
29
34
23
47
28
35
57
25
36
41
43
24
46
26
37
40
45
27
38
44
39

FIG. 2

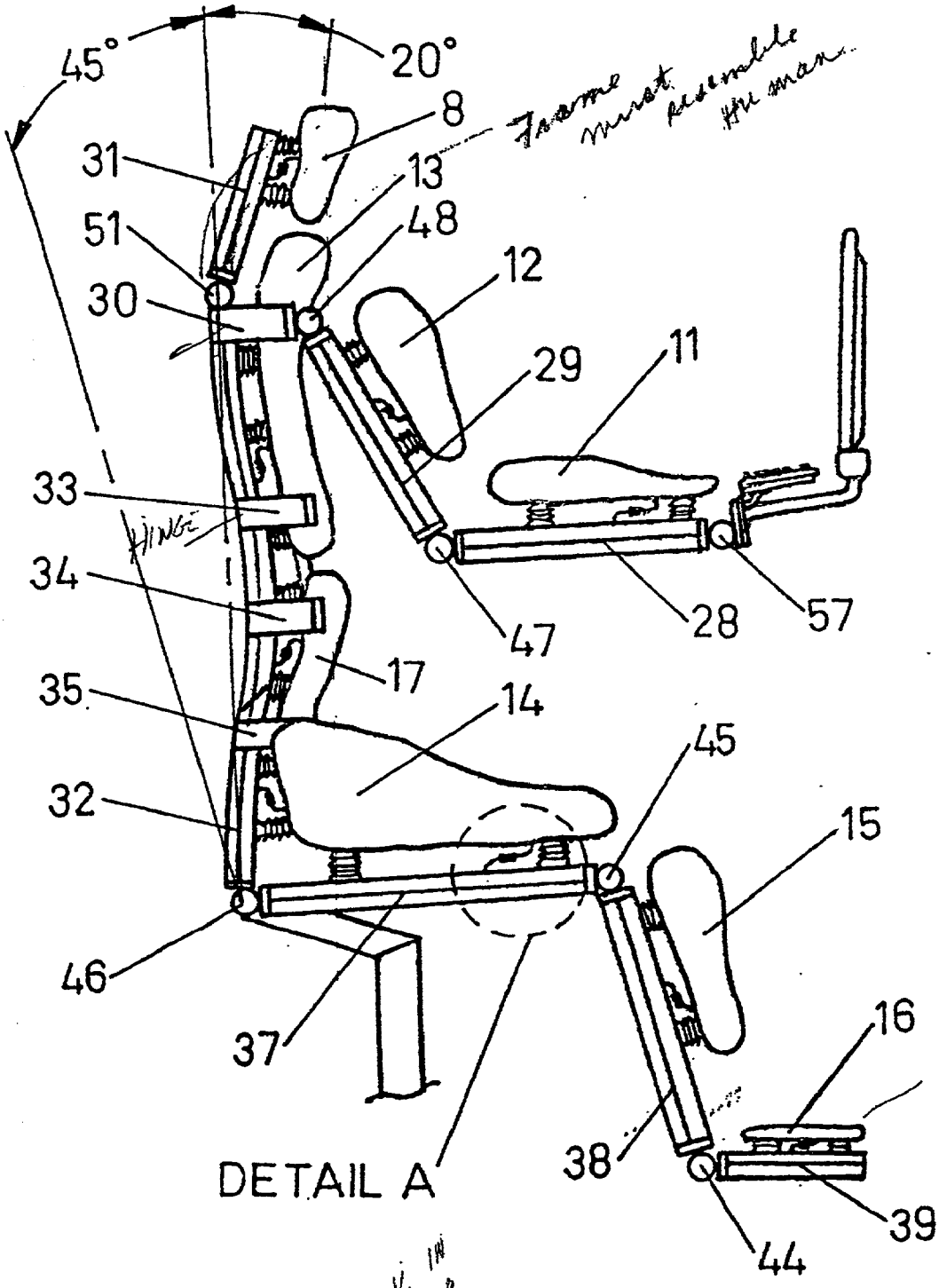

FIG.3

BEERIL IN FRAME

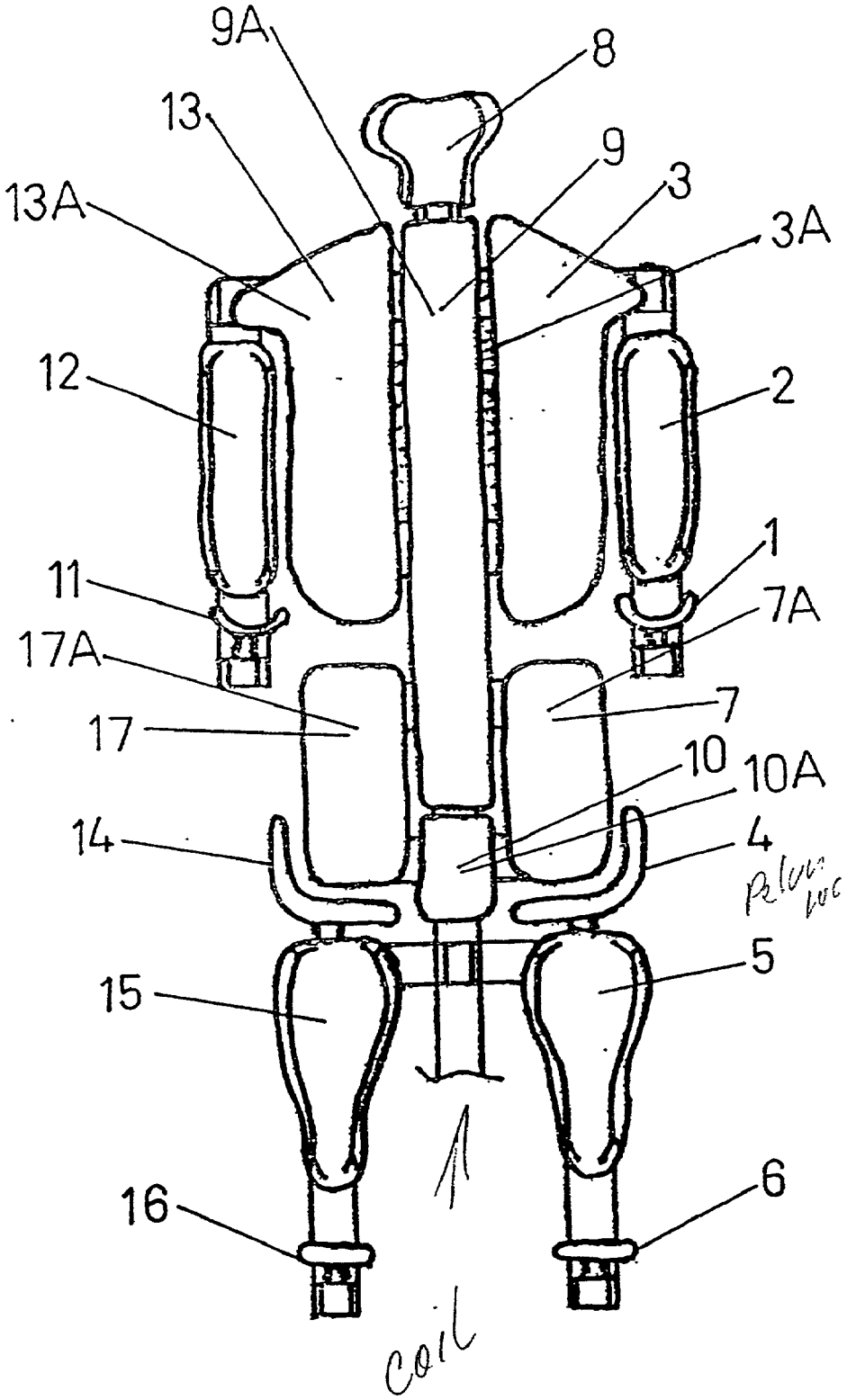

FIG. 4

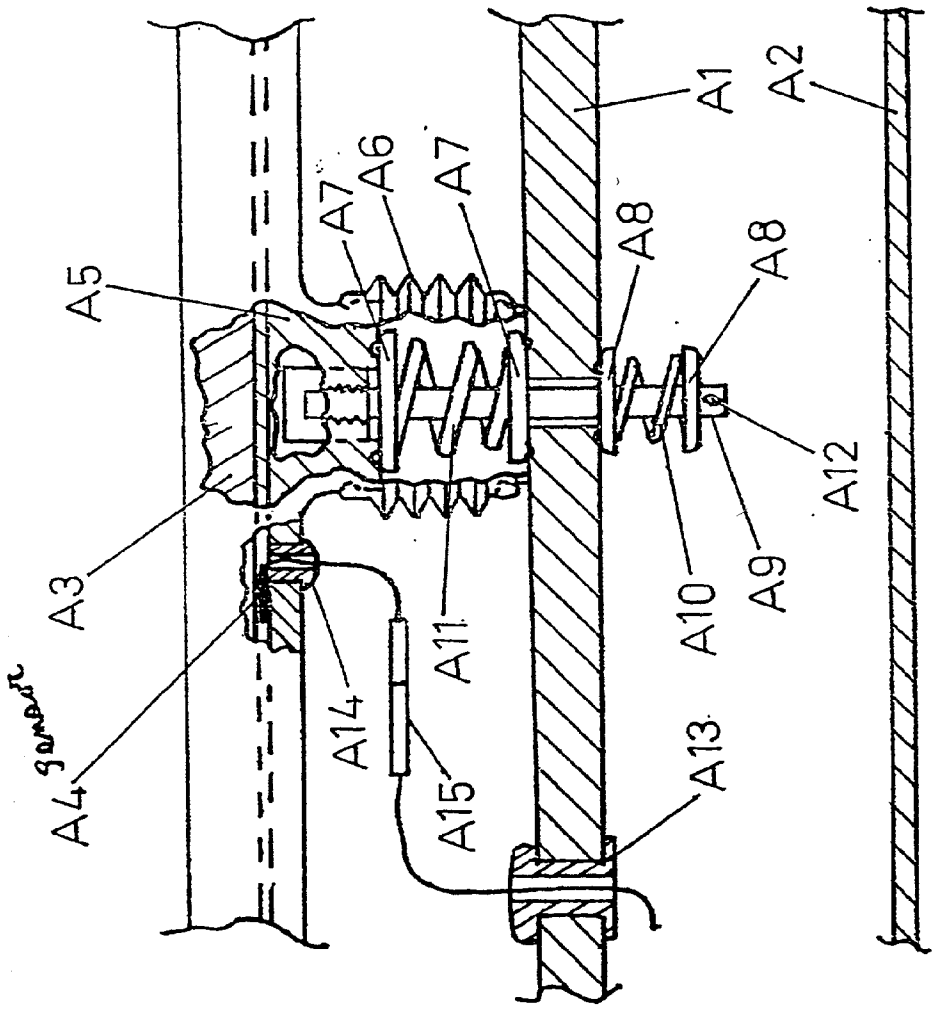

FIG. 5B

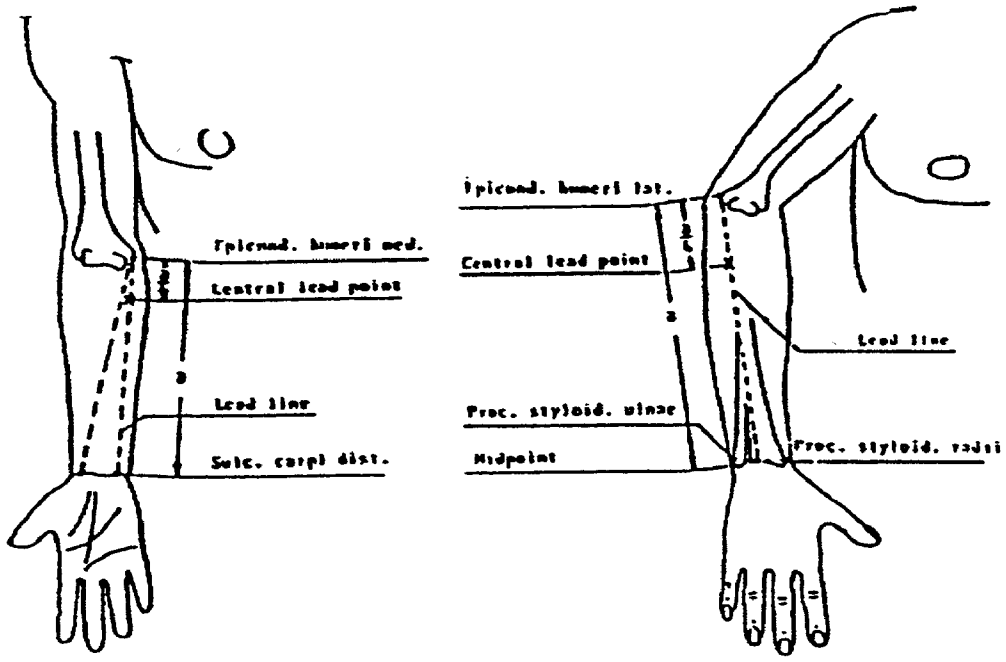
Epicond. humeri med.
Central lead point
Lead line
Sulc. carpi dist.
Epicond. humeri lat.
Central lead point
Lead line
Proc. styloid. ulnae
Midpoint
Proc. styloid. radii

FIG 7.

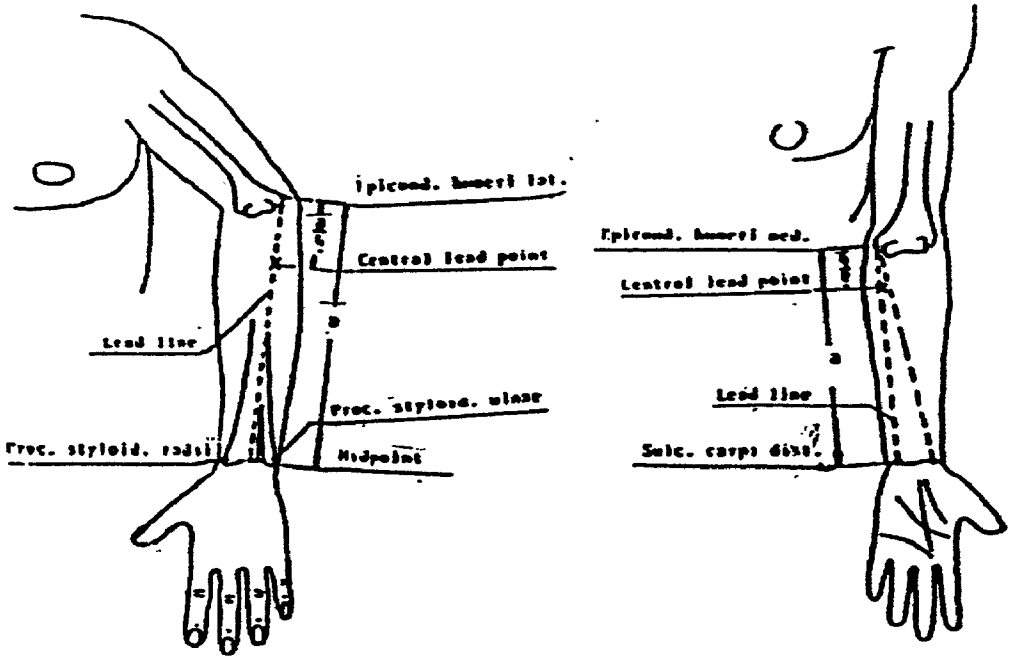
Epicond. humeri lat.
Central lead point
Lead line
Proc. styloid. ulnae
Midpoint
Proc. styloid. radii
Epicond. humeri med.
Central lead point
Lead line
Sulc. carpi dist.

FIG 6.

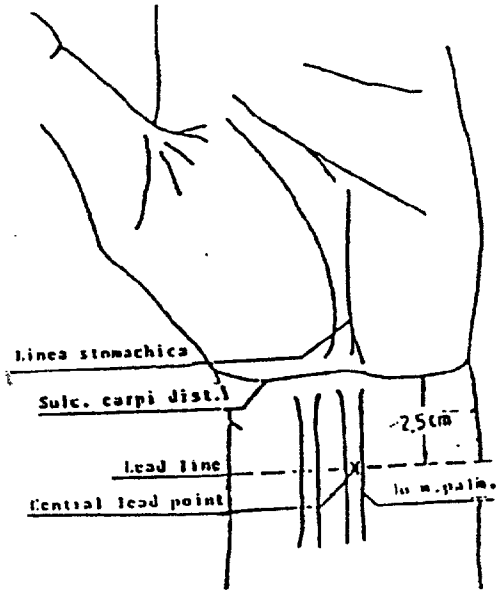

FIG.8

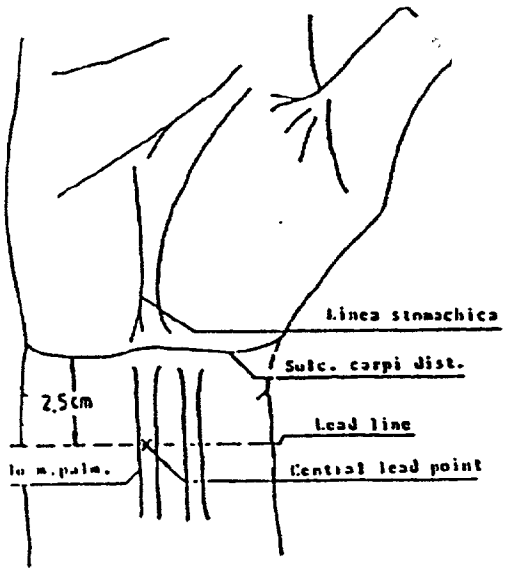

FIG.9

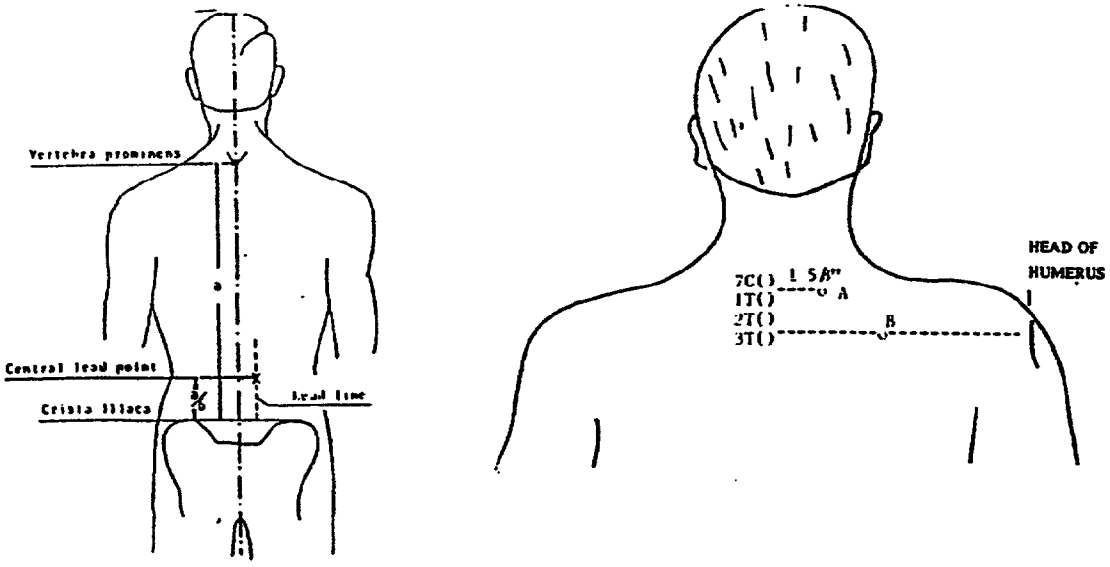

FIG.10

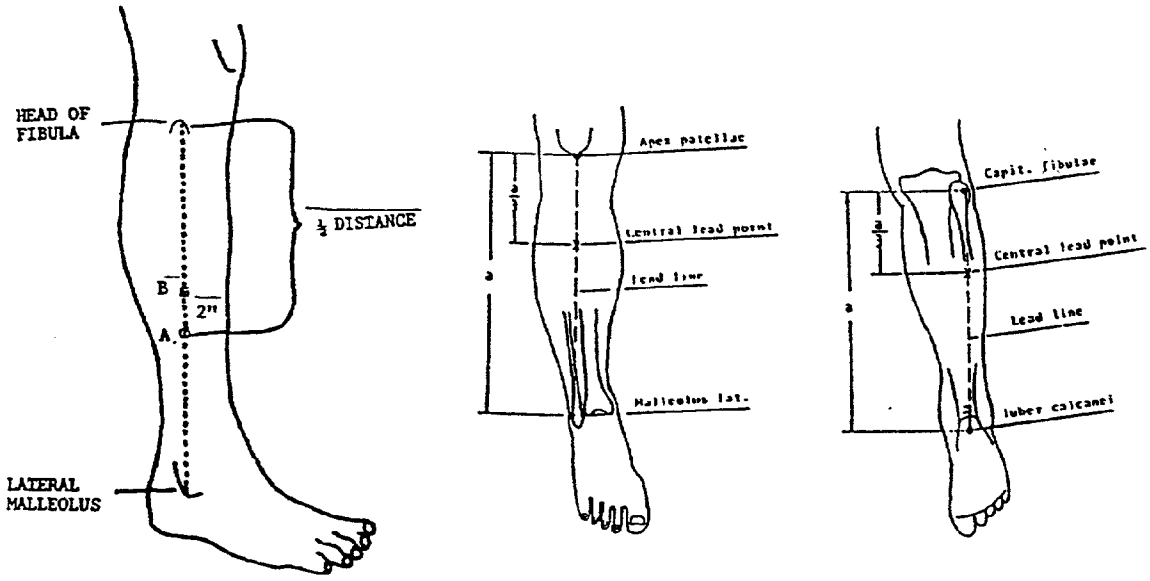
HEAD OF FIBULA
½ DISTANCE
B
2"
A
LATERAL MALLEOLUS
Apex patellae
Central lead point
Lead line
Malleolus lat.
Capit. fibulae
Central lead point
Lead line
Tuber calcanei

FIG. 11

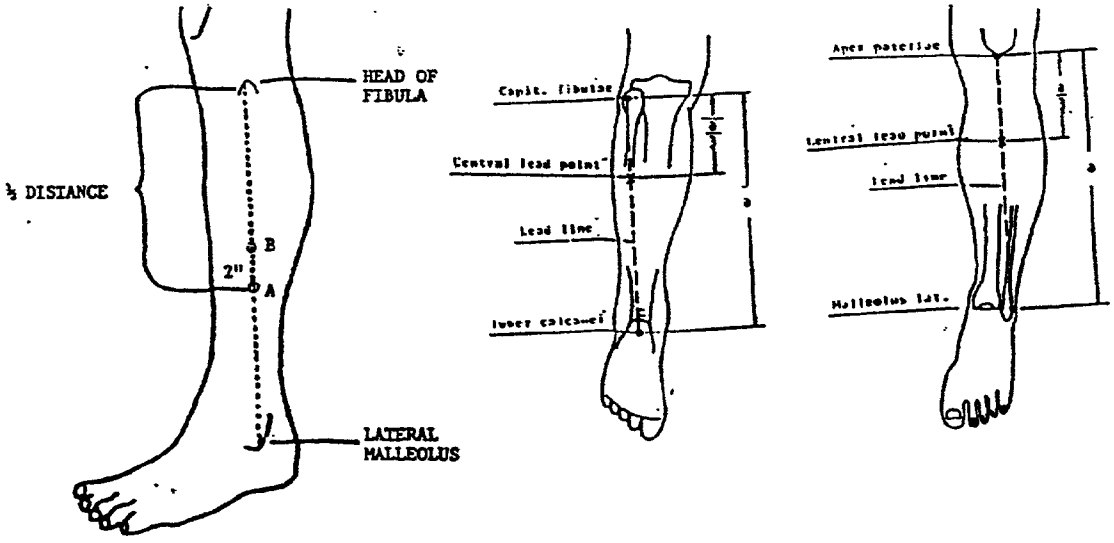
HEAD OF FIBULA
½ DISTANCE
B
2"
A
LATERAL MALLEOLUS
Capit. fibulae
Central lead point
Lead line
Tuber calcanei
Apex patellae
Central lead point
Lead line
Malleolus lat.

FIG. 12

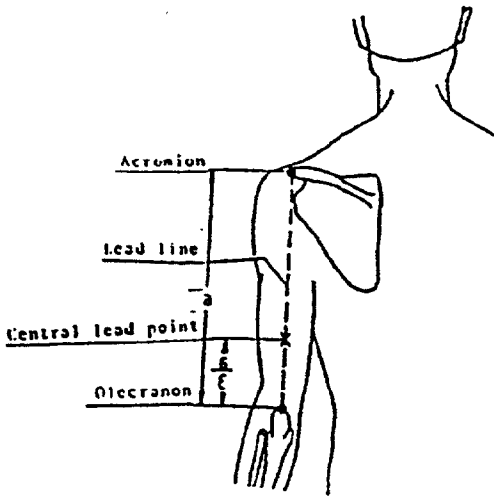

FIG.13

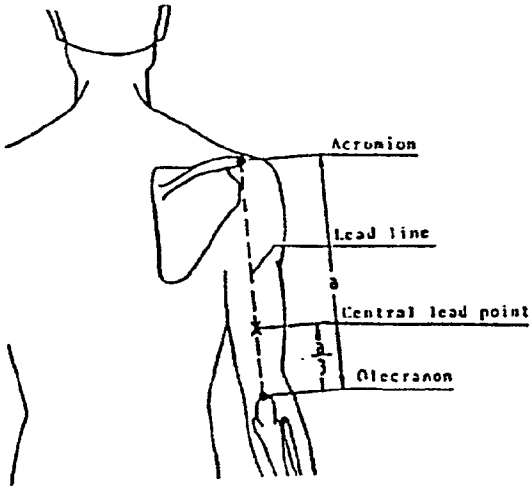

FIG.14

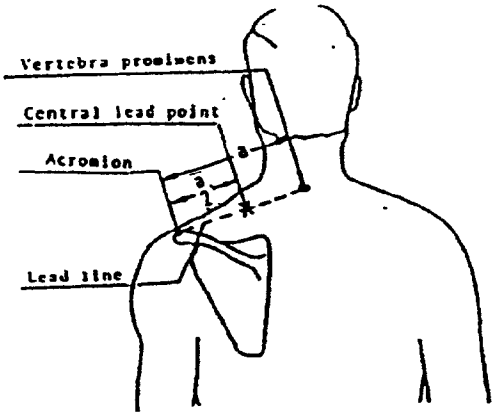

FIG.15

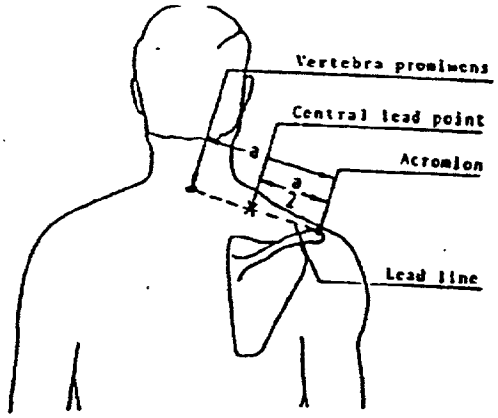

FIG.16

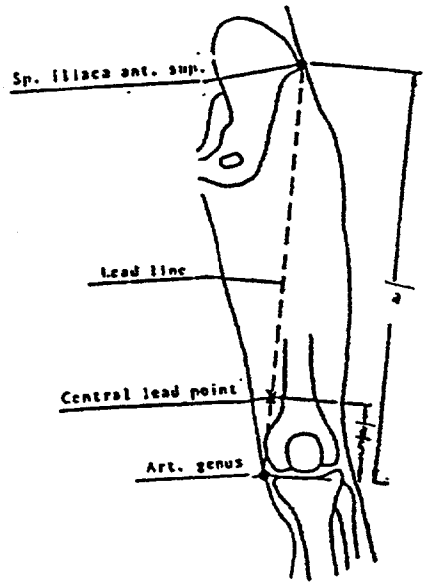
Sp. iliaca ant. sup.
Lead line
Central lead point
Art. genus

FIG.17

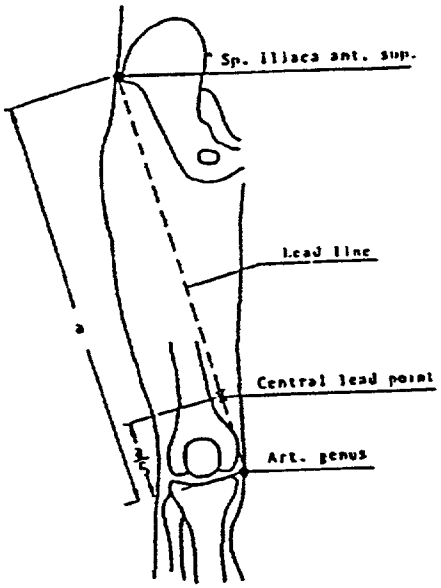
Sp. iliaca ant. sup.
Lead line
Central lead point
Art. genus

FIG.18

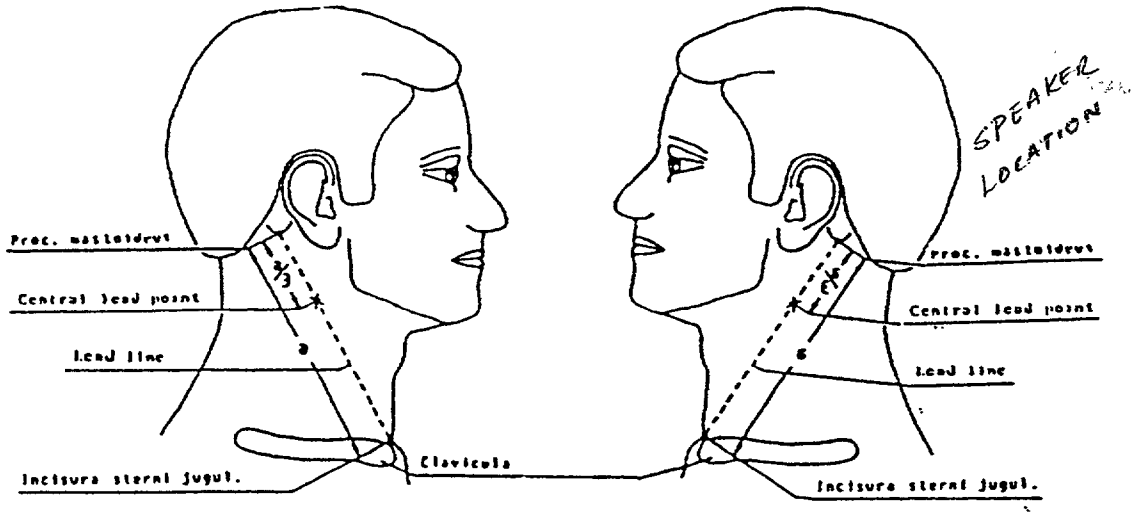
Proc. mastoideus
Central lead point
Lead line
Incisura sterni jugul.
Clavicula
Proc. mastoideus
Central lead point
Lead line
Incisura sterni jugul.
SPEAKER LOCATION

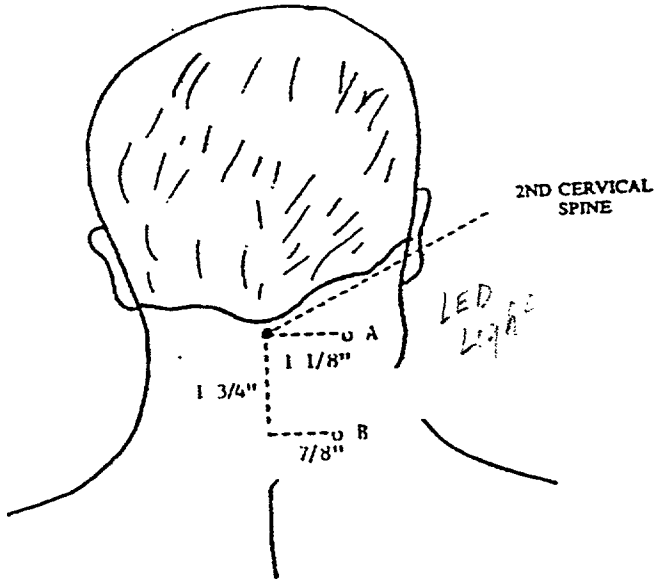
2ND CERVICAL SPINE
A
1 1/8"
1 3/4"
B
7/8"
LED LIGHT

FIG.19

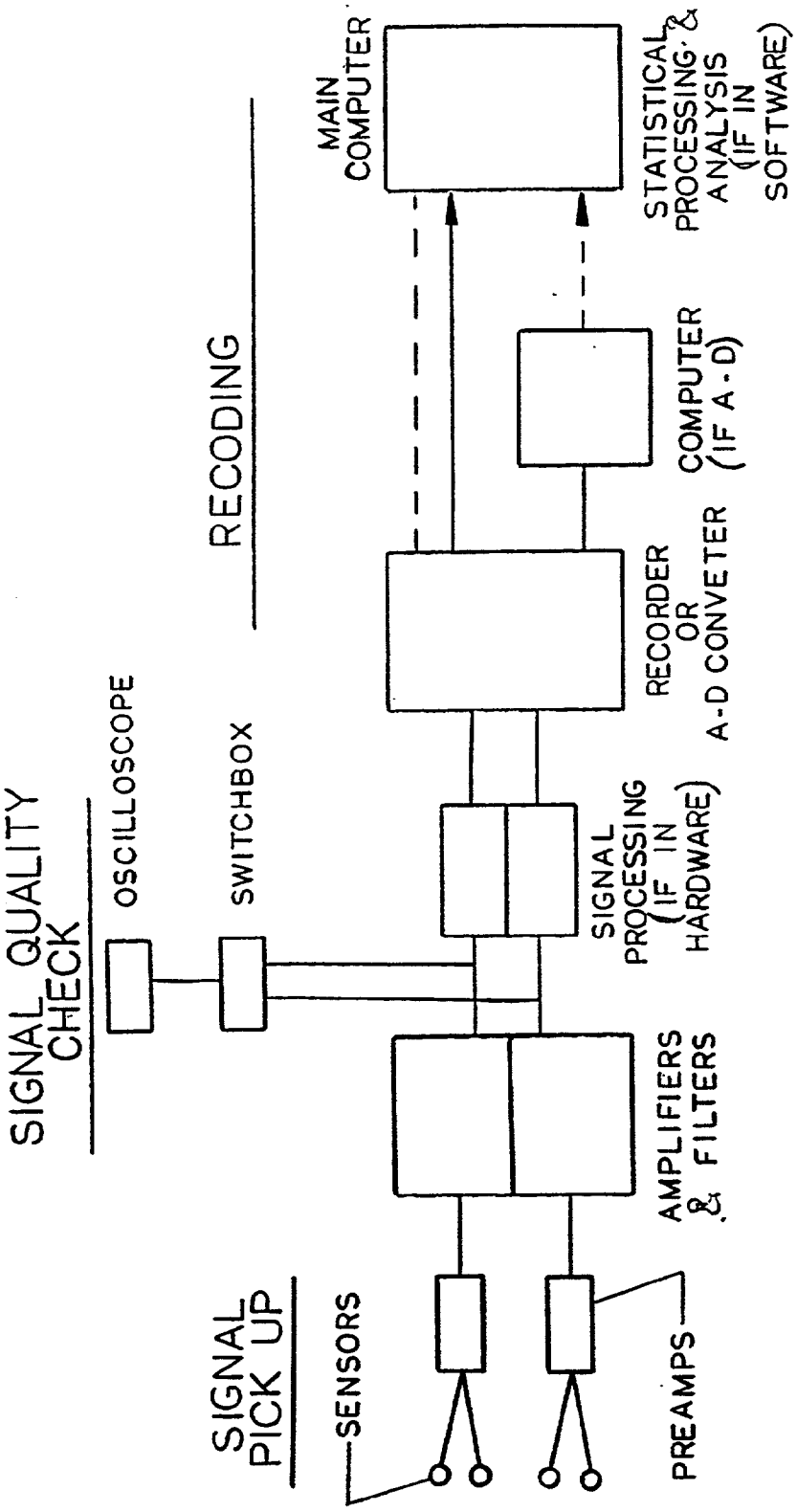
SIGNAL QUALITY CHECK
OSCILLOSCOPE
SWITCHBOX
RECODING
MAIN COMPUTER
STATISTICAL PROCESSING & ANALYSIS (IF IN SOFTWARE)
COMPUTER (IF A-D)
RECORDER OR A-D CONVETER
SIGNAL PROCESSING (IF IN HARDWARE)
AMPLIFIERS & FILTERS
SIGNAL PICK UP
SENSORS
PREAMPS

FIG. 20

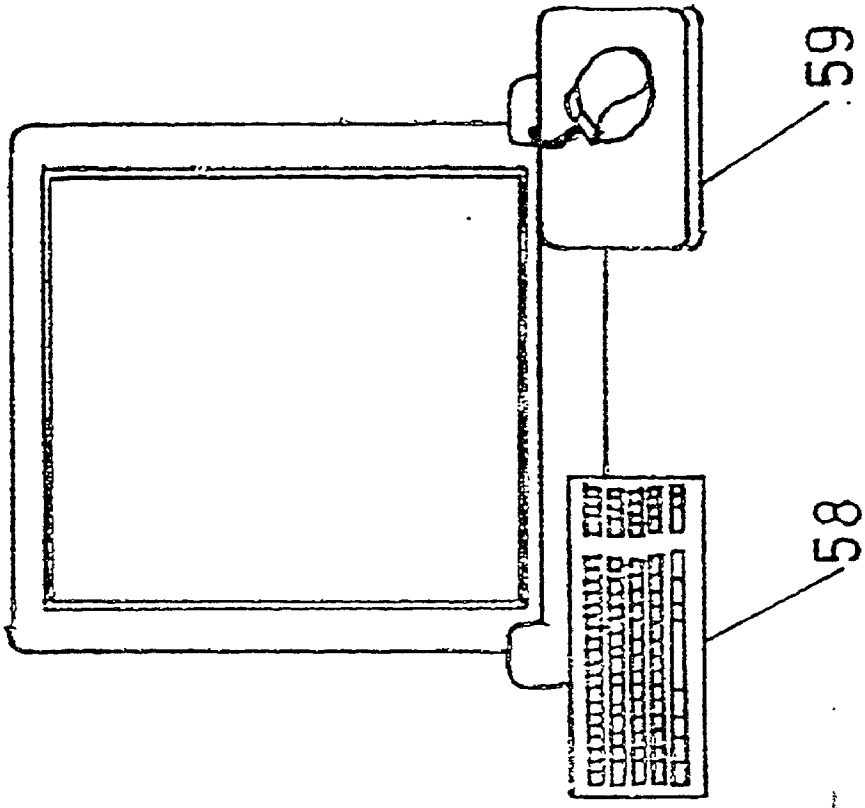

FIG. 22

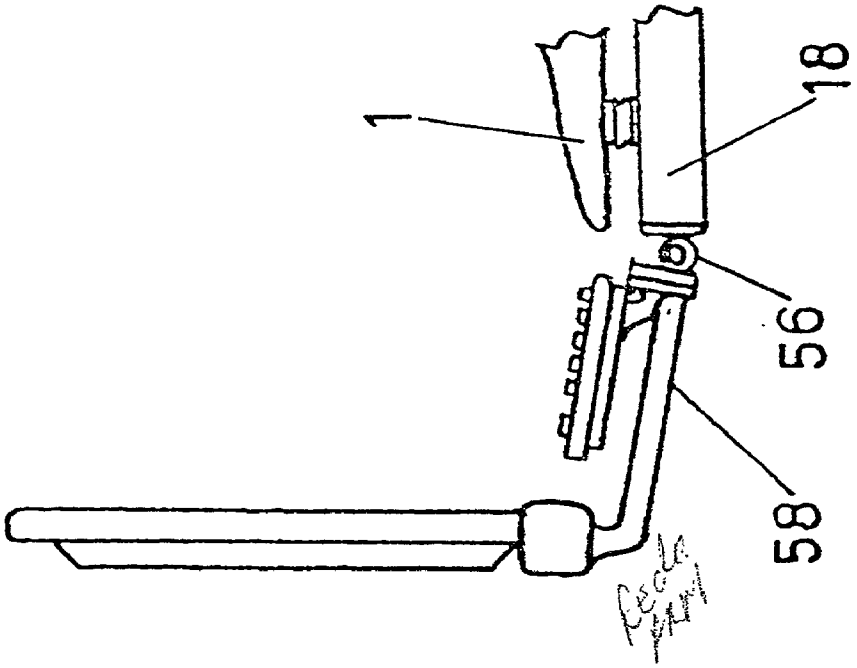

FIG. 21

BIOSENSORY ERGONOMIC CHAIR

BACKGROUND OF THE INVENTION

[0001] 1. Field of the Invention

[0002] The present invention relates to ergonomic chairs and, more particularly, but not by way of limitation, to a chair having a plurality of sensors and adjustments facilitating the health and comfort of the chair user.

[0003] 2. History of Related Art

[0004] Chair designs have changed dramatically throughout the centuries. Likewise, chair designs have improved dramatically relative to the comfort of the user in recent decades. The most striking innovation in chair design improvements has been, however, technologically related. The use of improved material improved structural designs in conjunction with sensor and feedback systems integrated into the chairs have found widespread popularity among those users that are relegated to sitting in such chairs for long periods of time. Both health and comfort issues can arise when the chair conforms to the user's body and/or provides work thereto. The utilization of sensors in conjunction with such design features have further improved the quality of life of the chair user and formed the genesis of a new era of ergonomics by facilitating aspects of chair function not heretofore deemed possible or economically feasible.

[0005] The following prior art patents pertain to such improvements in chair designs. U.S. Pat. No. 5,826,940 to Hodgdon describes a multiposition chair assembly supporting a user through various sitting postures. Adjustment of the "reactive" chair includes tilt of the back support dependent upon a corresponding tilt of the lower support.

[0006] Likewise, U.S. Pat. No. 5,993,401 to Inbe et al generally describes a biological parameter detecting unit and a sensory stimulus associated therewith. By providing a stimulus amount according to the detected biological parameter, it is said that a relaxed state is efficiently induced. U.S. Pat. No. 5,896,060 to McGregor et al. generally describes a method for evaluating a joint of a human. Biomechanical properties and clinical evaluation of the joint are, in combination, utilized to provide an evaluation of the joint. Such evaluations should be important to modern chair design, and U.S. Pat. No. 4,993,164 to Jacobsen describes a chair including a measuring apparatus for determining the contour of the back of an individual. The measuring apparatus has a back portion including a back engaging member with a deformable sheet carrying a plurality of spring steel transverse strips. The support members are vertically movable to deform according to the vertical contour of the individual.

[0007] Additional related art includes U.S. Pat. No. 5,582,460 to Schultz which generally describes a chair including a blow molded back rest rearwardly pivotable and vertically adjustable. A handle and latch, which includes a detent finger, are connected to a carrier block and positionable such that the finger engages a series of vertically spaced holes thereby securing the back rest in a desired vertical position, thus permitting the back rest to be vertically adjusted. U.S. Pat. No. 5,304,112 to Mrklas et al. generally describes a system that detects the stress level of a person and provides stress reduction in response thereto. The Mrklas chair includes a support and massage module, including vibrating elements, and part of an environmental control module as well as heating elements. Chair controls include mechanical comfort controls and facilitate the positioning of the chair settings. A stress detection module may include an expansion strap to measure breathing, heart beat detection, and electrode sensors to measure galvanometric skin resistance and brain wave activity. The detection module may include biological sensors attached to the chair or separately attachable to the subject. U.S. Pat. No. 4,702,108 to Amundsen et al. generally describes a chair having a support frame, a seat, a foot rest and load cells connected to the support frame facilitating measurement of the isometric force exerted by muscle groups of a human. The load cells are disposed about six track systems and provide alignment with a selected group of muscles. Restraint assemblies are used to immobilize parts of a human body for concurrently testing the nonrestrained parts of the body. Finally, U.S. Pat. No. 4,195,626 to Schweitzer generally describes a biofeedback chamber for applying stimuli to a person and measuring the person's response thereto. The Stimuli generator provides generation of visual, audible, tactile, electrical, temperature, pressure, stretch, vibration, and linear acceleration stimuli. Galvanic skin resistance, peripheral circulation and peripheral temperature, heart frequency, blood pressure, respiratory frequency and depth of respiration, electromyogram and electroencephalogram may be measured for response to the stimuli.

[0008] It has thus been recognized that the technological improvements of prior chair designs provide a market advantage over conventional designs, but additional improvements are needed. Such improvements can afford the user of the chair enhanced safety, comfort and health while minimizing the expenses associated therewith. The present invention provides such an improved ergonomic chair by incorporating a series of structural, pivotal, sensor and material designs greatly enhancing the comfort and health aspect of the chair unit.

SUMMARY OF THE INVENTION

[0009] The present invention relates to ergonomic chairs having improved structural aspects with enhanced technological designs including sensors with pivotal dynamics and material enhancements. More particularly, one aspect of the present invention relates to the improvements set forth below.

BRIEF DESCRIPTION OF THE DRAWINGS

[0010] A more complete understanding of the method and apparatus of the present invention may be obtained by reference to the following Detailed Description when taken in conjunction with the accompanying Drawings wherein:

[0011] **FIG. 1** is a perspective view of the chair assembly showing the seating pad assemblies and the support structure assemblies, displaying the principals of construction of the present invention;

[0012] **FIG. 2** is a perspective view of the chair assembly showing the support structure assemblies and the ball joint assemblies, displaying the principals of construction of the present invention;

[0013] **FIG. 3** is a side-elevational view of the chair assembly showing the seating pad assemblies, the support structure assemblies and the ball joint assemblies, displaying the principals of construction of the present invention;

[0014] **FIG. 4** is a front elevational view of the chair assembly showing the seating pad assemblies, displaying the principals of construction of the present invention;

[0015] **FIG. 5A** is a rear elevational view of the chair assembly showing the support structure assemblies and the ball joint assemblies, displaying the principals of construction of the present invention;

[0016] **FIG. 5B** is an enlarged detail view of the mounting points of the seating pad assemblies and the support structure assemblies, displaying the principals of construction of the present invention;

[0017] **FIG. 6** is a diagrammatic schematic illustrating sensor pad locations for the right forearm;

[0018] **FIG. 7** is a diagrammatic schematic illustrating sensor pad locations for the left forearm;

[0019] **FIG. 8** is a diagrammatic schematic illustrating sensor pad locations for the left wrist;

[0020] **FIG. 9** is a diagrammatic schematic illustrating sensor pad locations for the right wrist;

[0021] **FIG. 10** is a diagrammatic schematic illustrating sensor pad locations for the spine;

[0022] **FIG. 11** is a diagrammatic schematic illustrating sensor pad locations for the right calf;

[0023] **FIG. 12** is a diagrammatic schematic illustrating sensor pad locations for the left calf;

[0024] **FIG. 13** is a diagrammatic schematic illustrating sensor pad locations for the left tricep;

[0025] **FIG. 14** is a diagrammatic schematic illustrating sensor pad locations for the right tricep;

[0026] **FIG. 15** is a diagrammatic schematic illustrating sensor pad locations for the left shoulder blade;

[0027] **FIG. 16** is a diagrammatic schematic illustrating sensor pad locations for the right shoulder blade;

[0028] **FIG. 17** is a diagrammatic schematic illustrating sensor pad locations for the left thigh;

[0029] **FIG. 18** is a diagrammatic schematic illustrating sensor pad locations for the right thigh;

[0030] **FIG. 19** is a diagrammatic schematic illustrating sensor pad locations for the neck;

[0031] **FIG. 20** is a block diagram of the sensor system of the present invention;

[0032] **FIG. 21** is a fragmentary, side elevational view of the left hand module illustrating a monitor screen and keyboard; and

[0033] **FIG. 22** is a front elevational view of the left hand module and monitor screen of **FIG. 21** illustrating the keyboard and the right hand module with a mouse pad.

DETAILED DESCRIPTION OF THE INVENTION

[0034] Referring first to **FIG. 1**, there is shown a perspective view of the ergonomic chair **100** construction in accordance with the principles of the present invention. Chair **100** includes a back region **102** connected to a seating region **104**. Oppositely disposed leg sections **106** and **108** depend therefrom. To more fully understand the description of the present invention, the following parts list will be used in reference to the various elements of the present invention:

Parts List Assemblies	
1.	Left Forearm Pad Assembly
2.	Left Tricep Pad Assembly
3.	Left Shoulder Blade Pad Assembly
3a.	Left Shoulder Blade Pad Assembly with Multiple Rows of Rollers, manually or remotely operated
4.	Left Thigh Pad Assembly
5.	Left Calf Pad Assembly
6.	Left Foot Pad Assembly
7.	Left Kidney Pad Assembly
7a.	Left kidney pad assembly with multiple rows of rollers, manually or remotely operated
8.	Neck Pad Assembly
9.	Spine Pad Assembly
9a.	Spine pad assembly with 2 rows of rollers, manually or remotely operated
10.	Tail Bone Pad Assembly
10a.	Tail bone pad assembly with 2 rows of rollers, manually or remotely operated
11.	Right Forearm Pad Assembly
12.	Right Tricep Pad Assembly
13.	Right Shoulder Blade Pad Assembly
13a.	Right shoulder blade pad assembly with multiple rows of rollers, manually or remotely operated
14.	Right Thigh Pad Assembly
15.	Right Calf Pad Assembly
16.	Right Foot Pad Assembly
17.	Right Kidney Pad Assembly
17a.	Right kidney pad assembly with multiple rows of rollers, manually or remotely operated
18.	Left Forearm Support Structure Assembly
19.	Left Tricep Support Structure Assembly
20.	Left Shoulder Support Structure Assembly
21.	Left Shoulder Blade Support Structure Assembly
22.	Left Kidney (Upper) Support Structure Assembly
23.	Left Kidney (Lower) Support Structure Assembly
24.	Left Hip Support Structure Assembly
25.	Left Thigh Support Structure Assembly
26.	Left Calf Support Structure Assembly
27.	Left Foot Support Structure Assembly
28.	Right Forearm Support Structure Assembly
29.	Right Tricep Support Structure Assembly
30.	Right Shoulder Support Structure Assembly
31.	Neck Support Structure Assembly
32.	Spine Support Structure Assembly
33.	Right Shoulder Blade Support Structure Assembly
34.	Right Kidney (Upper) Support Structure Assembly
35.	Right Kidney (Lower) Support Structure Assembly
36.	Right Hip Support Structure Assembly
37.	Right Thigh Support Structure Assembly
38.	Right Calf Support Structure Assembly
39.	Right Foot Support Structure Assembly
40.	Left Ankle Ball Joint Type 1
41.	Left Knee Ball Joint Type 1
42.	Left Hip Ball Joint Type 3
43.	Spine Ball Joint Type 1
44.	Right Ankle Ball Joint Type 1
45.	Right Knee Ball Joint Type 1
46.	Right Hip Ball Joint Type 3
47.	Right Elbow Ball Joint Type 2
48.	Right Shoulder Ball Joint Type 3
49.	Right Shoulder Blade (Lower) Ball Joint Type 1
50.	Right Shoulder Blade (Upper) Ball Joint Type 1
51.	Neck Ball Joint Type 1
52.	Left Shoulder Blade (Upper) Ball Joint Type 1
53.	Left Shoulder Ball Joint Type 3
54.	Left Shoulder Blade (Lower) Ball Joint Type 1
55.	Left Elbow Ball Joint Type 2
56.	Left Wrist Ball Joint Type 2
57.	Right Wrist Ball Joint Type 2

-continued

Parts List Assemblies
58. Left Hand Module With Monitor/screen And Keyboard
59. Right Hand Module With Mouse And Pad

[0035] Both numbered and named parts afford the user of the chair the ability to be supported substantially along the entire region of the user's body. In accordance with the principles of the present invention, sensors are disposed throughout the chair to pick up signals from various regions of the user's body. The following Sensor/Signal Pickup per Pad Assembly list is therefore provided for reference herein:

Sensor/Signal Pickup per Pad Assembly	
1.	Left Forearm Muscle, Bone, Nerve, 02, Load, Heat, Respiration
2.	Left Tricep Muscle, Bone, Nerve, Load, NIBP, Heat
3.	Left Shoulder Blade Muscle, Bone, Nerve, Load, Heat
4.	Left Thigh Muscle, Bone, Nerve, Load, Heat
5.	Left Calf Muscle, Bone, Nerve, Load, Heat
6.	Left Foot Muscle, Bone, Nerve, Load, Heat
7.	Left Kidney Muscle, Bone, Nerve, Load, Heat
8.	Neck Muscle, Bone, Nerve, 02, Load, Heat, Respiration
9.	Spine Muscle, Bone, Nerve, Load, Heat
10.	Tail Bone Muscle, Bone Nerve, Load, Heat
11.	Right Forearm Muscle, Bone, Nerve, 02, Load, Heat, Respiration
12.	Right Tricep Muscle, Bone, Nerve, Load, NIBP, Heat
13.	Right Shoulder Blade Muscle, Bone, Nerve, Load, Heat
14.	Right Thigh Muscle, Bone, Nerve, Load, Heat
15.	Right Calf Muscle, Bone, Nerve, Load, Heat
16.	Right Foot Muscle, Bone, Nerve, Load, Heat
17.	Right Kidney Muscle, Bone, Nerve, Load, Heat

Note:
NIBP = Non-invasive Blood Pressure

[0036] Referring still to the drawings, **FIG. 1** shows the ergonomic chair **100** of the present invention. Chair **100** allows the user to be supported in a variety of adjustable positions and for various sensors to monitor the condition of the user of said chair. The chair **100** also facilitates user sensor readings and exercises that will be described below.

[0037] The primary vendor list currently known to the Applicant is as follows:

[0038] NEUROMETRIX—muscle and nerve sensors and monitoring systems;

[0039] TRANSDUCER TECHNIQUES—load cells;

[0040] MALINCKRODT INC.—02 and respiration sensors;

[0041] MINCO PRODUCTS INC.—heat sensors;

[0042] TURCK PROXIMITY SENSORS—bone proximity sensors;

[0043] MEDICAL DATA ELECTRONICS INC.—NIBP non-invasive blood pressure assembly;

[0044] SCALED COMPOSITES INC.—manufacturing, design services, development, prototyping, inspection and production;

[0045] ACROTECH—urethane products;

[0046] AMETEK—spring powered joints;

[0047] BANNER—measurement sensors;

[0048] BARKSDALE INC.—pressure transducers;

[0049] Beldon—universal joints;

[0050] BORDON PRODUCTS INC.—capactive, inductive sensors;

[0051] COMPOSITES HORIZONS—composites;

[0052] CURTIS UNIVERSAL—universal joints;

[0053] E-A-R COMPOSITES—composites;

[0054] E G & G SENSORS—electro-sensors;

[0055] ELECTRO SENSORS—electro-sensors;

[0056] ENDEVCO—motion control;

[0057] IMO DELVAVAL—pressure transducers;

[0058] INTERNATIONAL BELLOWS—bellows;

[0059] INTERNATIONAL POLYMER ENG.—materials, polymers;

[0060] ITW SWITCHES—switches;

[0061] JOHANSON—electronic composites, CPCITTORS;

[0062] JAMECO ELECTRONICS COMPANY—electronic components;

[0063] JANICKI—machine design;

[0064] KAFUS—composites;

[0065] KAMAN—electro-sensors;

[0066] KOA SPEER ELECTRONICS—electronic components;

[0067] LAUREN—materials, polymers;

[0068] L-COM—connective products;

[0069] LEMO USA—electro-component connectors

[0070] LMI SELCOM—laser measurement

[0071] MAXTEK INC.—electronic comp. connectors

[0072] MICRO-EPSILON—electro-sensors;

[0073] MICRO PLASTICS—materials;

[0074] MILL-MAX MFG. CO.—electro-comp. pins term.

[0075] MONROE MFG. CO.—Elecro-comp. cable

[0076] MORS/ASC COMPONENTS—elec. comp. switches

[0077] NYLTITE—plastic inserts

[0078] OMEGA—hardware pres. temp.

[0079] PICO ELECTRONICS—elec. comp. micro-mini

[0080] PLEXUS—adhesives

[0081] Plymouth tubing—tubing

[0082] PROTECH—transducers

[0083] QUATECH—data aquisition

[0084] RECTUS—elec. comp. connectors

[0085] REMKE—connectors

[0086] RENBRANDT INC.—hardware, flex couplings

[0087] RJS PRECISION EXTRUSIONS—custom extrusions

[0088] SELCO—elec. comp. thermostatic

[0089] SENSO TECH—transducers

[0090] SERVOMETER—elec. components., mini bellows

[0091] SETRA—transducers/press

[0092] SHIGMA INC.—Elec. comp. switches

[0093] SIE SENSORS—electro-sensors

[0094] STAUBLI—connectors

[0095] TAPEMARK—elec. components, RF-EMi Shield

[0096] TEDEA HUNTLEIGH—load cells

[0097] TRANTER—heat transfer

[0098] TRONTECH AMPLIFIERS—elec. comps. amps

[0099] TRU-CONNECTOR CO.—elec. connectors

[0100] UDT SENSORS INC.—sensors

[0101] UEI DATA ACQUISITION—data acquisition

[0102] UNIMEASURE—transducer

[0103] U.S. MFG. CO.—joint products

[0104] WARNER ELECTRIC—electronic components

[0105] **FIG. 2** illustrates the ball joint assemblies displaying the principles of construction of the present invention, while **FIG. 3** illustrates the ball joint assemblies from a side-elevational view. **FIG. 4** is a front elevational view of the chair assembly of the present invention showing the seating pad assemblies displaying the principles of construction. **FIG. 5A** is a rear elevational view of the chair assembly showing the support structure assemblies and the ball joint assemblies constructed in accordance with the principles of the present invention. **FIG. 5B** illustrates an enlarged, detailed view of the mounting points of the seating pad assemblies and support structure assemblies therefor. The various elements have been numbered with the prefix letter A before them for purposes of distinction from the parts list originally set forth. Element **A1** is the main support structure, while element **A2** is the support structure cover. Element **A3** is the thermal conductive outer cover pad, while element **A4** is the sensor for muscle, bone, nerve, O2 or load. Element **A5** is the seating pad skeletal structure with threaded insert, while element **A6** is the protective boot. Element **A7** is a large washer for the spring seat, while element **A8** is the small washer for the spring seat. Element **A9** is the mounting post which, in this particular configuration, is threaded, while element **A10** is a small gauge spring. Element **A11** is a large gauge spring, while element **A12** is a locking pin. Element **A13** is a large rubber grommet, while element **A14** is a small rubber grommet. Element **A15** is a connector for the sensor wire bundle. The position of the sensor wire is therein shown, leading to the sensor **A4** of _____.

[0106] Referring now to FIGS. **7-19**, the various aspects of sensor pad locations are therein shown and described with sufficient specificity for this discussion.

[0107] **FIG. 20** is a block or flow diagram of the equipment configuration showing the sensors where the signal is picked up. The signal quality check may occur through an oscilloscope, while recoding is provided with a main computer.

[0108] **FIG. 21** illustrates a side view of the left hand module with a monitor screen assembly, along with a key board therein illustrated.

[0109] **FIG. 22** is a view from the seated position looking forward to the left hand module, with the monitor and the keyboard in the right hand module with the mousepad.

[0110] The following information pertains to the ball joints and the description therein.

[0111] Ball Joint Description

[0112] The Type 1 Ball Joint shown herein is an adjustable single axis ball joint that is capable of resistance via the use of a manual tension spring, i.e. an adjustment knob which can lock at any setting of weight (0 lbs to 50 lbs) and/or angle (0 to 270) along one axis. Mounted inline. The Type 1 Ball Joint operates to address movement of the following body joints: Left ankle **(40)**, left knee **(41)**, spine **(43)**, right ankle **(44)**, right knee **(45)**, right shoulder blade lower **(49)**, right shoulder blade upper **(50)**, neck **(51)**, left shoulder blade upper **(52)**, left shoulder blade lower **(54)**.

[0113] Type 2 Ball Joint is an adjustable dual axis ball joint that is capable of resistance via the use of a manual tension spring, i.e. an adjustment knob which can lock at any setting of weight (0 lbs to 50 lbs) and/or angle (0 to 270) along two axis and is mounted inline. The Type 2 Ball Joint operates to address movement of the following body joints: Right elbow **(47)**, left elbow **(55)**, left wrist **(56)**, right wrist **(57)**.

[0114] Type 3 Ball Joint is an adjustable dual axis ball joint that is capable of resistance via the use of a manual tension spring, i.e. an adjustment knob which can lock at any setting of weight (0 lbs to 50 lbs) and/or angle (0 to 270) along two axis, and is mounted at 90 degrees. Type 3 Ball Joint operates in conjunction with the following body joints: left hip **(42)**, right hip **(46)**, right shoulder **(48)** left shoulder **(53)**.

[0115] Manually adjusted ball joints can also be remotely operated.

[0116] Attention is now directed to the hand module. The hand module is an interchangeable type which can be used on the right or left arm support structure. The hand module is capable of supporting any combination of the following attachable accessories: monitor/screen, joy stick, mouse/ball, light pen/tablet, full keyboard, split/½ keyboard, monitor mounting bracket and a universal support bracket. The hand module has an adjustable universal bracket to hold the monitor/screen on the right or left side. The hand module also has a universal bracket to hold other attachments and accessories. The hand module also has subminiature connectors (1 monitor/screen, 1 joy stick) and 3 bayonet connectors (1 keyboard, 1 mouse/ball, 1 (light pen).

[0117] The hand module is self contained, in as much as the entire module with attachments and accessories can simply be plugged into the right or left forearm support structure, utilizing mounting brackets an applicable connectors.

[0118] The present invention allows for the receipt, processing and sending of the signals from the various sensors to the computer shown. These steps can be accomplished in several ways.

[0119] If using a remote computer and monitor/screen, the procedure is as follows: the signals from all of the sensors (muscle, bone, nerve, 02 and load) are picked up by the sensors in their assigned locations and forwarded to each respective preamp, then to the amplifiers and filters, then to the signal processor, then to an a-d converter, then to the wireless transmitter. The signal from the NIBP (non-invasive blood pressure) is processed at the same location as the processing of the sensor signals and then to the wireless transmitter. The signals from the accessories (keyboard, joy stick, mouse and pad and light pen and tablet) are processed at the same location as all other signals and then to the wireless transmitter. From the wireless transmitter the processed data is transmitted to a wireless receiver attached to the remote computer.

[0120] If using a computer built into the chair, the procedure is as follows: the signals from all of the sensors (muscle, bone, nerve, 02 and load) are picked up by the sensors in their assigned locations and forwarded to each respective preamp, then to the amplifiers and filters, then to the signal processor in the main computer. The signal from the NIBP (non-invasive blood pressure) is then processed in the main computer. All other signals from all accessories (monitor/screen, keyboard, joy stick, mouse and pad and light pen and tablet) are then processed in the main computer.

[0121] It may be seen that the chair **100** of the present invention affords the user a variety of sensor types and sensor locations, with the possibility of shape memory alloys and the aspect of body heat activation. It may be seen that the arms may move both vertically, as well as horizontally, and the chair allows manipulation at each joint. With such a chair **100**, there may be biofeedback control systems and software that facilitate the healing of injuries to the user. The ability also exists to retrofit old chairs, using the teachings of the present invention and or to design new chairs with adjustable rests, in addition to those shown herein. Sensors may also be built directly into the keyboard shown.

[0122] In operation, a large number of benefits can be afforded the user. Certain businesses can also benefit from this improvement. It is known that insurance companies cannot follow all claims. Moreover, insurers cannot be sure if, in fact, individuals filing claims are doing what they should or should not be doing. Studies based upon what people need to do with regard to musculoskeletal problems have been undertaken, and it has been reported that not everyone in the work force made the appropriate claim and/or defined the correct problem to the insurer. The invention embodied in Chair **100** comprises a way to detect an "overload factor" on the person sitting the chair. It is this location where certain problems lie and, in fact, the chair of the present invention again assists companies as well as the user in combatting problems by having an awareness of conditions which the chair is designed to monitor. With sensors placed in the proper location to measure the amount of pressure that a human body produces and that sensor providing that information through a computer, the appropriate feedback and corrective steps can be taken. For example, if the user is not sitting up properly, the computer can remind the user that he or she is not sitting correctly in the chair. If it is known what position aggravates carpal tunnel syndrome, that position can be detected by the chair and the computer screen can also report back that specific problems are beginning to occur and that the position of the user needs to be adjusted. In that regard, insurance companies can then also monitor the progress of the user and/or comment to the fact the user is not addressing the problem correctly. This could lead to increased productivity as well as health benefits.

[0123] It may thus be seen that a variety of sensors could be utilized in accordance with the principles of the present invention. Likewise, various modifications of the chair design can be incorporated without deviating from the spirit and scope of the present invention. Since many exercises can be done in a chair, and a chair of the present invention may facilitate such exercises, yet another aspect of the present invention could include performing various rehabilitation exercises that the chair would monitor and record. These and other advantages of the present invention may be more fully set forth in various embodiments of the present invention.

1. A chair assembly to facilitate healing, comprising:

(a) a frame supporting the users entire body;

(b) means for adjusting portions of said frame both vertically and horizontally

(c) means to allow the user to perform resistance exercises

(d) a plurality of sensors to pick-up signals from various regions of the users body

(e) a computer to analyze and document the users data and to suggest modifications to the frame adjustments

2. A chair assembly to facilitate healing, recited in claim 1, wherein the frame adjusts via adjustable ball joints which operate in conjunction with the users body joints. The frame, in conjunction with interchangeable hand modules, attachments, and accessories, allows for resistance exercises via use of manual tension springs. Contoured pads mounted along the frame contain a plurality of sensors to pick up signals from various regions of the users body including muscle, bone, nerve, O2, and load.

* * * * *