Dec. 15, 1964 R. M. PINE ETAL 3,161,335

BURSTER

Filed July 19, 1962 6 Sheets-Sheet 1

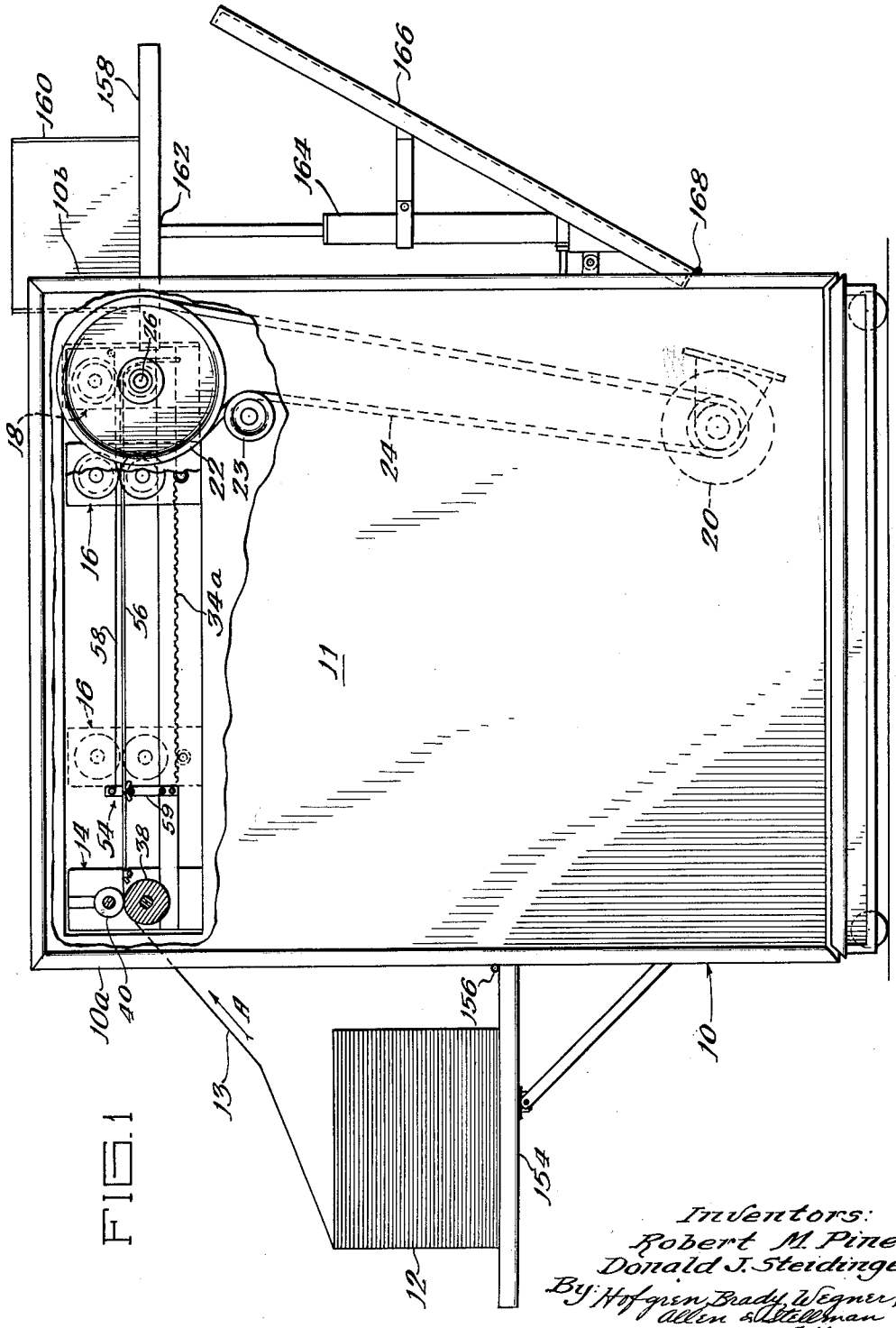

FIG. 1

Inventors:
Robert M. Pine
Donald J. Steidinger
By: Hofgren, Brady, Wegner, Allen & Stellman
Attorneys

Dec. 15, 1964 R. M. PINE ETAL 3,161,335

BURSTER

Filed July 19, 1962 6 Sheets-Sheet 2

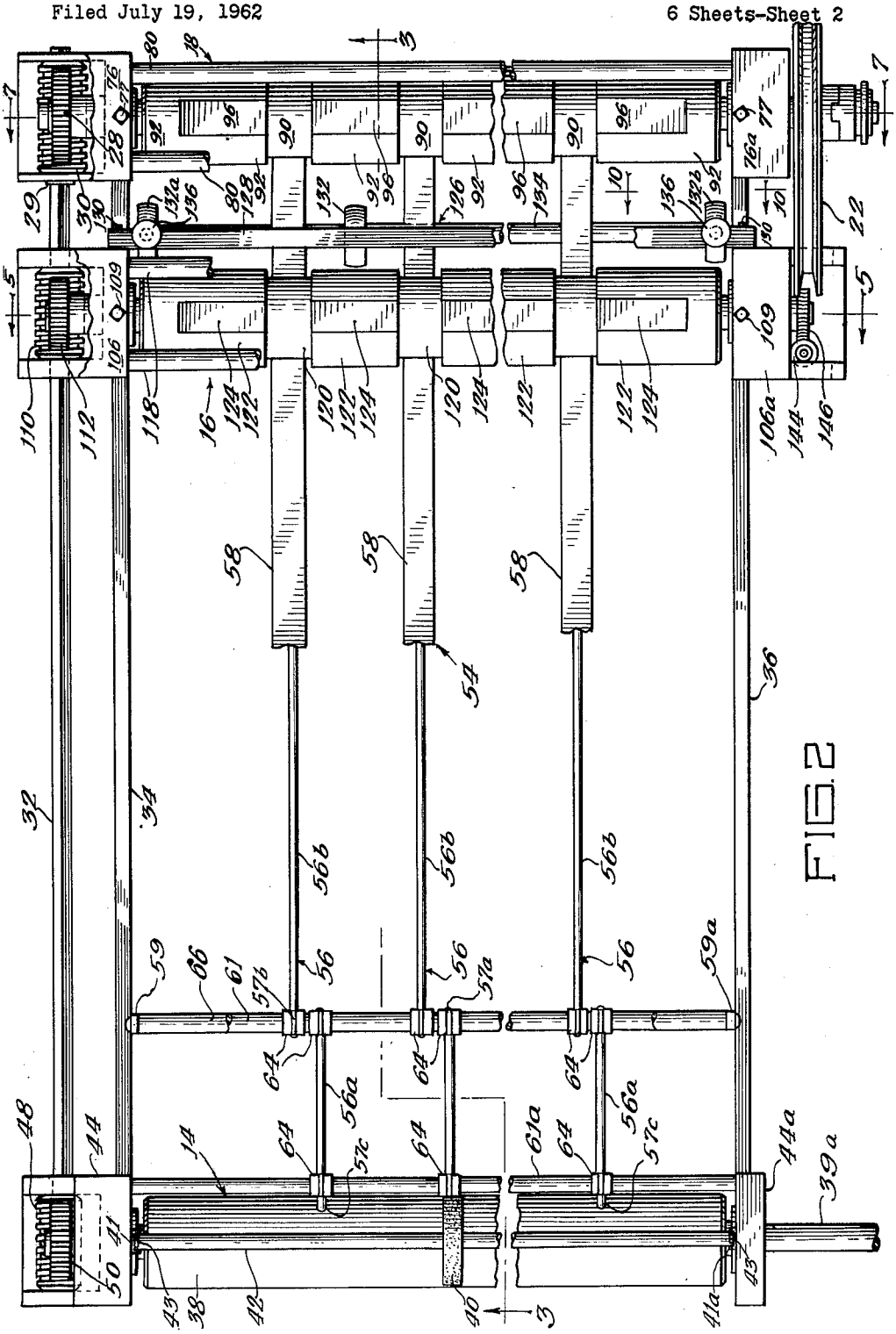

FIG. 2

Dec. 15, 1964 R. M. PINE ETAL 3,161,335

BURSTER

Filed July 19, 1962 6 Sheets-Sheet 3

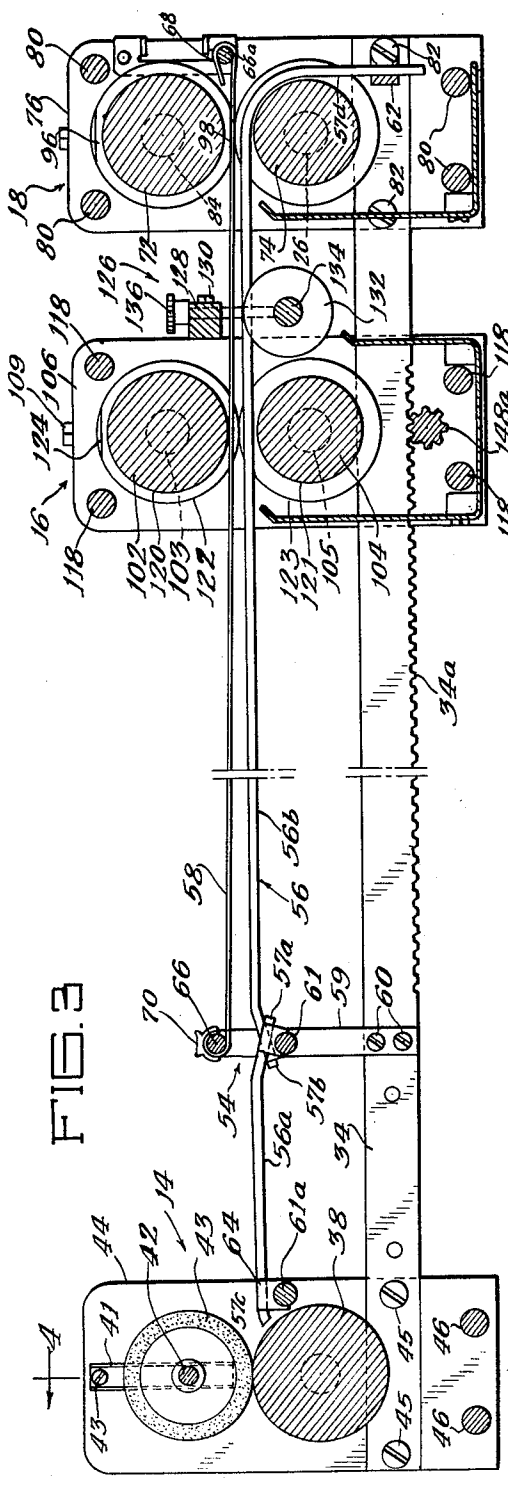

FIG. 3

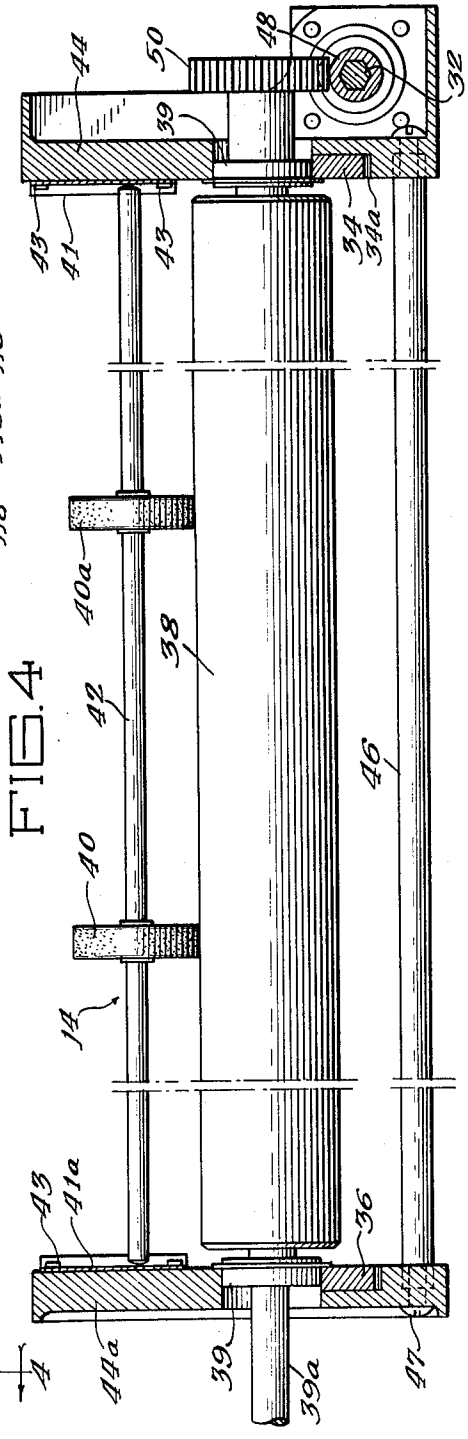

FIG. 4

Dec. 15, 1964 R. M. PINE ETAL 3,161,335

BURSTER

Filed July 19, 1962 6 Sheets-Sheet 4

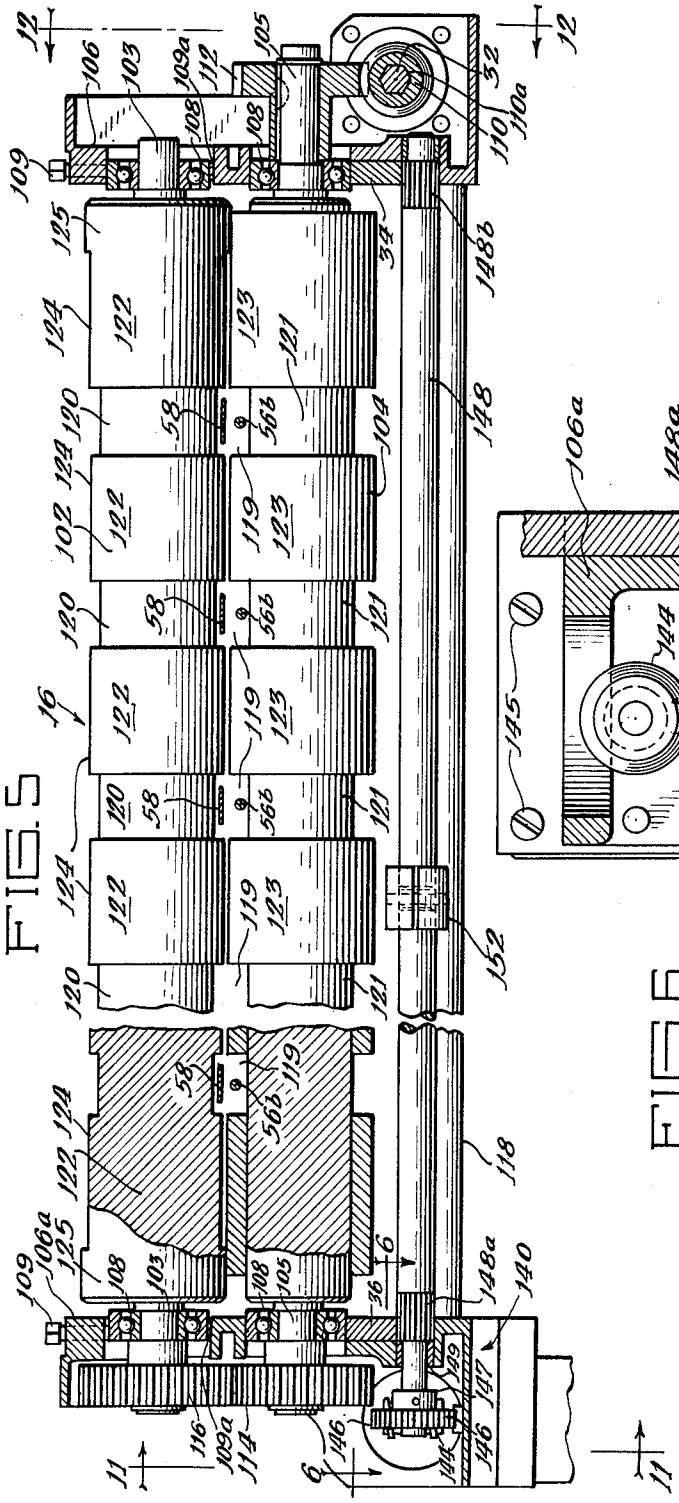

FIG. 5

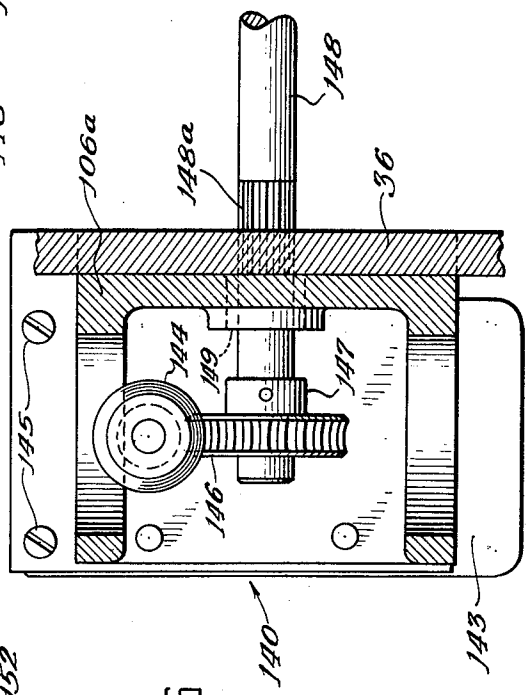

FIG. 6

Dec. 15, 1964 R. M. PINE ETAL 3,161,335

BURSTER

Filed July 19, 1962 6 Sheets-Sheet 5

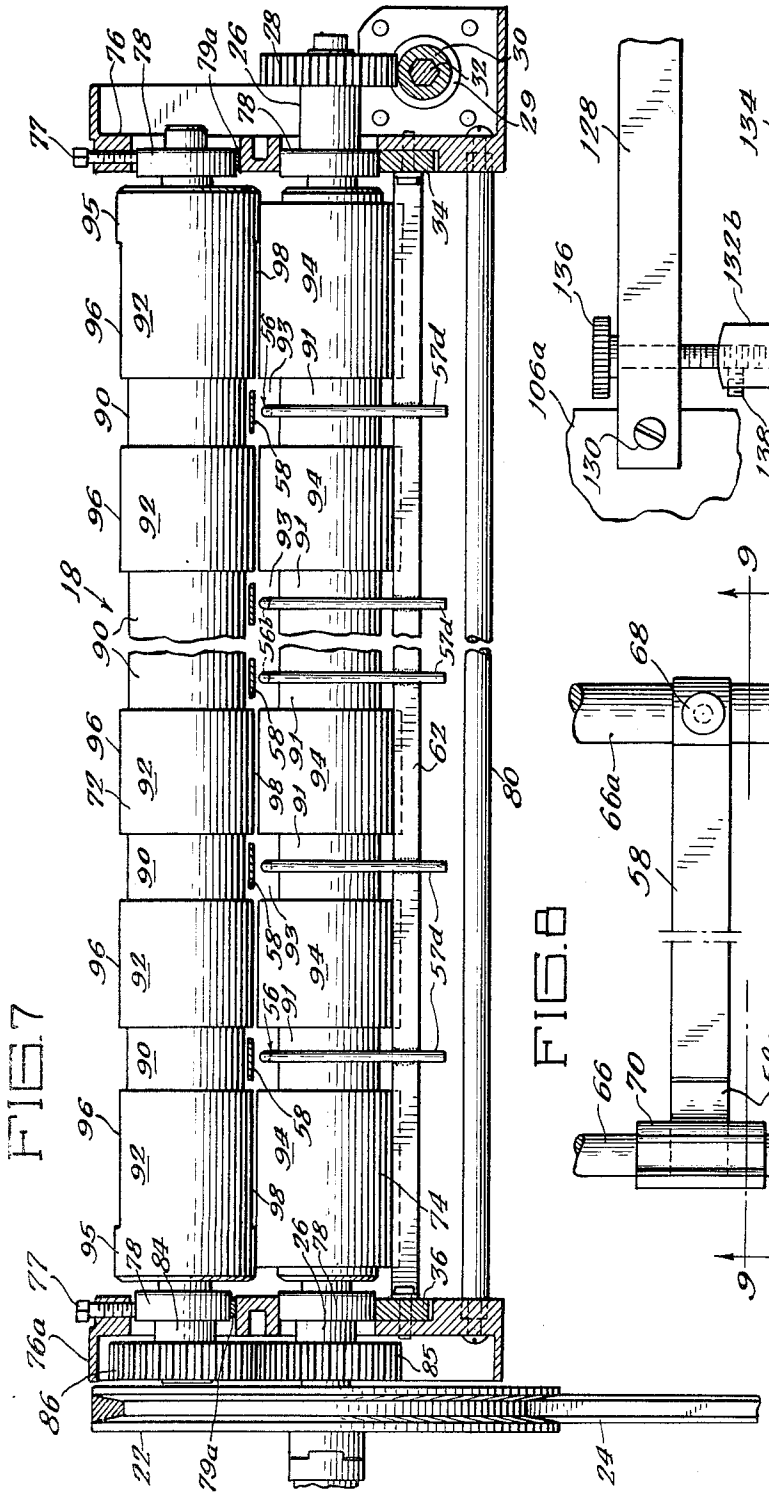

FIG. 7

FIG. 8

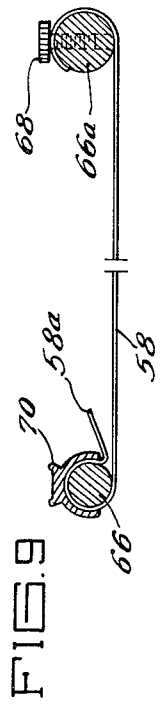

FIG. 9

FIG. 10

Dec. 15, 1964 R. M. PINE ETAL 3,161,335

BURSTER

Filed July 19, 1962 6 Sheets-Sheet 6

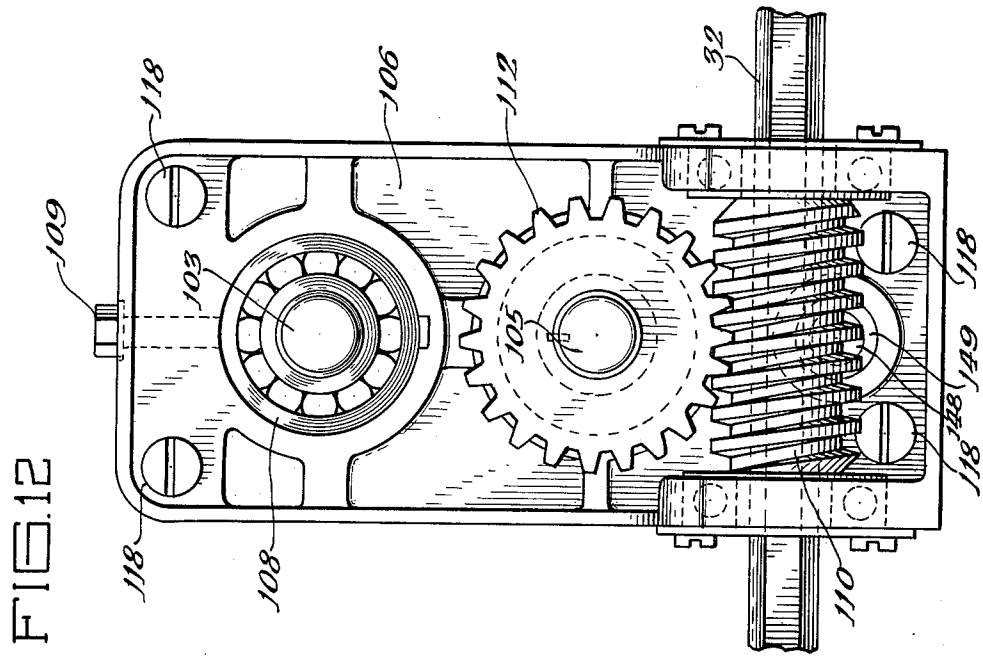

FIG. 12

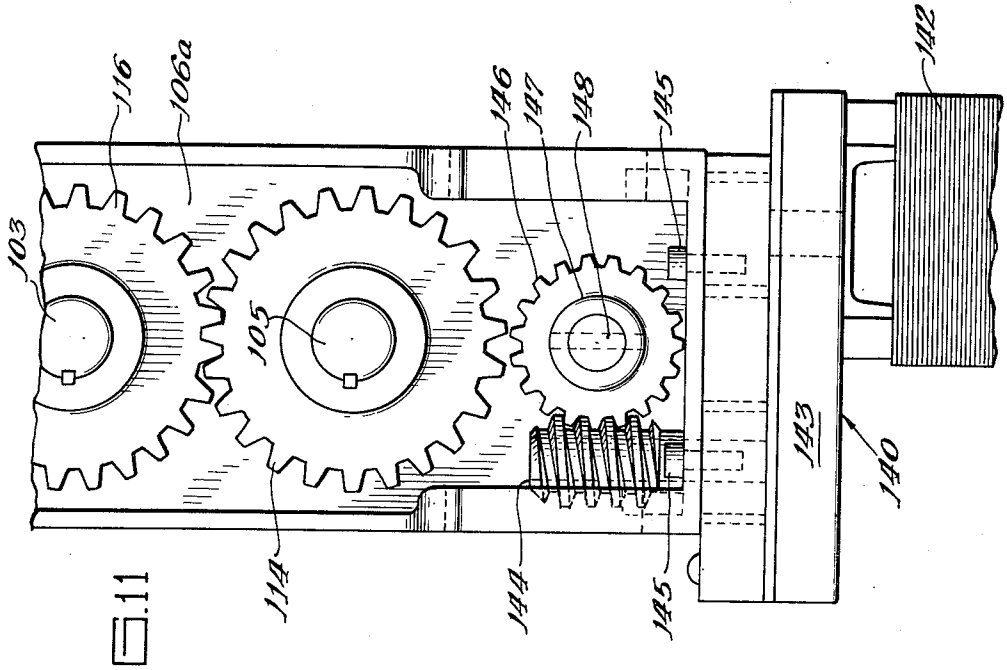

FIG. 11

United States Patent Office 3,161,335 Patented Dec. 15, 1964

3,161,335

BURSTER

Robert M. Pine, Chicago, and Donald J. Steidinger, Clarendon Hills, Ill., assignors to Uarco, Incorporated, a corporation of Illinois

Filed July 19, 1962, Ser. No. 210,982
10 Claims. (Cl. 225—100)

This invention relates to mechanisms for processing continuous form stationery and more particularly to a device for separating continuous form stationery into individual form lengths.

A problem currently present in machines for bursting continuous form stationery into individual form lengths is the tendency of the stationery being fed through the burster to "buckle," jam or tend to travel a nonlinear path through the burster machine. The transverse lines of weakening in such stationery tend to complicate the problem. Much difficulty has been encountered when attempting to run at relatively high speeds particularly since the common method of driving stationery through a burster is by frictional engagement between two vertically spaced pairs of cooperating rollers running at different speeds in order to separate the form lengths from the balance of the strip.

In those bursters where "flats" or other recesses have been formed on driving rollers in an attempt to allow stationery to pass freely between the rollers periodically, there has been a tendency for an uneven rate of paper feed to result since the faster rolls may be feeding the strip at the time the slower rolls release their grip on the strip. Uneven feeding will also cause buckles and ripples in the stationery surface and give rise to possible creasing of the stationery and jamming of the machine.

It is therefore an object of this invention to provide a new and improved burster device.

It is another object of this invention to provide a new and improved burster wherein the stationery is urged without gripping to follow a generally linear path throughout the device.

It is another object of this invention to provide a new and improved burster wherein the vertical movement of the stationery is limited throughout the entire path of travel of the stationery through the machine without impeding the horizontal flow of the stationery.

It is yet another object of this invention to provide a new and improved burster wherein the continuous strip of stationery is fed through the first pair of burster rolls at a uniform rate of travel.

Another object is to provide a novel arrangement in the cooperating pairs of rolls of a stationery burster for causing the pairs of rolls to release a driving relation with the stationery in a predetermined timed relation.

It is a further object of this invention to provide a new and improved burster having an intermediate roller unit horizontally adjustable with relation to a fixed position rear roller unit to vary space between the bights of the roller units for various form lengths of stationery.

It is still a further object of this invention to provide a new and improved burster wherein the intermediate roller unit is horizontally adjustable in the line of paper travel and self-locking at any preselected position.

It is a yet further object of this invention to provide a new and improved burster wherein a rear roller unit is fixed in position in the burster and a roller of the rear roller unit has a plurality of longitudinal flats formed thereon, and the intermediate roller unit is horizontally adjustable in the direction of paper travel and self-locking in any adjusted position, and a roller of the intermediate roller unit also has a plurality of longitudinal flats, and the intermediate roller unit is driven at a reduced speed relative to the rear roller unit in such a fashion that whenever the intermediate roller unit is out of gripping contact with the stationery, the individual rollers of the rear roller unit are also out of contact with the stationery.

Other objects, features, and advantages of the present invention will be readily apparent from the following description of the preferred embodiment illustrated in the accompanying drawings, in which:

FIGURE 1 is a broken side elevational view partially diagrammatic of a burster mechanism embodying this invention;

FIGURE 2 is a broken, enlarged top elevational view of a portion of the device of FIGURE 1 with parts removed for clarity of illustration;

FIGURE 3 is an upright section view taken along the line 3—3 of FIGURE 2;

FIGURE 4 is a section view taken along the line 4—4 of FIGURE 3 through the feed-in mechanism;

FIGURE 5 is a section view taken along the line 5—5 of FIGURE 2 through the first pair of cooperating burster rolls;

FIGURE 6 is a section view taken along the line 6—6 of FIGURE 5;

FIGURE 7 is a section view taken along the line 7—7 of FIGURE 2 through the second pair of cooperating burster rolls;

FIGURE 8 is an enlarged fragmentary view of a portion of FIGURE 2 illustrating a portion of the stationery guiding means;

FIGURE 9 is a section view taken along the line 9—9 of FIGURE 8;

FIGURE 10 is a fragmentary section view taken along the line 10—10 of FIGURE 3 showing a part of the breaker roll assembly;

FIGURE 11 is an enlarged fragmentary view taken along the line 11—11 of FIGURE 5 through a portion of the adjusting means for the burster rolls shown in FIGURE 5; and

FIGURE 12 is an enlarged view of the structure shown in FIGURE 11 taken along the line 12—12 of FIGURE 5.

As shown in FIGURE 1, the burster mechanism 10 of this invention is included in a frame 11 of generally box-like configuration. The burster is adapted to receive a zig-zag folded stack 12 of continuous form stationery 13 at its front end 10*a* and means are provided for driving the stationery in the direction indicated by the arrow A in FIGURE 1. The stationery is fed through the front infeed roller unit 14 and driven through an intermediate roller unit 16 and rear roller unit 18 which mutually cooperate to separate or "burst" the continuous form stationery into individual form lengths by separating it along its transverse lines of weakening. The individual form lengths are then ejected at the rear 10*b* of the burster.

Mounted within the frame 11 and shown in phantom outline in FIGURE 1 are a motor 20 and belt 24 which mutually cooperate to drive a pulley wheel 22, the belt passing by an idler 23 which acts to suitably adjust the tension of the belt. The pulley 22 is secured to one end of the lower rear roller shaft 26 which is part of the rear roller unit 18. Roller shaft 26 extends across the path of travel of the stationery and is spaced therebelow. As shown in FIGURE 7, at the other end of the shaft 26 there is a spur gear 28 mounted coaxially with shaft 26 and having a plurality of radially outwardly projecting teeth. The spur gear 28 is in meshing engagement with a worm 30 mounted on a driven shaft 32 of generally hexagonal peripheral configuration which extends in the direction of paper travel or transverse to the longitudinal extent of the shaft 26. The driven shaft 32 is journalled for rotation in a sleeve 29 which is fitted in a housing member 76 which forms one side of the rear roller unit 18. The gear 28 and

worm 30 are so designed that the gear may drive the worm, and therefore the shaft 32, when the shaft 26 is rotated by the pulley 22 in response to actuation from the motor 20. Also extending in the direction of paper travel and generally parallel to the driven shaft 32 are a pair of securing and traversing members or racks 34 and 36. These racks are so positioned in the burster as to be spaced from either edge of the stationery 13 and therefore lie outside of the path of stationery travel. As will be explained later, they secure the roller units 14, 16 and 18 in the burster as well as permitting linear movement of the unit 16 in the line of paper travel.

As shown in FIGURES 2, 3 and 4 the front infeed roller unit 14 consists of a lower circular cylindrical driven roller 38 of hard material, such as steel, mounted on a shaft 39*a* below the line of paper travel and extending thereacross. A pair of relatively narrow rubber wheels 40 and 40*a* are rotatably mounted together with a shaft 42 spaced above the shaft 39*a* and above the line of paper travel so that portions of the periphery of the rollers 40 and 40*a* are in contact with the portions of the periphery of the driven roller 38 for providing driven infeed means for stationery entering the burster between roller 38 and wheels 40 and 40*a*. The wheels rotate by virtue of the contact with moving stationery on the roller 38. The shaft 42 is mounted for limited vertical movement in a pair of slots 41 and 41*a* secured by appropriate means, such as screws 43, to housing members 44 and 44*a* at each end of the shaft 42. By mounting the shaft 42 for limited vertical movement the upper roller wheels 40 and 40*a* may respond to non-horizontal surface portions of the stationery 13, such as are caused by creases or by the transverse lines of weakening, by being vertically displaced without limiting the flow of paper infeed and thereby aiding constant paper speed into the burster.

Tie rods, such as 46, join the housing members 44 and 44*a* to form the unit 14. Each housing member is secured to the racks 34 and 36 by appropriate means, such as screws 45, to secure the unit in the burster at a fixed position. The shaft 39*a* which mounts the roller 38 is journalled for rotation in the housings by means of bearings 39. Mounted at one end of the shaft 39*a* and outside the housing 44 is a worm wheel 50 which in turn is in operational meshing engagement with the infeed worm gear 48 secured to the driven shaft 32. The rotation of the driven shaft 32, and therefore the worm 48, drives the roller 38 by means of the worm wheel 50, in a direction to feed the paper to the bursting rolls.

Extending in the direction of paper flow and mounted above and below the line of paper travel are the spaced support means or paper guide means 54. Support means 54 includes a plurality of rigid elongated metal rods 56 laterally spaced from each other and comprising two separate sections 56*a* and 56*b*. Also included in support means 54 are a plurality of vertical deflecting means or tapes or strips 58 of resilient flexible material, such as mylar, vertically spaced above each rod. As the stationery 13 travels through the burster it maintains a generally line contact tangent to the periphery of the rods 56*a* and 56*b*. The vertically spaced mylar strips 58 dampen vertical movement of the stationery 13 without limiting horizontal movement thereof. Thus the spaced support means 54 forms a paper guiding channel which aids the flow of paper through the machine and also promotes constant feeding thereof.

Extending generally normal to the racks 34 and 36 and secured thereto by means such as screws 60, are the upstanding securing bar mounts 59 and 59*a*. Positioned on the mounts 59 and 59*a* and extending across the path of travel of the stationery and spaced therebelow is the rod securing bar 61 to which the rear ends 57*a* of the rods 56*a* and the front ends 57*b* of the rods 56*b* are secured by removable means, such as clamps 64. Extending transversely across the rear of the front infeed unit 14 and below the line of stationery travel is the rod securing bar 61*a* to which the front ends 57*c* of the rods 56*a* are secured by the clamp 64. The rear end 57*d* of the rod 56*b* is downturned in a direction generally normal to the longitudinal extent of the rod 56*b* and rests against the rear rod securing means 62 which extends across the rear roller unit 18. Thus the stationery is provided with a base support throughout the length of its travel through the burster after leaving the infeed roller unit 14. The rear strip securing bar 66*a* extends across the rear roller unit 18 behind the rollers therein for securing the strip 58 thereto by means such as a screw 68 as shown in FIGURE 8. This provides the stationery 13 with a vertical deflection means from the point of the upstanding mounts 59 throughout the remainder of the path of travel of the stationery through the burster. The strips 58 are secured to the bar 66 by means of a removable clamp 70 with the free end portion 58*a* extending out as shown in FIGURE 9. The clamp 70 permits the tape to be secured to the bar 66 but allows the tape to be adjusted for tension. By pulling the free end 58*a* the tape 58 will decrease in length between bars 66 and 66*a* and therefore increase in tension and the clamp 70 will retain the tape in the position of increased tension with out permitting slippage thereof. By pulling on the portion of the tape between the bars 66 and 66*a* the end 58*a* will slip in the opposite direction and the tape will decrease in tension. Thus the tape 58 may be adjusted for tension to increase or decrease its dampening effect on stationery passing between the tape 58 and the rod 56.

The rear roller unit 18 includes an upper drive roller 72 above the path of stationery travel and a lower drive roller 74 below the path of stationery travel. The rollers 72 and 74 extend transverse to the direction of paper travel and are journalled for rotation in bearings 78 which are mounted in the housings 76 and 76*a* laterally spaced from the path of stationery travel. The lower roller 74 is mounted on the shaft 26 which receives the driving force from the motor 20 by means of a pulley 22 and transfers the driving force to the driven shaft 32 by means of the worm wheel 28 and the worm 30. The upper roller 72 is mounted on the shaft 84 in bearings 78 resting upon springs 77*a* holding the shaft up against adjusting screws 77 which project downwardly therein against the mountings 78. Tie rods 80 extend between the housing member 76 and 76*a* to form a unitary structure. The housing members 76 and 76*a* are secured to the racks 34 and 36, respectively, by appropriate means, such as screws 82, to position the rear outfeed roller unit in the burster. Coaxially journalled on the shaft 26 at the same end as the pulley 22 is a drive transfer spur gear 85 which meshes with the drive receiving spur gear 86 mounted on shaft 84 and is vertically aligned therewith for driving the upper roller 72 at the same peripheral speed as the lower roller 74.

Rollers 72 and 74 have circumferentially relieved areas such as 90 and 91, respectively, which form enlarged passages 93 through which the strips 58 and the ends 57*d* of the rods 56*d* may pass without interfering with the rotation of the rolls. Rollers 72 and 74 have circumferential area 92 and 94, respectively, which are normally in peripheral surface contact as shown at 95 in FIGURE 7 for rearward feeding of separated stationery passed therebetween. However, the roller 72 is provided with a series of longitudinally extending flat or recesses 96 and 98 which are formed on the circumferential areas 92 thereby periodically forming a gap between the periphery of the roller 72 and the periphery of the roller 74. This space allows stationery to pass between the rollers without being driven thereby for a brief interval until the flat portion is rotated past the area of normal peripheral contact with the roller 74. Due to the timing of the gaps in the rollers 72 and 74 with the gaps in the intermediate roller (unit 16), the rear roller unit does

not influence the rate of stationery feed into the infeed unit 14 and/or the roller unit 16.

The intermediate or first burster roller unit 16 includes an upper roller 102 positioned above the path of paper travel and mounted on a shaft 103 extending transverse to the line of paper travel, and a lower roller 104 positioned below the path of paper travel and mounted on a shaft 105 parallel to shaft 103. Each end of the shafts is journaled for rotation in bearings 108 fitted in the housing members 106 and 106*a* and carried by a spring 109*a* opposed to adjusting screws 109.

Tie rods 118 pass between the housing members 106 and 106*a* to secure them into a single unit. The upper roller 102 is positioned in the housing by means of vertically extending screws 109 which pass through the housing and against the bearings 108 at the ends of the shafts 103. The shaft 105 has a drive receiving worm wheel 112 mounted coaxially thereon at the end adjacent the driven shaft 32 for cooperating with the worm 110 on the shaft 32 to receive the driving force therefrom for driving the roller 104. At the end of the shaft 105 opposite the gear 112 there is a drive transferring spur gear 114 which cooperates with the vertically aligned drive receiving spur gear 116 mounted on the end of the shaft 103 to transmit the driving force to the upper roller 102 and drive the lower and upper rollers at a common peripheral speed. The ratio of the gear teeth on the gear 112 and the worm 110 is such that the rollers 104 and 102 are driven at half the speed of the rollers 72 and 74 in the unit 18 for a purpose to be explained later.

The rollers 102 and 104 have circumferentially relieved areas 120 and 121, respectively, which form enlarged openings 119 therebetween to allow the passage of the strips 58 and the rods 56*b* therethrough. The rollers 102 and 104 also possess circumferential areas 122 and 123, respectively, which are closely spaced from each other to drive paper therebetween without interfering with slight ripples or bubbles in the surface of the paper. At the ends of the roller 102 there are non-relieved areas 125 which are and remain in peripheral contact with areas 123 of the roller 104. The roller 102 possesses one longitudinally extending series of flats or recesses 124 on the areas 122. Because the rollers in the roller unit 16 are driven at half the speed of the rollers in the roller unit 18, the flats 124 on the roller 102 may be originally set and thereafter will always be opposite the periphery of the roller 104 when either the flats 96 or 98 of the roller 72 are opposite the periphery of the roller 74. Thus one per every revolution of the rollers 102 and 104 and twice per every revolution of the rollers 72 and 74 there will be a period of time when the stationery is not being driven by either the roller units 16 or 18. This lack of driving engagement between the rollers and the stationery permits any vertical misalignment of the stationery, such as surface buildups in front of the rollers or bubbles or other irregularities, to be smoothed out while maintaining a constant rate of paper feed, thereby aiding the continuous, even flow of the stationery through the mechanism.

Secured at the rear of the unit 16 between the roller units 16 and 18 is a stationery breaker means 126. Breaker means 126 includes a mounting bar 128 extending transverse to the direction of paper travel and mounted thereabove on the housing 106 and 106*a* by mounting screws 130. Spaced below the line of paper travel is a rotatable breaker roller shaft 134 which has a plurality of breaker rollers 132 mounted thereon for manual movement longitudinally thereof. The rollers 132 are so mounted so that portions of their peripheries extend slightly above the line of paper travel causing the paper to be deflected slightly vertically upward at this point. This vertical deflection causes an increase in tension of the stationery over the breaker when the stationery is taut and as the transverse line of weakening passes this point the driving engagement of the rear roller unit 18 will cause the stationery to be torn progressively evenly along that line creating the "burst" or separation of the individual form lengths from the remainder of the continuous form stationery. The separated form is then thrust rearwardly out of the burster by the rear roller unit 18. As shown in FIGURE 10, the end rollers, such as 132*b*, located at either end of the shaft 134 and outside the line of paper travel are adapted to receive a roller receiving and adjusting screw 136 which descends downwardly from the mounting bar 128 into the roller 132*b*. A similar construction, not shown, is found at the opposite end for roller 132*a*. Thus the breaker roller shaft 134 is secured to the mounting bar 128 by means of these screws 136 passing into the end rollers 132*a* and 132*b*. The screws 136 also serve the function of adjusting the vertical position of the shaft 134, and therefore the breaker rollers 132 thereon, which is accomplished by turning the screw 136 clockwise or counterclockwise to raise or lower the bar 134 relative to the stationery. The securing and adjusting screw 136 is frictionally bound in a preselected position by means of the pressure exerting screw 138 which extends into the end rollers generally normal to the screw 136 and in abutting relation thereto. Loosening the set screw 138 frees the securing and adjusting screw for repositioning, and tightening the set screw 138 locks the securing and adjusting screw 136 in the desired position.

Also positioned on the roller unit 16 is the intermediate roller unit positioning and locking means 140. Means 140 is positioned on the unit outside the path of stationery travel and on the same side of the burster as is the pulley 22. Included in the means 140 is a motor 142 which is secured to a motor frame 143 fastened below the housing 106*a* by means, such as bolts 145. The motor 142 is operatively connected by conventional gearing means with a worm 144 which has its longitudinal axis vertically positioned generally normal to the rack 36. The worm 144 is in operable meshing engagement with pinion gear 146, the axis of which is generally parallel with the axis of the rollers 102 and 104 of the unit 16. By means of gear hub 147, the gear 146 is mounted at one end of a driving rod 148 which extends across the unit 16 transverse to the direction of paper flow and substantially parallel to and below the rollers 102 and 104. The driving rod 148 has two free ends, 148*a* and 148*b*, which operably mesh with the toothed surfaces of the racks, such as 34*a*, for moving the roller unit 16 horizontally along the length of the racks 34 and 36, and therefore in the line of paper travel, in response to actuation from the motor 142 transmitted through the worm 144 to the gear 146. The rod 148 is journalled for rotation in sleeves, such as 149, formed in the housing members. It may be desirable to form the rod 148 of two sections for easy insertion and removal and in such cases a rod splicing sleeve 152 is provided for unifying the two elements of the rod 148 into one.

The intermediate worm gear 110 is adapted for lateral movement relative to the driven shaft 32. This is accomplished by providing the worm 110 with an interior configuration for mating with the hexagonal peripheral configuration of the driven shaft 32, permitting the worm to slide relative to the shaft 32 but adapting it to receive and transmit rotational movement imparted to it by the shaft 32. By so constructing the worm 110 the roller unit 16 may be moved horizontally along the line of paper travel by the aid of the positioning means 140 without turning the rollers 102 and 104 and therefore without interfering with the timed relationship between the longitudinal flats 124 of the roller 122 in unit 16 and the flats 96 and 98 of the roller 72 in unit 18. Furthermore, because the worm of the positioning means 140 is mounted on the shaft of the motor 142 and adapted to drive the gear 146 the positioning means 140 is self-locking due to the fact that the gear is not capable of turning the worm in response to external actuation, such as machine vibration, manual pressure or the like. Thus the roller unit 16 may be

horizontally positioned along the length of the rack between preconstructed limits, such as the mounting bar **59**, and an appropriate distance from the rear unit **18**, and when traversed to the desired position the unit will be automatically locked in that position. Also, due to the fact that the vertically adjustable breaker means is secured to unit **16** this affords a horizontal adjustment for the breaker means.

As shown in FIGURE 1, the burster unit is provided with a front shelf **154** which is secured to the burster by hinges **156** so that the shelf **154** may be folded up and become a part of the front wall of the burster when not in use. A rear shelf **158** for receiving the separate individual form lengths of stationery is provided with removable paper guides **160** to define lateral limits of the stack of individual form lengths received on the shelf **158**. The shelf **158** is mounted at **162** to the vertical adjusting means **164** which is a part of the rear door **166**. The door **166** is mounted on the burster by hinges **168** so that it may be swung about the hinges and form a part of the back wall of the burster when its associated apparatus is not in use. Prior to closing the rear door **166** the paper guides are removed from the shelf **158** and the shelf is lowered. The vertical adjusting means **164** is lowered an appropraite distance so the components of the door **166** may be received in the interior of the burster without interference when the door **166** is closed.

This new and improved burster will urge the stationery being fed therethrough in a vertically limited linear path. The provision for the resilient stationery deflecting strips throughout the run of the stationery through the machine retains the stationery within a given vertical limit so that no significant "buckling" will occur. Moreover, this is accomplished without hindering the horizontal progress of the stationery through the burster. Also, this burster maintains a constant rate of paper feed by having the flat portion of the front and rear bursting rollers timed. This insures that the rear bursting roller will not influence the rate of stationery feed and thus serves to eliminate the problem of uneven feed as a factor in burster operation. The two pairs of bursting rolls may be positioned a distance apart for various different form or ticket lengths of stationery by manual control of the electric motor for moving the intermediate set of rollers. Adjustment may be made while bursting is going on should slight movement of the intermediate rollers be desirable. Some adjustment may be indicated should the cross lines of weakening not coincide with the crest of the breaker rolls, for example. It is preferred that the entire upper end of the burster including the area encompassing the feed-in rollers to the stationery last set of burster rolls be enclosable. A hinged cover, not shown, of transparent material may be lowered over the top of the rolls during most operations. There is no need to insert one's hands about the burster rolls for feeding the stationery initially since the feed-in rolls and guides accomplish the feeding. Some access may be needed for adjusting tension in the paper guide strips or for adjusting the breaker roll height or location so that any cover is preferably hinged for convenient opening. A transparent cover also serves for carrying indicia indicating position of the intermediate burster rolls for forms of different lengths.

The foregoing description has been given for the clearness of understanding only and no unnecessary limitations should be understood therefrom for some modifications will be obvious to those skilled in the art.

We claim:

1. A bursting machine for bursting continuous forms of stationery into form lengths between transverse lines of weakening, comprising: a frame, a first pair of driven coacting rollers in said frame, said first pair of driven rollers having surfaces normally in contact with a plurality of longitudinally extending recesses and being geared together for rotation in a common peripheral rate; a driven shaft operatively associated with said first pair of rollers and extending perpendicular to the longitudinal axis of said rollers; a second pair of coacting rollers operatively associated with said driven shaft and driven at a reduced speed relative to said first rollers, said second pair of rollers also having surfaces normally in contact and also geared together for rotation at a common peripheral speed, said second pair of rollers also having a plurality of longitudinally extending recesses of a number which in relation to the number of flats of said first pair of rollers equals the ratio of the speed between the two pairs of rollers; a plurality of spaced stationery supports, said spaced supports including a plurality of rods having their longitudinal extent extending in the direction of stationery travel and being in line contact with the underside of the stationery, said supports also including a flexible strip superposed above said rods and being held at each end in spaced relation to the rods, said flexible strip being adjustable in effective length therebetween with intermediate portions thereof flexible to allow the member to rise and fall in relation to the rods to urge the stationery towards the rods but not limit the travel of stationery through the bursting machine.

2. The device of claim 1 wherein said supports extend through both sets of coacting rollers, one set of which is movable in the direction of paper travel.

3. The device of claim 1 wherein the ends of said supports are held at a point beyond the extent of movement of the said rollers.

4. The device of claim 1 wherein said supports run continuously through both sets of rollers, the flexible member being tape which is held at one end to a bar by means allowing the tape to be adjusted in tension.

5. A bursting machine for bursting continuous form stationery into form lengths between transverse lines of weakening, comprising: a first pair of driven coacting rollers in said frame, said first pair of driven rollers having surfaces normally in contact with the plurality of longitudinally extending recesses and being geared together for rotation in a common peripheral rate; a driven shaft operatively associated with said first pair of rollers and extending perpendicular to the longitudinal axis of said roller; a second pair of coacting rollers operatively associated with said driven shaft and driven at a reduced speed relative to the first rollers, said second pair of rollers also having surfaces normally in contact and also geared together for rotation at a common peripheral speed, said second pair of rollers also having a plurality of longitudinally extending recesses of a number which in relation to the number of recesses in the first pair of rollers equals the ratio of the speed between the two rollers; and positioning and locking means for moving said second pair of rollers in preselected positions along the line of stationery travel through the machine and automatically locking said second pair of rollers in said selected positions simultaneously with the cessation of movement thereof.

6. The device of claim 5 wherein said second pair of rollers is movable in the direction of paper travel and said rollers have at least one longitudinally extending recess in timed relationship to the first roller recesses; and said second pair of roller is operatively associated with said driven shaft so that the timed relationship between the first and second roller recesses is maintained upon movement of said second pair of rollers in the direction of paper travel.

7. A bursting machine for bursting continuous form stationery into form lengths between transverse lines of weakening, comprising: a frame, a first pair of driven coacting rollers in said frame, said first pair of driven rollers mounted transverse to the path of paper flow and having surfaces normally in contact with a plurality of longitudinally extending recesses and being geared together for rotation at a common peripheral rate; a driven shaft operatively associated with said first pair of rollers and extending perpendicular to the longitudinal axis of said

rollers; a second pair of coacting rollers parallel to said first rollers operatively associated with said driven shaft to be driven at a reduced speed relative to said first rollers, said second pair of rollers also having surfaces normally in contact and also geared together for rotation at a common peripheral speed, said second pair of rollers also having a plurality of longitudinally extending recesses of a number which, in relation to the number of recesses of said first pair of rollers, is a ratio equal to the ratio of the speed between the two rollers; a rack extending in the direction of paper travel; positioning and locking means for moving said second pair of rollers in preselected positions along the line of stationery travel and automatically locking said second pair of rollers in said selected positions simultaneously with the cessation of movement thereof, said means including a motor on said second pair of driven rollers and a pinion gear driven by said motor and in engagement with said rack to move said second pair of rollers in the direction of paper travel in response to actuation from said motor.

8. The device of claim 7 wherein said pinion gear is driven by said motor by means of a worm gear so that said second pair of rollers is self-locking when positioned at any point along the longitudinal extent of said rack.

9. The device of claim 7 wherein said second pair of rollers is movable as a unit in the direction of paper travel; and said second pair of rollers is operatively associated with said driven shaft by means of a worm gear collar slidable longitudinally on said shaft without turning the shaft so that movement of said rollers along said shaft will not turn the worm gear and therefore the timed relationship between said first and second pair of rollers is maintained upon movement of the second pair of rollers in the direction of paper travel.

10. The device of claim 1 wherein said second pair of rollers is movable as a unit in the direction of paper travel; and said second pair of rollers is operatively associated with said driven shaft by means of a worm gear collar slidable longitudinally on said shaft without turning about the shaft so that movement of said rollers along said shaft will not turn the worm gear and therefore the timed relationship between said first and second pairs of rollers, is maintained upon movement of the second pair of rollers in the direction of paper travel.

References Cited in the file of this patent

UNITED STATES PATENTS

2,344,720	O'Connell	Mar. 21, 1944
2,375,542	Euth	May 8, 1945
2,380,949	Davidson	Aug. 7, 1945
2,513,093	Hageman	June 27, 1950
2,899,871	Auer	Aug. 18, 1959