(12) INTERNATIONAL APPLICATION PUBLISHED UNDER THE PATENT COOPERATION TREATY (PCT)

(19) World Intellectual Property Organization
International Bureau

(43) International Publication Date
2 February 2012 (02.02.2012)

PCT

(10) International Publication Number
WO 2012/013190 A3

(51) International Patent Classification:
A47B 9/20 (2006.01)

(21) International Application Number:
PCT/DK2011/000088

(22) International Filing Date:
29 July 2011 (29.07.2011)

(25) Filing Language: Danish

(26) Publication Language: English

(30) Priority Data:
PA 2010 00688 29 July 2010 (29.07.2010) DK

(71) Applicant *(for all designated States except US)*: **LINAK A/S** [DK/DK]; Smedevaenget 8, Guderup, DK-6430 Nordborg (DK).

(72) Inventors; and
(75) Inventors/Applicants *(for US only)*: **LORENZEN, Kurt** [DK/DK]; Nejstled 4, DK-6310 Broager (DK). **RIIS, Martin** [DK/DK]; Kyshøj 12, DK-6470 Sydals (DK).

(81) Designated States *(unless otherwise indicated, for every kind of national protection available)*: AE, AG, AL, AM, AO, AT, AU, AZ, BA, BB, BG, BH, BR, BW, BY, BZ, CA, CH, CL, CN, CO, CR, CU, CZ, DE, DK, DM, DO, DZ, EC, EE, EG, ES, FI, GB, GD, GE, GH, GM, GT, HN, HR, HU, ID, IL, IN, IS, JP, KE, KG, KM, KN, KP, KR, KZ, LA, LC, LK, LR, LS, LT, LU, LY, MA, MD, ME, MG, MK, MN, MW, MX, MY, MZ, NA, NG, NI, NO, NZ, OM, PE, PG, PH, PL, PT, RO, RS, RU, SC, SD, SE, SG, SK, SL, SM, ST, SV, SY, TH, TJ, TM, TN, TR, TT, TZ, UA, UG, US, UZ, VC, VN, ZA, ZM, ZW.

(84) Designated States *(unless otherwise indicated, for every kind of regional protection available)*: ARIPO (BW, GH, GM, KE, LR, LS, MW, MZ, NA, SD, SL, SZ, TZ, UG, ZM, ZW), Eurasian (AM, AZ, BY, KG, KZ, MD, RU, TJ, TM), European (AL, AT, BE, BG, CH, CY, CZ, DE, DK, EE, ES, FI, FR, GB, GR, HR, HU, IE, IS, IT, LT, LU, LV, MC, MK, MT, NL, NO, PL, PT, RO, RS, SE, SI, SK, SM, TR), OAPI (BF, BJ, CF, CG, CI, CM, GA, GN, GQ, GW, ML, MR, NE, SN, TD, TG).

Published:

— *with international search report (Art. 21(3))*

— *before the expiration of the time limit for amending the claims and to be republished in the event of receipt of amendments (Rule 48.2(h))*

(88) Date of publication of the international search report:
15 March 2012

(54) Title: LIFTING COLUMN PREFERABLY FOR HEIGHT-ADJUSTABLE TABLES

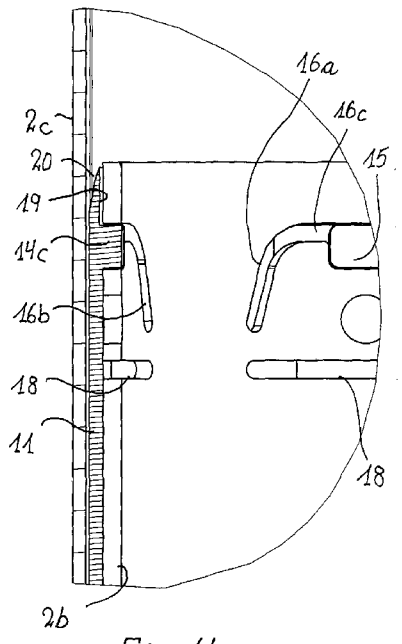

Fig. 11

(57) Abstract: Lifting column, preferably for height adjustable tables, said lifting column comprising at least two relative to each other telescopically arranged members (2a, 2b, 2c). At least one slider (11) is arranged between the two members (2a, 2b, 2c), said slider being secured to one of the members (2b). The problem is play between the members (2a, 2b, 2c), resulting in an unstable lifting column. For solution of this problem the member (2b) to which the slider (11) is secured, is furnished with a resilient section (17) outlined by a groove (16,18) against which at least a part of the slider (11) rests. The resilient section (17) can push the slider (11) into firm engagement against the two members (2b, 2c), at which a stable lifting column which is free from play is achieved.

WO 2012/013190 A3

INTERNATIONAL SEARCH REPORT

International application No
PCT/DK2011/000088

A. CLASSIFICATION OF SUBJECT MATTER
INV. A47B9/20
ADD.

According to International Patent Classification (IPC) or to both national classification and IPC

B. FIELDS SEARCHED

Minimum documentation searched (classification system followed by classification symbols)
A47B A47C B23Q F16B B66C

Documentation searched other than minimum documentation to the extent that such documents are included in the fields searched

Electronic data base consulted during the international search (name of data base and, where practical, search terms used)
EPO-Internal

C. DOCUMENTS CONSIDERED TO BE RELEVANT

Category*	Citation of document, with indication, where appropriate, of the relevant passages	Relevant to claim No.
X	DE 20 2008 000628 U1 (OELSCHLAEGER METALLTECHNIK GMB [DE]) 10 April 2008 (2008-04-10) the whole document	1-5,7, 9-12,14, 15,20
A	DE 10 2007 050632 A1 (RK ROSE & KRIEGER GMBH VERBIND [DE]) 30 April 2009 (2009-04-30) figures 1-7b	1-20
A	WO 02/063996 A1 (ROL ERGONOMIC AB JACO VERKEN [SE]; SKEPOE HAAKAN [SE]) 22 August 2002 (2002-08-22) cited in the application figures 1-5	1-20

☐ Further documents are listed in the continuation of Box C.

☒ See patent family annex.

* Special categories of cited documents :

"A" document defining the general state of the art which is not considered to be of particular relevance

"E" earlier document but published on or after the international filing date

"L" document which may throw doubts on priority claim(s) or which is cited to establish the publication date of another citation or other special reason (as specified)

"O" document referring to an oral disclosure, use, exhibition or other means

"P" document published prior to the international filing date but later than the priority date claimed

"T" later document published after the international filing date or priority date and not in conflict with the application but cited to understand the principle or theory underlying the invention

"X" document of particular relevance; the claimed invention cannot be considered novel or cannot be considered to involve an inventive step when the document is taken alone

"Y" document of particular relevance; the claimed invention cannot be considered to involve an inventive step when the document is combined with one or more other such documents, such combination being obvious to a person skilled in the art.

"&" document member of the same patent family

Date of the actual completion of the international search	Date of mailing of the international search report
12 January 2012	23/01/2012

Name and mailing address of the ISA/	Authorized officer
European Patent Office, P.B. 5818 Patentlaan 2 NL - 2280 HV Rijswijk Tel. (+31-70) 340-2040, Fax: (+31-70) 340-3016	Vehrer, Zsolt

INTERNATIONAL SEARCH REPORT

Information on patent family members

International application No
PCT/DK2011/000088

Patent document cited in search report	Publication date	Patent family member(s)	Publication date
DE 202008000628 U1	10-04-2008	DE 202008000628 U1	10-04-2008
		EP 2080447 A1	22-07-2009
DE 102007050632 A1	30-04-2009	NONE	
WO 02063996 A1	22-08-2002	EP 1359825 A1	12-11-2003
		SE 0100423 A	13-08-2002
		WO 02063996 A1	22-08-2002