(12) INTERNATIONAL APPLICATION PUBLISHED UNDER THE PATENT COOPERATION TREATY (PCT)

(19) World Intellectual Property Organization
International Bureau

(43) International Publication Date
04 February 2021 (04.02.2021)

WIPO | PCT

(10) International Publication Number
WO 2021/018793 A1

(51) International Patent Classification:
F16L 1/16 (2006.01) *B65G 1/04* (2006.01)
B63B 35/03 (2006.01) *B66C 1/66* (2006.01)
B65H 75/42 (2006.01) *E21B 19/14* (2006.01)
F16L 1/19 (2006.01) *E21B 19/15* (2006.01)
F16L 1/20 (2006.01)

(21) International Application Number:
PCT/EP2020/071031

(22) International Filing Date:
24 July 2020 (24.07.2020)

(25) Filing Language: English

(26) Publication Language: English

(30) Priority Data:
2023579 26 July 2019 (26.07.2019) NL

(71) Applicant: **ITREC B.V.** [NL/NL]; 2, Admiraal Trompstraat, 3115 HH SCHIEDAM (NL).

(72) Inventors: **DONKERS, Jeroen Adrianus Joseph**; c/o 2, Admiraal Trompstraat, 3115 HH SCHIEDAM (NL).
VEHMEIJER, Terence Willem August; c/o 2, Admiraal Trompstraat, 3115 HH SCHIEDAM (NL).

(74) Agent: **EP&C**; P.O. Box 3241, 2280 GE Rijswijk (NL).

(81) Designated States *(unless otherwise indicated, for every kind of national protection available)*: AE, AG, AL, AM, AO, AT, AU, AZ, BA, BB, BG, BH, BN, BR, BW, BY, BZ, CA, CH, CL, CN, CO, CR, CU, CZ, DE, DJ, DK, DM, DO, DZ, EC, EE, EG, ES, FI, GB, GD, GE, GH, GM, GT, HN, HR, HU, ID, IL, IN, IR, IS, IT, JO, JP, KE, KG, KH, KN, KP, KR, KW, KZ, LA, LC, LK, LR, LS, LU, LY, MA, MD, ME, MG, MK, MN, MW, MX, MY, MZ, NA, NG, NI, NO, NZ, OM, PA, PE, PG, PH, PL, PT, QA, RO, RS, RU, RW, SA, SC, SD, SE, SG, SK, SL, ST, SV, SY, TH, TJ, TM, TN, TR, TT, TZ, UA, UG, US, UZ, VC, VN, WS, ZA, ZM, ZW.

(84) Designated States *(unless otherwise indicated, for every kind of regional protection available)*: ARIPO (BW, GH, GM, KE, LR, LS, MW, MZ, NA, RW, SD, SL, ST, SZ, TZ,

(54) Title: APPARATUS AND A METHOD FOR TRANSPORTING AND STORING TUBULARS

Fig. 1

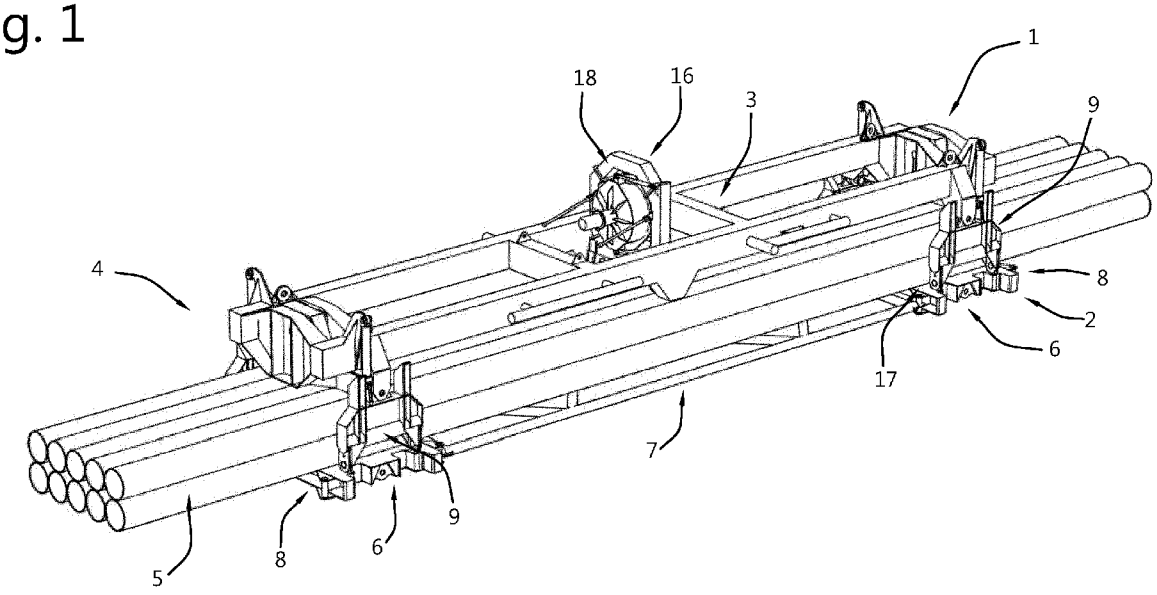

(57) Abstract: The invention relates to a pipe sections transport and storage assembly for transporting and storing pipe sections. The assembly comprises a storage crate for storage of pipe sections, and a crate top section for in combination with the storage crate defining a box like transport crate. The storage crate comprises two U-shaped support frames and a spacer frame for releasable connecting the support frames. The crate top section is configured for releasable connecting the support frames, to thus, in combination with the two pipe sections support frames and the pipe sections spacer frame, define a box like transport crate. The top section comprises one or more mounts for coupling the top section with a crane, to enable the pipe section transport crate to be lifted by the crane.

WO 2021/018793 A1

[Continued on next page]

UG, ZM, ZW), Eurasian (AM, AZ, BY, KG, KZ, RU, TJ, TM), European (AL, AT, BE, BG, CH, CY, CZ, DE, DK, EE, ES, FI, FR, GB, GR, HR, HU, IE, IS, IT, LT, LU, LV, MC, MK, MT, NL, NO, PL, PT, RO, RS, SE, SI, SK, SM, TR), OAPI (BF, BJ, CF, CG, CI, CM, GA, GN, GQ, GW, KM, ML, MR, NE, SN, TD, TG).

Published:

— *with international search report (Art. 21(3))*

Title: apparatus and a method for transporting and storing tubulars

FIELD OF THE INVENTION

The present invention relates an apparatus and a method for transporting and storing tubulars.

More in particular, a first aspect of the invention relates to the transport of pipe sections, in particular of pipe sections comprising one or more tubulars, to be used on offshore pipe lay vessels, in particular J-lay vessels.

Because of the very high costs associated with the rental and running of pipe lay rigs more effort is expended on finding ways to reduce the time consumed by each operation. With pipe lay vessels, multiple tubulars are welded into a pipe string, i.e. string of tubulars, which pipe is subsequently launched into see along a firing line. The combining of tubulars and launching of the pipe line is a semi continuous process. A pipe is welded to the string of already launched tubulars, the welded connection is coated, and the pipe is launched along a firing line into the sea.

In order to reduce the time involved with this process, it is proposed to combine tubulars into pipe sections on shore, and combine these pipe sections into a pipe string on the off shore vessel. Thus, the welding to be done on the vessel is reduced, which allows for a quicker pipe lay process. To enable this proposed process, the comparatively large pipe sections have to be transported, e.g. to be lifted on board the vessel.

However, these long pipe sections require large size transport crates, which are voluminous and heavy. Thus, the containers would take up a significant amount of the pay load of the vessel, and therefore preferably are left on shore. Leaving the transport crates on shore requires the vessel to be provided with racks for stacking the pipe sections, and furthermore requires the pipe sections to be transferred one by one from the crates into the racks.

It is an object of a first aspect of the invention to provide an alternative pipe sections transport crate suitable for transporting relatively long pipe sections. It is a further object of the first aspect of the invention, to provide a pipe sections transport crate in which the above mentioned drawbacks are eliminated altogether or occur in a greatly reduced extent. In

particular it is an object of the first aspect of the invention to provide a compact pipe sections transport crate, that preferably allows for compact storage of the crate when not in use. It Is yet another object of the invention to provide a compact pipe sections transport crate that allows for use as a pipe section storage assembly on board a vessel.

According to the present invention, this object is achieved by providing a pipe sections transport and storage assembly according to claim 1.

A pipe sections transport and storage assembly for transporting and storing pipe sections, preferably long pipe sections, according to the invention comprises a storage crate for storage of pipe sections, and a crate top section for in combination with the storage crate defining a box like transport crate, the transport crate having sufficient rigidity to enable transport of the pipe sections,

wherein the storage crate comprises:

- two pipe sections support frames, the pipe section support frames each comprising a floor section and two lateral support sections, wherein the floor sections have a support surface for supporting tubulars stored in the storage crate and wherein the lateral support sections in a support position extend perpendicular to the floor section, such that the floor section and the lateral support sections together define a U-shaped support frame for holding a bundle of pipe sections; and
- a spacer frame, releasable connecting the pipe sections support frames at a distance for supporting long pipe sections, preferably releasable connecting the floor sections below the tubular support surface;

wherein the crate top section is configured for releasable connecting the support frames, preferably for releasable connecting with the lateral support sections of the pipe sections support frames, to thus, in combination with the two pipe sections support frames and the pipe sections spacer frame, define a box like transport crate wherein preferably the spacer frame and the top section extend on opposite sides of a bundle of pipe sections held in the support frames; and

wherein the top section comprises one or more mounts for coupling the top section with a crane, to enable the pipe section transport crate to be lifted by the crane, e.g. to be lifted by a crane from a quay onto a vessel of vice versa.

The transport and storage assembly comprises a storage crate that comprises a spacer and two pipe sections support frames, wherein the spacer is releasable connected with the pipe sections support frames. Thus, when the storage crate is not used, the spacer can be released from between the support frames, and the separate components, i.e. the support frames, spacer and top section of the disassembled transport crate can be stored individually,

which allows for more compact storage compared to an assembled transport crate. For example, the support frames can be stored directly next to each other, while the spacer frame can be stacked with spacer frames of other storage crates.

It is submitted that a storage crate that can be disassembled to enable compact storage of the crate when not in use, is in particular beneficial when the storage crate is configured to storage of large pipe sections, i.e. pipe sections comprising three or more tubulars. Such transport crates are large as well, which makes them especially voluminous when it comes to storage. Furthermore, these crates have to be rigid enough to support heavy loads. According to the claimed invention, the storage crate is to be combined with a top section to provide the box like transport crate, and thus provide the storage crate with sufficient rigidity to enable transport of the transport crate, in particular when the storage crate holds a bundle of pipe sections.

The rigidity required for transport of the bundle of pipe sections is essentially provided by the top section, preferably by the top section in combination with the spacer frame wherein the top section and the spacer frame are provided on the opposite sides of the bundle of pipe sections to be transported. Because the storage crate, i.e. without the top section, does not have to provide the rigidity required for transport, it can be kept light weight and more compact.

In an embodiment, the crate allows for stacking crate one upon the other without the presence of the top section. Not stacking the top sections allows for a more compact stack. Ideally, a single top section is used with multiple storage crates. For example, a single top section can be used to enable a crane to lift multiple storage crates, one after the other, onto a lorry. When the top section is transported with the multiple storage crates to the quay of a harbor, the same top section can subsequently be used to lift the storage crates from the lorry upon a vessel.

In an embodiment, the spacer frame and the support frames are connected to each other with pin through hole connections, for example are bolted to the support frames. This allows for a simple and efficient coupling, i.e. a coupling that can be made and unmade using simple tools, and does not requires welding or similar processes.

In a preferred embodiment, the spacer frame is a flat rectangular body, having four corners at which coupling devices are provided for cooperating with coupling devices provided at the

floor sections of the support frames. This configuration allows for an efficient lay out of the spacer frame.

In a further preferred embodiment, the spacer frame is provided with for coupling devices in the form of apertures, e.g. ring shaped openings or busses, to be aligned with apertures of the coupling devices, e.g. ring shaped openings or busses, of the floor sections, through which aligned coupling devices a cylindrical body is to inserted, and secured in the inserted position, to make the coupling. Preferably, the coupling devices are configured such that the pins are to be secured with their longitudinal axis perpendicular to the support surface of the floor sections.

In an embodiment, the lateral support sections of the support frames are, at a top end thereof, configured to couple with a support frame of an other storage crate according to the invention, preferably with the floor section of the support frame of the other pipe sections storage crate, to enable stacking of support frames, and thus stacking of multiple storage crates.

Thus, in such an embodiment, the functionality for holding and supporting a bundle of pipe sections, as well as supporting other storage crate, is combined in the support frames of the storage crate, while the functionality of the spacer frame is limited to spacing the support frames. Tus, the spacer frame can be kept relatively simple and light weight.

In an embodiment, the floor sections of the support frames are configured to couple with, e.g. to fittingly engage, a support frame of another pipe sections storage crate, preferably with the top end of the lateral support sections of the support frames of the other pipe sections storage crate, to enable stacking of support frames, and thus stacking of crates.

In such an embodiment, the floor sections are provided with apertures or recesses provided in the floor section, preferably in the circumference of the floor sections, for receiving coupling teeth provided at the upper end of the support frames, preferably at a top end of the support sections. For coupling with another storage crate, the coupling teeth extend in an upward direction, i.e. perpendicular to and away from the support surface of the floor sections.

In an embodiment, the lateral support sections are provided with a support area for supporting a floor section of another storage crate. In a further embodiment, the lateral support sections are provided with a support area for supporting a floor section of another storage crate between the coupling teeth. In a further embodiment, the lateral support sections are provided with coupling devices, e.g. comprising an eye to enable a pin through

hole connections, for coupling the storage crate with another storage crate or a with a top section.

The coupling teeth may be beveled to facilitate engaging the apertures or recesses with the coupling teeth, to make the coupling teeth fittingly engage the apertures or recess of the floor section of the other crate, and thus facilitate stacking one crate on top of the other.

In a further embodiment, the floor sections have openings for receiving a top end of a lateral support of another storage crate according to the invention. In a further embodiment, the floor sections are provided with four openings provided in pairs on opposite sides of the floor section, for receiving four coupling teeth, preferably provided on a top end of the lateral support sections of the other storage crate according to the invention.

In an embodiment, between the openings, the floor sections are provided with a support tab for resting on a support area of a lateral support section of another storage crate, e.g. a support area provided between coupling teeth of the lateral support section of the other storage crate. In a further embodiment, the support tabs are provided with coupling devices, e.g. comprising a recess for receiving an eye provided on the top of a lateral support section of another storage crate, for example to enable a pin through hole connections, for coupling the storage crate with another storage crate.

In an embodiment, for each support frame, the lateral support section at one side of the floor sections is a high lateral support section, and the lateral support section on the opposite side of the floor section is a low lateral support section, and wherein the high lateral support section is configured to engage the support frame of another pipe sections storage crate at a side thereof, to facilitate positioning the other pipe sections storage crate and thus stacking of the other pipe sections support crate on top of the pipe sections support crate.

In such an embodiment, the high lateral support section, more in particular a top end of the high later support section, extends above the low lateral support section, more in particular above a top end of the low lateral support section. Thus, in such an embodiment, for each support frame one support section extends above the other support section, thus providing a guide tip for positioning and guiding a support frame of another storage crate being stacked on top of it.

In an embodiment, the lateral support sections of a support frame are each provided with a coupling tooth, preferably are each provided with coupling teeth, adapted to fittingly engage

apertures or recesses in the floor sections of another storage crate, wherein the coupling tooth, or teeth, of one lateral support is longer than the coupling tooth, or teeth, of the lateral support on the opposite side of the floor section.

In a further embodiment, the floor sections have openings for receiving the top end of a lateral support section, preferably of one or more coupling teeth provided at a top end of the lateral support, of an other storage crate by moving the floor section in a lateral direction, i.e. in a direction parallel to the support surface of the floor section, relative to the top end of the lateral support section of the other storage crate.

Providing the support frames with a lateral support configured to guide and position the support frame of another storage crate, allows for a crane drive to move a storage crate in a lateral direction, i.e. parallel to the support surface of the floor section, until the transport crate contacts the high lateral support, and to subsequently lower the transport crate onto the storage crate. Thus, the crane driver does not pas the storage crate.

This is in particular beneficial when the crates to be stacked are configured for storing and transporting long pipe sections, because thus providing these crates on one side with lateral supports for guiding another support crate, facilitates aligning the transport crate with the storage crate onto which it has to be stacked.

In an embodiment, the floor sections have a width perpendicular to a longitudinal axis of the storage crate, and the combined height of the lateral support sections is less than the width of the floor section. Thus, the lateral supports can be folded or stacked onto the floor sections and thus enables a compact configuration of the support frames for storage thereof.

In a further embodiment, the lateral support sections of the support frames are, at a bottom end thereof, hingeable connected to the floor section of the support frames, such that the lateral support sections can be folded from the support position into a transport position onto the floor section, to provide the support frames with a compact storage configuration.

In a further embodiment, the support frames are provided with securing devices, for securing the lateral support section relative to the floor section in the support position and in the transport position. In an embodiment, the floor sections and the support frames are secured relative to each other with pin through hole connections, for example are bolted in their relative positons.

In an alternative embodiment, the lateral support sections are provided with tabs that can be received in openings provided in the floor sections, to thus enable the lateral supports to be set up on the floor sections for use of the storage crate, and for the support frames to be disassembled to facilitate storage when not in use.

It is noted that in a preferred embodiment, the lateral support sections are hingeable connected with the floor sections or the lateral support sections allow for easy coupling an uncoupling of the lateral support sections with the floor sections, to facilitate storage of the crates. Preferably, the connection between the lateral support sections and the floor sections is such that the storage crate, while holding a bundle of pipe sections, can be lifted using the top sections by connecting the top section with the support sections.

Furthermore, the lateral support sections preferably are rigid frames, for example a panel composed out of sheet metal or a truss like structure. This allows for a rigid connection of the top section with the floor section via the lateral supports.

In an embodiment, the top section is provided with a vertical or upright gyro, i.e. a gyro for spinning about a horizontal axis, vertically aligned with a centre of gravity of the top section, for, when the top section is supported by a crane, stabilizing the top section, e.g. preventing unwanted pivoting of the top section about a vertical axis.
Providing the top section with a gyro allows for lifting the transport crate with a regular crane, e.g. a crane with a wire supported lifting device, without the requirement of tug lines to keep the transport crate in position.

In a further embodiment, the gyro is hingeble mounted, such that the gyro can be hinged about a horizontal axis, i.e. an axis parallel to the support surface of the floor sections of the support frames, relative to the top section, and wherein the gyro is held in the vertical position by dampers and/or can be pivoted about the horizontal axis using actuators.
In such an embodiment, tilting the gyro about the horizontal axis, and out of a vertical plane, creates a pivoting of the top section when supported by a crane. Thus, when the position of the gyro, i.e. its angle relative to a vertical plane of the gyro, is actively controlled using actuators, the orientation of the top section can be actively controlled. This can for example be used for orienting the top section while being lifted, for example while lowered onto a storage crate to be combined with said storage crate into a transport crate.

By applying passive control of the vertical positon of the gyro, i.e. by using dampers, unwanted pivoting of the top section about a vertical axis can be dampened, i.e. reduced and optimally eliminated.

In a further embodiment, the gyro is mounted in a gyro support frame, wherein the gyro can be pivoted relative to the gyro support frame about a vertical axis, and the gyro support frame can pivot about a horizontal axis relative to the top section, and wherein the gyro is held in the upright position relative to the support frame by dampers and/or can be pivoted about the horizontal axis using actuators, and the gyro support frame is held in the upright position relative to the top section by dampers and/or can be pivoted about the horizontal axis using actuators

It is submitted that in an equivalent alternative embodiment, the gyro support frame is pivotable relative to the top section about a vertical axis, and the gyro is supported in the gyro support frame such that it can pivot relative to the gyro support frame about a horizontal axis.

In such an embodiment, i.e. in which the gyro can be pivoted relative to the top section about a vertical axis and about a horizontal axis, the gyro can also be used to dampen unwanted pivoting of the top section about a horizontal axis.

In an embodiment, wherein the floor sections of the support frames are configured to couple with floor sections of another storage crate. Thus, adjacent storage crates can be coupled to provide a more solid base for stacking other storage crates upon them.
In an embodiment, the floor sections are configured to be coupled with mounts provided on a deck or in the hull of a vessel.
In such an embodiment, the storage crates can be fixed relative to the deck by securing them to the mounts on the deck.
In an embodiment, the pipe sections transport crate is configured to transport pipe sections of a length over 27m preferably the transport crate is configured to transport pipe sections of a length of 35m or more e.g. triples, i.e. a pipe section comprising three tubulars.
In an embodiment, the storage crate is configured to hold the pipe sections such that they extend beyond the support frames. In such an embodiment, the storage crate has open ends.
It is submitted that the invention allows for using a relatively light weight storage crate for storing and transporting long pipe sections. This is beneficial because using standard crates, i.e. crates comprising an enclosed storage space for holding tubulars, would become to heavy for efficient use and storage, while supporting a bundle of pipe sections and/or when not in use.

In an embodiment, the the spacer frame is a truss, preferably are a ladder truss.
In a further embodiment, the truss is provided with stands and supports, that enable the trusses to be stacked, flat, one upon the other.

Preferably, the top section functions as a lid, and connecting the top section to the lateral supports of the storage crate, to enable lifting of the storage crate, also closes off the support frames at their upper ends.
It is submitted that the top sections provide the crate with the rigidity required to enable transport of the crate by crane.
It is submitted that the crates preferably are configured to be stacked one upon the other, without the crate top section. This configuration of the pipe sections transport crates enable low stacks of crates, and thus allows for compact storage of the crates in a hull of a vessel.
It is submitted that the lateral support sections and the floor section define a pipe sections support space for holding a bundle of pipe sections between them. It is furthermore submitted that the lateral support sections preferably extend above the pipe sections support space. Thus, in such an embodiment, the top ends of the lateral support sections can be coupled with the floor sections of another storage crate.

It is submitted that as long pipe sections are considered pipe section comprising multiple, preferably three or more, tubulars.

The invention furthermore provides a transport and storage assembly according to claim 10, wherein the pipe sections transport crate can be configured for transporting short pipe sections and for transporting long pipe sections.
In an embodiment of a transport and storage assembly according to the invention, the pipe sections transport crate can be configured for transporting short pipe sections and for transporting long pipe sections,
wherein the spacer frame is a long pipe section spacer frame for releasable connecting the pipe sections support frames at a first distance for transporting long pipe sections, and
wherein the crate top section is a long crate top section that is configured for releasable connecting the support frames at the first distance, to thus, in combination with the two pipe sections support frames and the long pipe sections spacer frame, define the box like transport crate with a long pipe sections transport configuration;
wherein the transport and storage assembly further comprises:

- a short pipe sections spacer frame, for releasable connecting the pipe sections support frames at a second distance for transporting short pipe sections, preferably for releasable connecting the floor sections below the tubular support surface; and
- a short top section, wherein the short crate top section is configured for releasable connecting the support frames, preferably for connecting with the lateral support sections of the pipe sections support frames, at the second relative distance, to thus, in combination with the two pipe sections support frames and the short pipe sections spacer frame, define the box like transport crate with a short pipe sections transport configuration, and

wherein the short top section comprises one or more mounts for coupling the top section with a crane, to enable the pipe section transport crate to be lifted by the crane, e.g. to be lifted by a crane from a quay onto a vessel of vice versa.

Thus, the invention provides an alternative transport container for transporting long pipe sections.

To provide a transport crate that allows for a short pipe sections transport configuration and a long pipe sections transport configuration, and to keep that transport crate light weight, it was chosen to provide two support frames, and interchangeable spacer frames, wherein the spacer frames are used to space the support frames, and not to provide the transport crate with a structural rigidity that allows for transporting the crate. Only when the crate is provided with the top section, it can be transported, for example is being lifted by a crane.

It is submitted that the spacer frames connect the floor sections of the support frames and thus extend below a bundle of pipe sections held by the support frames. The transport crate top sections connect the support frames along a top side of the transport crate. Thus, the spacer frame and the top section of the transport crate extend in a longitudinal direction of the transport crate, and connected the support frames on opposite sides of a bundle of pipe sections held by the support frames, i.e. extend long the top side and the bottom side of the transport frame respectively. In this way they are optimal positioned for supporting bending forces caused the bundle of pipe sections when the transport crate is being transported, for example is being lifted by a crane.

Furthermore, the invention allows for adapting the crate to the size of pipe sections to be transported by changing the long spacer frame and long top section with the short spacer frame and the short top section. The support frames can be used for transporting both large pipe sections and short pipe sections, which allows for a flexible transport system. Enabling the use of long and short spacer frames and top sections allows for a providing crates that have the optimal strength and weight for transporting a particular size of pipe sections.

It is not required to use oversized crates for transporting short pipe sections, and it is not necessary to keep both large and small size crates on stock.

Thus, the invention allows for a compact and low weight transport crate, and provides an efficient way for transporting pipe sections

It is submitted that the support frames support the pipe sections, and the spacer frames do not support the pipe sections. The spacer frames connect the support frames only. It is furthermore submitted that the crate is designed to support the pipe sections away from their ends. When the crate is loaded with a bundle of pipe sections, the pipe sections extend on both sides of the transport crate.

It is submitted that the pipe sections transport crate is also suitable for transporting and storing pipe sections comprising drilling tubulars, casing tubulars, or similar drilling components, and is thus not only suitable for use on pipe lay vessels, but is also suitable for use on drilling vessels. The pipe sections transport crate allows for connecting drilling tubulars on shore, and for the relatively large pipe sections to be transported onto and stored on the offshore drilling vessel. By thus providing relatively long pipe sections, the transport crates allow for the drilling process to be sped up by reducing the number of connections, i.e. screwing tubulars together, that have to be made.

In a further embodiment, the first distance is shorter than half the second distance, preferably is less than a quarter of the second distance. Thus, the storage crates can be used with short and long pipe sections, e.g. pipe sections comprising a single tubular and pipe sections comprising three tubulars.

It is submitted that in a preferred embodiment of a transport and storage assembly comprising spacers of different length, the spacers more in particular the storage crates are configured for storage and transport of pipe sections comprising a single tubular and pipe sections comprising three tubulars, so called triples. Thus, the assembly enables enhanced pipe lay or drilling by providing triples, and in addition still allows for transport and storage of standard tubulars.

In an embodiment, the transport crate with the short pipe section transport configuration, is configured to transport pipe sections of a length of up to 15m, e.g. singles, i.e. a pipe sections comprising one tubular; and the transport crate with the long pipe sections transport

configuration, is configured to transport pipe sections of a length of 35m or more, e.g. triples, i.e. a pipe sections comprising three tubulars.

In an alternative embodiment, the transport crate with the short pipe section transport configuration, is configured to transport pipe sections of a length of up to 27m, e.g. doubles, i.e. a pipe sections comprising two tubulars and
wherein the transport crate with the long pipe sections transport configuration, is configured to transport pipe sections of a length of 35m or more, e.g. triples, i.e. a pipe sections comprising three tubulars.

The invention furthermore provides a storage crate, the storage crate comprising the two pipe sections support frames and the pipe sections spacer frame disclosed herein.
In a further embodiment, the storage crate holds a bundle of pipe sections.
In yet further embodiment, the pipe sections comprise three tubulars.
In a further embodiment, the pipe sections extend beyond the support frames.

The invention furthermore provides a transport and storage assembly comprising at least one top section as disclosed herein and multiple storage crates as disclosed herein.
The invention furthermore provides a transport and storage system, comprising pipe sections transport crates that can be configured for transporting short pipe sections and for transporting long pipe sections, the transport and storage system comprising:
- at least four pipe section support frames as disclosed herein;
- at least one short top section as disclosed herein;
- at least one long top section as disclosed herein;
- at least one short spacer frame as disclosed herein; and
- at least one long spacer frame as disclosed herein.

The invention furthermore provides an offshore vessel, e.g. a drilling vessel or a pipe lay vessel, the vessel comprising:
- a pipe sections transport and storage system as disclosed herein, preferably a transport and storage system comprising pipe sections transport crates that can be configured for transporting short pipe sections and for transporting long pipe sections, the transport and storage system comprising:
    - at least four pipe section support frames as disclosed herein;
    - at least one short top section as disclosed herein;
    - at least one long top section as disclosed herein;
    - at least one short spacer frame as disclosed herein; and

- at least one long spacer frame as disclosed herein;
- a pipe section launch installation, e.g. a drilling tower or a J-lay tower, comprising a firing line;
- a pipe section up-end device;
- a storage crate storage deck, e.g. in a storage hull, for supporting stacks of pipe sections storage crates; and
- a pipe section transport crane, for moving a pipe section from a pipe sections storage crate located at the storage crate storage deck, to the pipe section up end device.

In an embodiment of the offshore vessel, the storage deck is provided with a grid of mounts, which mounts are configured to be coupled with corresponding coupling devices provided in the floor sections of the pipe sections storage crates, to lock the storage crates in place.

In addition, or as an alternative, the storage deck is provided with a grid of mounts, which mounts are spaced for receiving floor sections between them such that they secure the floor sections, and thus the storage crates, against a sliding movement over the deck.

In an embodiment of the offshore vessel, the pipe section transport and storage system comprises at least one short spacer frame and at least one long spacer frame, and the short spacer frame and the long spacer frame are dimensioned such that the mounts of the grid can be coupled with both the floor sections of a storage crate for short pipe sections and the floor sections of a storage crate for long pipe sections.

In a further embodiment of the offshore vessel, the deck mounts are spaced for supporting adjacent rows of support crates, preferably such that creates of one row are adjacent to the crates of an other row, and preferably the floor sections of the adjacent crates are coupled.

In an embodiment, the vessel comprises support frame guide pillars, e.g. mounted on the storage deck or along a wall surface of a storage hull, which guide pillars are configured to cooperate with the support frames, more in particular with guide sections in the floor sections and/or the support sections, for engaging the support frame in a lateral direction, and guiding the engaged support frame in a vertical direction, to facilitate positioning the support frames, and thus the transport crates, while being lowered by crane onto the storage deck, and preferably correctly position the floor sections correctly relative to mounts provided on the storage deck.

Proving the vessel with such guide pillars facilitates lifting the storage crates, when in the transport configuration, onto and from the deck.

In a further embodiment, the guide pillars have a height of two or more stacked storage crates, to furthermore facilitate stocking of crates as well as placing crates on the storage deck.

The invention furthermore provides a marine J-lay pipelaying installation for use on an offshore vessel for laying an offshore pipeline on a seabed, preferably a vessel as disclosed herein, wherein the installation is configured to handle long pipe sections, more in particular to handle pipe sections comprising three tubulars; the installation comprising:

- a pipe sections transport and storage system as disclosed herein;
- a tower;
- a travelling head clamp;
- a hoisting device for the travelling head clamp, said hoisting device comprising:
    - one or more hoisting winches;
    - one or more hoisting cables driven by said one or more winches;
    - a crown block being mounted on said tower; and
    - a travelling block adapted to be lowered and lifted along the tower over a full vertical stroke between an uppermost level and a lowermost level, said travelling block carrying said travelling head clamp, wherein said travelling block is suspended from said crown block via said one or more hoisting cables,
- a hang off device, preferably a hang off clamp, adapted to support a previously launched pipeline, said hang off device being arranged at or in proximity of the lower level,
- a pipe section loader system adapted to advance a pipe section into a position in a firing line that extends in line with a previously launched pipeline supported by the hang off device,

wherein the installation is provided with a lower workstation that is arranged in proximity of the lowermost level, e.g. on a hull of the vessel or on a lower portion of the tower,
wherein the pipe section loader system is provided with a pivotal loader boom, that is pivotal about a horizontal pivot axis between a substantially horizontal loading position and a raised transfer position for upending a pipe section,
wherein the pivotal loader boom is provided with a set of pipe section grippers adapted to grip a pipe section.

In an embodiment, a marine J-lay pipelaying installation according to the invention is provided with an upper workstation that is mounted on the tower halfway between the uppermost level and the lowermost level, said upper workstation being mobile mounted on the tower between an operative position and a retracted position,

wherein the set of pipe section grippers is an upper set of pipe grippers, and wherein the pivotable loader boom is furthermore provided with a lower set of pipe grippers to grip a pipe section in line with the pipe section gripped by the upper set of pipe grippers, such that the loader boom can upend two pipe sections at the same time.

The invention furthermore provides a method for launching a string of pipe sections from an offshore vessel, e.g. a drilling vessel or a j-lay vessel, preferably a vessel as disclosed herein, the method comprising:
- storing a bundle of the pipe sections, preferably pipe sections comprising three tubulars, in a storage crate on the offshore vessel;
- lifting a pipe section from the storage crate, transporting the pipe section to an up end device, e.g. a pivotable loader boom, preferably using a crane, preferably a pipe section transport crane, and upending the pipe section to bring the pipe section into a firing line of a pipe section launch instalation , e.g. a tower for J-lay;
- connecting the pipe section to a string of pipe sections supported in the firing line; and
- lowering the string, the string comprising the connected pipe section, into the sea.

A further method according to the invention comprises the steps:
- on shore, combining multiple tubulars into a pipe sections, preferably combining three tubulars into pipe sections;
- storing the pipe sections in bundles in the storage crate on shore; and
- combining the storage crate with a top section into a transport crate, and transporting the transport crate with the bundle of the pipe sections onto the offshore vessel.

The invention furthermore provides a method for stacking a support crate as disclosed herein on top of another support crate, wherein the storage crates are provided with a high lateral support section at one side of the floor sections, and a low lateral support section on the opposite side of the floor sections, the method comprising the steps:
- combining the storage crate to be stacked upon the other storage crate with a top section into a transport crate, and lifting the transport crate with a crane;
- moving the transport crate in a lateral direction over a storage crate, such that the support frames of the transport crate engage the high lateral supports of the storage crate, and thus aligning the transport crate with the storage crate;
- lowering the transport crate on top of the storage crate; and
- uncoupling the top section from the storage crate stacked upon the other storage crate.

The invention furthermore provides a method for marine J-lay pipelaying, wherein an offshore pipeline is laid on the seabed from a vessel equipped with a marine J-lay pipelaying installation and a pipe sections transport and storage system as disclosed herein.

According to a second aspect, the present invention furthermore relates to a marine pipeline installation vessel for laying an offshore rigid pipeline on the seabed, said vessel at least being adapted to carry out the rigid reel lay method. More particularly, the present invention relates to an improved vessel and method for laying a rigid pipeline, wherein a specially configured vessel provides a hull and a deck and two vertical storage reels, each for the storage of a spooled rigid pipeline to be laid, and each rotatable about a horizontal axis of rotation, the reel rotational axis.
Reel type pipelaying vessels are typically employed in deep water situations. Such pipelaying vessels have been built by the applicant for many years now and usually include at least one vertical storage reel, a left and right reel support structure, a pipeline launch assembly comprising a pipeline guide, a straightener, tensioner and pipeline support device to be able to lay the offshore rigid pipeline into the body of water towards the floor of the body of water. See for example US2017248252.

The storage reel of the vessel according to the invention is rotatable about a horizontal reel axis and comprises a left and right vertical flange between which a hub extends, in a traverse direction. Onto the hub multiple layers, each comprising several windings of pipeline can be stored. The weight of the storage reel is typically supported by a left and right reel support structure, located on opposite sides of the reel and supporting the reel for rotation about a horizontal real rotational axis. The left and right support structures are supported by the vessel. Commonly, a storage reel drive is provided to rotate the storage reel.

A storage reel for rigid pipelines easily weighs about 700 metric tons and depending on the pipe diameter can store several kilometres of pipeline. For instance using a 25 meter diameter reel, the reel is able to store 7.5 km of pipeline with a pipe diameter of 16 inches or 80 km of pipeline with a pipe diameter of 4 inches. In total, a filled reel, i.e. a reel including pipeline to be laid, may weigh up to 2500 to 4000 metric tons.

As is common for this type of pipeline installation vessels, a pipeline launch assembly is mounted to the vessel, downstream of the reel in the direction of unspooling. The pipeline launch assembly defines a firing line, and is adapted to launch the unwound pipeline along the firing line into the sea. The pipeline launch assembly comprises a pipeline guide adapted to guide unwounded pipeline from the storage reel, over the pipeline guide, into the firing line.

The pipeline guide has an elongated pipeline guide member orientated essentially in the direction of the storage reel and providing an essentially circular or semi-circular pipeline guide surface. The unwounded pipeline contacts the pipeline guide member at a guide contact point upstream of the firing line and departs said member at a guide departure point into the firing line.

Also commonly applied when handling rigid pipelines are:
a straightener provided downstream of the storage reel in the direction of unspooling to provide straightening to the rigid pipeline.
at least one tensioner provided downstream of the pipeline guide which is adapted for engaging the pipeline in the firing line and supporting at least part of the weight of the launched pipeline to control the rate of laying of the rigid pipeline on the seabed,
a pipeline support device adapted to support the weight of the launched pipeline in the firing line.

In order to promote proper unwinding of a pipeline, also referred to as unspooling of the rigid pipeline from the storage reel to the pipeline guide, the pipeline departing angle is preferably essentially 90°, wherein the pipeline departing angle is defined by the angle between the unspooling direction of a winding of pipeline from the hub and the reel rotational axis. For a system comprising a storage reel and pipeline guide, left and right fleet angles can be defined to determine the spooling and unspooling quality of the storage reel. The left and right fleet angle are defined as the angle between a first line drawn from the guide departure point to the storage reel, perpendicular to the reel axis, and a second line drawn from the guide departure point to the left and right flange, respectively. Advantageously, the left and right fleet angles do not exceed 7.5° , preferably not larger than 5.5° . The larger the fleet angles, the poorer the spooling and unspooling, which may damage the pipeline through crushing and abrasion.

In order to increase the vessel capacity, in particular to be able to store more pipeline, in the past systems were invented comprising storage reels having a broader hub, thus capable to store more pipeline. To keep the fleet angles acceptable, the fleet angle was adjusted by allowing the pipeline guide, with the launch assembly, to translate over a distance during unspooling the pipeline from the storage reel. See e.g. patent publications US2003/0044234, US4345855 and US4687376.

An alternative solution to increase the capacity of a vessel is presented in patent publication US 6371694. Rather than increasing the dimensions of a single storage reel, here two

(relatively narrow) adjacent storage reels are provided in an angular position, the mid-planes of the wheels intersecting in the vertical longitudinal mid-plane of the vessel.

Patent publication US2017248252 discloses a set up with two storage reels, each pivotable supported. The reels are each supported by a left and a right support structure, which support structures are embodied to form a pivoting structure allowing an angular adjustment of the horizontal reel rotational axis about a vertical axis to alter the angular position of the at least one storage reel.

Publication US4687376 discloses translatable auxiliary storage reels for pipelines. These storage reels are supported on so-called 'spooling track assemblies' providing for a transverse movement of a storage reel between port and starboard positions. It is noticed that such a translation is only possible with storage reels having a relatively small width, and with reels having a smaller capacity, as can be derived e.g. from FIG. 1 of US4687376.

The aim of the present invention is to provide an alternative reel system, it is a further goal to provide a reel system that is easy to install on a vessel, more in particular allows for an easy simple vessel design.
The object of the invention is achieved by providing a marine pipe line installation vessel according to claim 38, and by providing a reel system according to claim 51.

A marine pipeline installation vessel for laying an offshore rigid pipeline in the sea, onto the seabed, according to the second aspect of the invention comprises:
a hull and a deck;
a reel system comprising:

- a first vertical storage reel and a second vertical storage wheel, each for the storage of a spooled rigid pipeline to be laid, each storage reel comprising:

-a left and right vertical flange between which a hub extends; and

-a hub onto which multiple layers of pipeline, each layer comprising several windings of pipeline, can be stored;

- a reels support structure, wherein the reels support structure is supported by the hull of the vessel, and wherein the reels support structure rotatable supporting the first storage reel and the second storage reel, such that the first reel can be rotated about a first reel rotational axis and the second reel can be rotated about a second reel rotational axis;
- a first storage reel drive and a second storage reel drive to rotate the storage reels about their respective rotational axis;

a pipeline launch assembly mounted to the vessel downstream of the reels in a direction of unspooling, which pipeline launch assembly is adapted to launch unwound pipeline along a firing line into the sea, the pipeline launch assembly comprising:
a pipeline guide having an elongated pipeline guide member orientated in the direction of the storage reels and providing a circular or semi-circular pipeline guide surface, which pipeline guide is adapted to guide pipeline unwound from the storage reels over the pipeline guide into the firing line,
a straightener provided downstream of the storage reel in the direction of unspooling to provide straightening to the rigid pipeline;
at least one tensioner provided downstream of the pipeline guide which is adapted for engaging the pipeline in the firing line and supporting at least part of the weight of the launched pipeline to control the rate of laying of the rigid pipeline on the seabed; and
a pipeline support device adapted to support the weight of the launched pipeline in the firing line,
wherein the reels support structure further comprises:
a horizontal reels support axle, the axle having an axle body extending between a first axle end and a second axle end;
a first axle support and a second axle support, located on opposite sides of the storage reels, wherein the first axle support and the second axle support support the first axle end and the second axle end respectively,
wherein the support axle is adapted to support the first storage reel and the second storage reel while said axle is supported at the axle ends only, and wherein the support axle is adapted to support the first reel and the second reel at an angle relative to each other.

A vessel according to the invention comprises a single reel storage hull, and a reel system comprising two inclined reels, wherein both reels are supported by a single reel axle, which axle spans the reel storage hull from one side to an opposite side, and which axle is supported at its outer ends.

Because the reel support axle is not supported at the section that extends between the two reels, the reels can be positioned closely adjacent to each other, end the heel storage hull can be a single hull, without the need of a support in the middle of the hull. The later facilitates the vessel design significantly.

The invention thus allows for positioning the reels closely adjacent to each other, which saves space and allows for an increased capacity.

Furthermore, supporting a reel in a storage hull, instead of on the deck of a vessel, lowers the point of gravity of the vessel. However, the storage hull creates a boundary of the reel, which has to fit in the reel storage hull.

The invention furthermore provides a trolley mounted flex-lay guide wheel, wherein the trolley is configured to support the flex-lay guide wheel on a flex lay tower, e.g. a J-lay tower and to support the flex-lay guide wheel on a deck of the vessel. Thus, the trolley according to the invention is configured to be releasable mounted to the flex-lay tower.

Furthermore, according to the invention, the trolley is thus configured to support the flex-lay guide wheel in a guide position and in a storage position. When the trolley supports the guide wheel in the guide position, the trolley is mounted on the flex-lay tower and the flex-lay guide wheel is aligned with a firing line of the flex-lay tower to enable the guide wheel to guide tubing supplied from a storage reel into the firing line.
When the trolley supports the guide wheel in the storage position, the trolley is supported by a deck of the vessel, or by a track mounted on the deck of the vessel, and supports the flex-lay guide wheel free form the deck. Thus, the trolley, and therefore the guide wheel supported by the trolley, can be stored in a storage position on the deck, away from the flex-lay tower. Thus, the trolley according to the invention allows for the flex-lay guide wheel to be removed from the flex-lay tower, and thus for the flex-lay tower to be used without the flex-lay guide wheel, for example for the flex-lay tower to be used for pipe-lay.
Because the trolley is configured to support the flex-lay wheel on the deck of the vessel, or on a track mounted on that deck, the trolley, when demounted form the tower, simply be moved to a storage location.
An alternative in the form of demounting the flex-lay wheel as such, and subsequently lowering the flex-lay wheel into a storage cradle, would require a much more complicated process.
In an embodiment, the trolley is configured to, when in the working positon, be mounted on a trolley tower track provided on the flex-lay tower, wherein the tower track extends along a longitudinal axis of the tower such that the trolley can travel up and down along the firing line of the flex lay tower, preferably, while the trolley is in the working position such that the flex-lay guide wheel can travel between a raised guide position and a lowered guide position.

In an embodiment, the trolley is configured to, when in the storage position, be moved over the deck, or along a deck track mounted on the deck, for example to be skidded over the deck or along the deck track. Thus, the trolley can be provided with skid guides for skidding

over the deck or over a track, or for example with wheels for engaging rails of a deck mounted track.

In a further embodiment, the trolley is configured both to be mounted on a trolley tower track provided on the flex-lay tower, and to be moved over the deck, or along a deck track mounted on the deck. In a further preferred embodiment, the trolley is configured such that while it is in the storage position, it can also support the flex-lay guide wheel in the working positon. Thus, the trolley can be moved over the deck, into the working position, be mounted to a trolley tower track while in the both the storage position and the working position, and be moved upwards out of the storage position by travelling along the tower track.

In an embodiment, the trolley is provided with a drive, for example hydraulic cylinders, configured to move the trolley along the tower track. As an alternative, or in addition, the trolley may be configured to be coupled with a crane mounted on the flex lay tower, such that the crane can lift or lower the trolley along the tower track. In yet another embodiment, the trolley is configured to be coupled with a travelling block movable supported by the flex-lay tower, such that the trolley can travel with the traveling block along the firing line of the tower.

In an embodiment, the trolley comprises a deck support part and a tower support part, wherein the tower support part rests on the deck support part when the trolley supports the flex-lay guide wheel in the storage position, and is separate from the deck support part when the trolley supports the flex-lay guide wheel in a raised working position.

In such an embodiment, the deck support may be permanently coupled with a deck track. In addition, or as an alternative, the deck support may be comprise a working deck or a moon pool hatch, that covers part of a moonpool when the trolleys is in a position for being coupled with, or being coupled from, the tower track.

The invention furthermore provides a vessel provided with a deck, a flex-lay tower, and a flex-lay guide wheel trolley as discussed above, wherein the deck is provided with a deck track and the flex-lay tower is provided with a tower track as discussed above.

The invention furthermore provides a hang-off clamp that is provided with PLET guide rails, for guiding a PLET being moved along the firing line of the J-lay tower into, or out off, the moonpool. The hang-off clamp is arranged on a hang-off clamp carrier, e.g. a sliding moonpool cart, in a mobile manner so as to be movable between an active position in the firing line and a retracted position remote from the firing line.

In an embodiment, the hang-off clamp arranged within the moonpool, and is adapted to support the entire weight of a seagoing pipeline. The hang-off clamp may for example be a friction clamp and/or a collar clamp.

In a further embodiment, the vessel is provided with a garage for parking the hang-off clamp. The garage preferably is located below the deck of the vessel, and opens into the moonpool, at an upper end thereof. In such an embodiment, the support track extends from the moonpool into the garage. Thus, the carrier can be moved along the track between a position in the moonpool and a position in the garage. Thus, the hang-off clamp can be moved by the carrier between the active position in the firing line, and in the moonpool, and the retracted position, away from the firing line and in the garage.

In an embodiment, the hang-off clamp is pivotally supported on the carrier to allow for alignment of the clamp with the actual firing line. In such an embodiment, the carrier comprises one or more actuators, e.g. a pivoting actuator being mounted between a hang off clamp carrier and the hang off clamp. The actuator can for example be provided in the form of a hydraulic cylinders, for pivoting the hang-off clamp between a vertical and an angled position. The pivoting actuator is used for bringing, and supporting, the hang-off clamp in a position parallel with the firing line, and for bringing the hang-off clamp in a substantial horizontal position to enable the hang-off clamp to be retracted into the garage. Thus, when the J-lay tower is set at an angle, and the firing line of the J-lay tower is at angle with the horizontal, the hang of clamp can be supported at an angle, such that it is in line with the firing line.

According to the invention, the hang-off clamp 150 is provided with PLET guide rails, for guiding a PLET being moved along the firing line of the J-lay tower. The PLET guide rails may be provided to guide the PLET from below, i.e. when the Firing line is at an angle to the horizontal, and thus support the PLET. In such a condition, the guide tracks prevent the PLET from deviation in a vertical downward direction relative to the vessel. It is submitted that the PLET guide tracks may also be used when the J-lay tower is in the vertical upright positon. In such a condition, the PLET guide tracks mat prevent sway in the horizontal direction.

In addition, or as an alternative, the hang–off clamp is provided with PLET guide tracks that engage the PLET along the sides thereof, i.e. the sides of the plane facing towards and away from the plane of the figure. These PLET guides would not support the PLET in the vertical direction, but would prevent sway of the PLET relative to the firing line.

In an embodiment, the PLET guide rails on the hang-off clamp are retractable, such that they can be moved between an extended position for guiding a PLET, and a retracted position, in which the PLET guide rails are positioned close to the hang-off clamp. The retracted positon of the PLET guide rails thus provides a compact storage configuration, which facilitates storing the carrier with the hang-off clamp and the PLET guide rails, for example in a garage located below the deck of the vessel

The invention furthermore provides an hang-off module, mounted below a pivotable supported J-lay tower, the hang off module comprising:

- a the hang-off clamp;
- a the support track, extending along the moonpool;
- a the carrier, supported by the support track, can be moved along the moonpool; and
- PLET guide rails, mounted on the hang-off clamp for guiding a PLET along the firing line, and along the hang-off clamp.

In an embodiment, the J-lay tower is provided with PLET guide rails, for guiding the PLET along the firing line. Preferably, the PLET guide rails mounted on the hang-off clamp can be aligned with the PLET guide rails mounted on the J-lay tower.

In an alternative embodiment the J-lay tower comprises an A-frame, comprising two legs and a pass through opening between those legs, and a PLET handler is provided. The PLET handler is configured to position a PLET in the firing line, through the pass through opening. In such an embodiment, the PLET handler may be provided with PLET guide rails. Preferably, the PLET guide rails on the hang-off clamp can be aligned with the PLET guide rails on the PLET handler.

In a further embodiment according to the invention, the J-lay tower is provided with a PLET Pallet, for supporting a PLET mounted on the PLET handler. In such an embodiment, the PLET pallet may be provided with guiderails, that can be aligned with PLET Pallet guide rails mounted on the carrier hang off module.

A PLET, mounted on the PLET pallet, can thus be guided along those guide rails. As was already explained above, the guide rails provided on the carrier hang off module are preferably retractable guide rails, and can thus be moved between an active position, for guiding the PLET along the firing line, and a retracted position, that provides the carrier with a compact storage configuration, and enables the carrier to be retracted into a storage position below the deck of the vessel.

The invention, and aspects thereof, will be described below with reference to the drawings. In the drawings:

Fig. 1 shows an example of a pipe sections transport and storage assembly according to the invention;

Fig. 2 shows an example of a vessel according to the invention, the vessel comprising a J-lay installation and transport and storage assembly according to the invention;

Fig. 3 shows a pipe section support frame of the transport and storage assembly of fig. 1;

Fig. 4 shows a side view of the support frame of Fig. 3 in a storage condition;

Fig. 5 shows a side view of the support frame of Fig. 3 in a use condition;

Fig. 6 shows a top view of the support frame of fig. 3 in the storage condition;

Fig. 7 shows a perspective view of two examples of a storage crate of a transport and storage assembly according to the invention, one stacked on the other;

Fig. 8 shows an example of a transport crate of a transport and storage assembly according to the invention, comprising a storage crate and a top section, with the top section in a first position;

Fig. 9 shows the transport crate of fig. 8 with the top section in a second position;

Fig. 10 shows a view in cross section of an example of a storage hull of a vessel, comprising a pipe sections transport and storage assembly according to the invention;

Fig. 11 shows a partial top view of an example of a storage hull of a vessel, comprising multiple storage crates of a transport and storage assembly according to the invention, for long pipe sections;

Fig. 12 shows a partial top view of an example of a storage hull of a vessel, comprising multiple storage crates of a transport and storage assembly according to the invention, for short pipe sections;

Fig. 13 shows a side view of multiple storage crates of a transport and storage assembly according to the invention, the storage crates comprising different types of tubulars;

Fig. 14 shows a perspective view of part of a top section of a transport and storage assembly according to the invention, provided with a gyro;

Fig. 15 shows a perspective view of the top section of fig. 14 with the gyro in another position;

Fig. 16 shows an example of a vessel according to the invention in J-lay mode;

Fig. 17 shows a perspective view of an example of a storage hull and deck of a vessel, comprising multiple storage crates of a transport and storage assembly according to the invention, for long pipe sections;

Fig. 18 shows a perspective view of the storage hull and deck of the vessel of Fig. 17, wherein the storage crates are stacked one upon the other;

Fig. 19 shows an example of a vessel according to the invention in reel-lay mode;

Fig. 20 shows a top view of an example of two storage reels according to the invention;

Fig. 21 shows an example of a vessel according to the invention in flex-lay mode;

Fig. 22 shows a perspective view of an example of a flex-lay guide wheel according to the invention on deck;
Fig. 23 shows a perspective view of the flex-lay guide wheel of Fig. 22 mounted to a pipe line launch tower;
Fig. 24 shows a side view in cross section of an example of a pipe line launch tower, more in particular of a hang off clamp according to the invention, in a first position;
Fig. 25 shows a side view in cross section of the pipe line launch tower of Fig. 24, more in particular of the hang off clamp of Fig. 24, in a second position; and
Fig. 26 shows a frontal view in cross section of the pipe line launch tower of Fig. 24, more in particular of the hang off clamp of Fig. 24, in the second position.

Figure 1 shows an example of a pipe sections transport and storage assembly 1 for transporting and storing pipe sections, preferably long pipe sections according to the invention.

The pipe sections transport and storage assembly comprises a storage crate 2 for storage of pipe sections, and a crate top section 3 for in combination with the storage crate 2 defining a box like transport crate 4. The combination of storage crate 2 and top section 3 provides the transport crate with sufficient rigidity to enable transport of the pipe sections.

The shown transport crate 4 is shown holding multiple pipe sections 5

The storage crate 2 comprises two pipe section support frames 6, and a spacer frame 7. The pipe sections support frames 6 are shown in isolation in figures 3-6.

The pipe sections support frames 6 each comprise a floor section 8 and two lateral support sections 9. The floor sections 8 have a support surface 10 for supporting the pipe sections 5 stored in the storage crate 2.

In a support position, the lateral support sections 9 extend perpendicular to the floor section 8, such that the floor section 8 and the lateral support sections 9 together define a U-shaped support frame 11 for holding a bundle of pipe sections, see for example figure 3.

The spacer frame 7 releasable connects the pipe sections support frames 6 at a distance for supporting pipe sections. Thus, the connection between the spacer frame 7 and the pipe section support frames is adapted to be easily connected and disconnected, e.g. by workman on the deck of a vessel, using standard hand tools such as a wrench.

In a preferred embodiment, the spacer frame 7 releasable connects the floor sections 8 below the pipe section support surface 10. In such an embodiment, pipe sections resting on the support surface of the support frames do not contact the spacer frame, and the spacer frame extends below the pipe sections.

Furthermore, in a preferred embodiment, the spacer frame 7 releasable connects the floor sections 8 such that, when the storage crate is step up on a storage deck, the spacer frame extends above the deck surface of the storage deck. In such an embodiment, the storage crate rest on the deck surface with, parts of, the support frames, more in particular with, parts of the floor section of the support frames.

Thus, in the preferred embodiment shown, the spacer frame 7 does not contact the deck surface of a deck on which the storage crate 2 is set up, and the spacer frame 7 does not contact the pipe sections 5 supported in the support frames 6 connected by the spacer frame 7.

The crate top section 3 is configured for releasable connecting the support frames 6, to thus, in combination with the two pipe sections support frames 6 and the pipe sections spacer frame 7, define a box like transport crate, as depicted in figure 1.

Thus, with the pipe sections transport and storage assembly according to the invention, the top section can connect, or be connected, with the transport crate to enable transport, in particular lifting e.g. by crane, of the transport crate. The combined storage crate and top section are referred to as the transport crate.

The top section 2 comprises one or more mounts 11 for coupling the top section 2 with a crane, to enable the pipe section transport crate, i.e. the combined storage crate and top section, to be lifted by the crane, e.g. to be lifted by a crane from a quay onto a vessel of vice versa.

When in a storage location, for example on a storage deck, in a cargo hull, on a lorry, the storage crate can hold a bundle of pipe sections without the top section being connected to the transport crate. Thus, multiple transport crates can be moved between one by one from a first storage location to a second storage location, e.g. between a supply vessel and a main vessel, by crane using a single top section. The crane supports the top section, and the top

section is combined with each of the storage crates once the particular storage crate needs to be lifted.

In an embodiment, the top section is to be connected, e.g. bolted, to the storage crate. In a preferred embodiment, the top section is configured to mechanically couple with the storage crate when it is lowered on top of the storage crate. For example, the top section may be provided with grippers that engage the support frames, preferably a dedicated coupling section of the support frames, to releasable connect the top section with the storage crate.

In the preferred embodiment shown, the top section 3 is releasable connected with the lateral support sections 9 of the pipe sections support frames 6.

Furthermore, in the preferred embodiment shown, once the top section 2 is connected to the support frames 6, the spacer frame 7 and the top section 2 extend on opposite sides of a bundle of pipe sections 6 held in the support frames.

Figure 2 shows an example of a vessel 12 according to the invention, the vessel comprising a pipe section launch instalation , in the embodiment shown a J-lay installation 13, and transport and storage assembly 1 according to the invention.

The vessel 12 shown is a monohull vessel, but the pipe sections transport and storage assembly according to the invention can also be combined with other types of vessels, e.g. like a semi-submersible, catamaran vessel, etc.
The pipe lay installation 13 comprise a pipe line launch tower 13, more in particular a J-lay tower. In this example it is envisaged that the tower 13 is configured for handling long pipe sections, more in particular pipe sections comprising three tubulars, with a length of approximately 36 meters.
The tower 13 has a top end that is provided with a crown block support structure 102.
The tower is pivotally mounted to the hull of the vessel, here about a horizontal pivot axis 5 at the lower end of the tower 13.
An adjuster device is provided to adjust the angle of the tower 1 relative to the hull. The angle is adjustable over a range that includes at least the vertical orientation of the tower 13.
The tower 13 has a structure with two main legs 103a, b, extending between the lower end and the upper end of the tower 13, as well as cross tower members that rigidly interconnected the main legs.
In an embodiment, as shown here, the legs of the tower are embodied as box girder. In an alternative embodiment, the tower, or part thereof, can be embodied as a lattice structure.

In an embodiment an upper portion of the tower 1 is movable or removable so as to reduce the height of the tower 13 in view of bridge passage, transit stability, etc. For example the upper portion of the tower is foldable relative to the lower portion, or the upper portion is telescopic relative to the lower portion, or a crane (e.g. of the vessel itself) can be used to lift the upper portion off the lower portion of the tower.

The installation further comprises a travelling head clamp 140 and a hoisting device for the travelling head clamp 140.

The hoisting device comprises:

- one or more hoisting winches
- one or more hoisting cables 116 driven by said one or more winches,
- a crown block 120 being mounted on the tower,
- a travelling block 130 adapted to be lowered and lifted along the tower 13 between an upper level and a lower level. The block 130 is suspended from the crown block 120 via the one or more hoisting cables 116.

The travelling block 130 carries the travelling head clamp 140, e.g. the head clamp 140 being suspended from the block 130. The head clamp 140 can be a friction clamp and/or a collar clamp, for example.

The installation further comprises a hang off device 150, here a hang off clamp 150, that is adapted to support a previously launched pipeline. the hang of clamp 150 is shown in more detail in figures 24-26. It is illustrated that the clamp 150 is mounted on the hull of the vessel, e.g. movable over hang off clamp rails 133 between an operative position and a retracted position. It is illustrated that the clamp 150 is pivotal relative to the vertical, e.g. a pivoting actuator being mounted between a hang off clamp carrier 131 and the hang off clamp 150.

The installation comprises an upper workstation 160 that is mounted on the tower 13 between the uppermost level and the lowermost level of the full vertical stroke of the head clamp 140. It is illustrated, e.g. in figure 1,5 that the upper workstation is mobile mounted on the tower 13 between an operative position and a retracted position (figure 5).

The installation is provided with a lower workstation 170 that is arranged in proximity of the lowermost level of the head clamp 140, here as preferred on the hull of the vessel, here between the two main legs of the tower.

The tower 13 is provided, above the lower workstation 170, with a lower horizontal ELUT rails, here a pair of parallel rails, that is adapted to support thereon an external line-up tool (ELUT).

The tower 1 is provided, above the upper workstation 160, with an upper horizontal ELUT rails, here a pair of parallel rails, adapted to support thereon the external line-up tool (ELUT).

The installation 13 comprises a pipe section loader system that is configured to advance a pipe section, here possibly two pipe sections simultaneously, into a position in the firing line 107.

The pipe section loader system here, as preferred, comprises a pivotal loader boom 205 that is provided with a lower set of pipe section grippers and an upper set of pipe section grippers. The lower set of pipe section grippers is adapted to grip pipe section and the upper set of pipe section grippers is adapted to grip a pipe section 209. As preferred these two pipe sections 208, 209 each a length corresponding to half the full vertical stroke between the uppermost level and the lowermost level of the head clamp 140. In this example each pipe section is a triple joint pipe section. As preferred the triple joints have been made on shore, so welded from single joints, with the two welds being inspected and coated on shore.

The loader boom 205 is pivotal between a substantially horizontal loading position, wherein the one or two pipe sections are loaded onto the boom 205, and a raised or erected position, here generally at the same angle as the tower 13 and extending along a vertical side of the tower 110.

In an embodiment, as here, it is envisaged that a set of pipe grippers, is configured and operated to transfer a pipe section to the ELUT, so as to grip the respective pipe section by means of the ELUT. To this end the ELUT is movable, e.g. skiddable, over the respective rails between a transfer position at a vertical side of the tower where the boom loader will be in raised orientation thereof and an operative position aligned with the firing line 107.

In addition to the rail for the ELUT, the tower is also provided with a horizontal rail 81 for an additional lower pipe section clamp or centralizer that is provided a retain a lower pipe section at a location above the rail and below the upper workstation.

In addition to the rail for the ELUT, the tower is also provided with a horizontal rail 186 for an additional upper pipe section clamp or centralizer that is provided a retain an upper pipe section at a location above the rails.

For example the clamps are each skiddable over the respective rail in sync with a motion of the ELUT so that a pipe section, or two pipe section joined together, is translatable (in vertical orientation) between a transfer position adjacent a vertical side of the tower 13 and a position aligned with the firing line 107.

The upper workstation 160 is provided with a side wall, floor and roof. The workstation, at least at one lateral side thereof, has a lateral access opening, here closable by one or more doors. The access opening can be configured to allow for entry of the lower portion of the upper pipe section, as depicted here. In another embodiment the access opening extends over the height of the upper workstation 160 to allow for lateral introduction of an upper portion of the lower pipe section and of a lower portion of the upper pipe section 9 into the upper workstation and into the firing line 107, for example thee lower and upper pipe sections

having been joined to one another ahead of being introduced laterally into the upper workstation 160. For example herein this join is being inspected and/or coated in the upper workstation 160.

The upper workstation 160 here is pivotally mounted onto one leg of the tower 13, so as to be pivotal about a vertical pivot between an operative position, allowing for work to be done on pipe sections in the firing line, e.g. the join thereof, e.g. welding and/or weld inspection and/or coating, and a retracted, or non-operative position.

The lower workstation 170 is provided with a side wall, floor, and roof. The workstation, at least at one lateral side thereof, has a lateral access opening, here closable by one or more doors. The access opening can be configured to allow for entry of the lower portion of the lower pipe section, or of the already joined lower and upper pipe sections,109.

The lower workstation also comprises a front access opening, here with door, to allow for the movement of the lower workstation 170 in an axial direction, e.g. over hull mounted rails, between an operative position as shown and a retracted position wherein the workstation 170 is clear of the path from the crown block downward.

The pipeline launch installation shown allows for a half vertical stroke mode J-lay operation. Herein a single pipe section is loaded onto the loader boom and supported by the upper set of pipe grippers. As discussed the single pipe section has a length corresponding to the vertical stroke of the travelling block between the uppermost level and the upper workstation 160, here a triple of 36 meter.

The loader boom raises this single pipe section into the transfer position, generally along a side of the tower 13. The pipe section is transferred onto the ELUT that is mounted on the rails and also the upper clamp is engaged with the pipe section.

The uppermost end of the previously launched pipeline 106 is arranged in the upper workstation 160, the pipeline weight being held by the hang off clamp 150 (here a friction clamp).

The ELUT can be operated to accurately align the section with the uppermost end of the pipeline 106 so that a weld or other join can be made.

The crown block, travelling block, and head clamp in its upper level is in alignment with the firing line 107 and with the pipe section. This allows for the head clamp to be engaged with the top end of section.

In a full vertical stroke mode operation the hang off clamp 150 retains the launched pipeline 106 near its upper end, e.g. just below the uppermost end thereof. The ELUT is placed on the rail.

The loader boom 205 simultaneously raises two pipe sections loaded thereon into the transfer position. These two pipe sections, here triple joint pipe sections, have a combined length

corresponding to the full vertical stroke of the travelling block 130 and head clamp 140 between the uppermost level and the lowermost level.

Preferably the two pipe sections are pre-joined, ahead of the boom loader 205 being raised, e.g. before the pre-joined sections,109 are loaded onto the boom loader.

Herein the upper workstation 160 may be in its operative position, so as to allow both the upper end of lower pipe section as well as the lower end of upper pipe section to enter into the workstation. Here, for example, the pre-made join between sections can be coated.

The assembly of the two pipe sections is connected in the lower workstation 170 to the uppermost end of the previously launched pipeline supported by the hang off clamp 150. In the same station 170, preferably, the join is inspected and coated.

Once the join of lower end of pipe section with in the lower station is made, the head clamp 140 is engaged with the upper end of the pipe section. Then the step of transfer of the weight of the launched pipeline onto the head clamp 140 is performed, allowing for the release or disengagement of the hang off clamp 150 from the pipeline. Then the head clamp 40 with the suspended pipeline 106 is lowered until the head clamp 140 reaches its lowermost level, e.g. over the height of six joints, so 72 meters. Then the hang off clamp 150 is reapplied and the weight of the pipeline is transferred back onto the clamp 150 allowing for the release of the head clamp 140.

In another practical method it is envisaged that the loader 205 only supplies a single, upper, pipe section to the tower, as discussed above, with merely the weld being made in the upper workstation 160, preferably the weld also being inspected there. Then the hoisting device is operated to lower the pipeline over half the vertical stroke so that this weld becomes arranged in the lower workstation. In said lower workstation the weld is coated.

The top end of the tower may, as here, also support an internal tool, e.g. an internal line-up tool or ILUT, that is configured to be lowered into the pipe section via the top end thereof.

The loader boom 205 may be equipped with an accessory handling device of the type discussed in WO2012091560. For example the boom loader is provided with accessory rails that align with one or more tower rails on the tower, e.g. the same as the rails on which the ELUT can travel, and with an accessory handling frame that is configured to travel from the accessory rails mounted on the loader onto the tower rails. As illustrated and preferred, the accessory handling frame is support on the lower portion of the loader boom, e.g. the frame passing between two pipe grippers of the lower set.

As illustrated the same tower 13 used for J-lay may also be equipped with components affording reel lay capability. For example, as here, the tower 13 may be equipped with an aligner wheel 250, a straightener assembly, and one or more pipeline tensioners 270 that have multiple tracks adapted to engage on the pipeline. An example of such a dual capability installation is the installation on the pipelay vessel Aegir of Heerema.

The installation in reel lay mode is illustrated in figure 19.
The same one or more tensioners 270 may, in an embodiment, also be used in conjunction with J-lay pipelaying, e.g. taking over, acting as, or assisting the hang off clamp 150.
The one or more tensioners 270 may be movable mounted to the tower 13, so as to have a retracted position (as illustrated) wherein the tensioners 270,280 are cleared from the operational positions and the path of the J-lay equipment, and an operative position wherein the tensioners 270 can be aligned on a firing line at the same side of the tower as the J-lay firing line.
In an embodiment one or more tensioners 270 on the tower are movable into alignment with the J-lay firing line, so as to play a role in the J-lay process.
It will be apparent that one or more of the mentioned rails can be movably mounted on the tower 13 so as to allow for bringing the reel lay equipment into the operative position thereof. For example, as here, said one or more rails can be pivotable.

The support frames 6 of the storage crate 2 are shown in isolation in figures 3-6. In the exemplary embodiment shown, the lateral support sections 9 of the support frames 6 are, at a top end therefore, configured to couple with a support frame of another storage crate, to enable stacking of support frames, and thus stacking of multiple storage crates. Thus, the storage crates can be stacked on upon the other in a stable manner, as for example shown in figure 10.

Furthermore, in the preferred embodiment shown, the lateral support sections 9 of the support frames 6 are configured to couple with the floor section 8 of the support frame 6 of the other pipe sections storage crate.

In the embodiment shown, the floor sections 8 of the support frames 6 are configured to couple with, more in particular to fittingly engage, a support frame 6 of another pipe sections storage crate 2, with the top end of the lateral support sections 9 of the support frames 6 of the other pipe sections storage crate, to enable stacking of support frames, and thus stacking of crates.
The floor sections 8 have openings 14 for receiving a top end of a lateral support section of another storage crate according to the invention.

In the embodiment shown, the floor sections 8 are provided with apertures or recesses 14 provided in the floor section, in the preferred embodiment shown in the circumference of the floor sections, for receiving tabs e.g. coupling teeth 15 provided at the upper end of the support frames 3, more in particular at a top end of the support sections 9.

For coupling with another storage crate, the coupling teeth 15 extend in an upward direction, i.e. perpendicular to and away from the support surface 10 of the floor sections.
In the embodiment shown, the coupling teeth 15 are beveled to facilitate engaging the openings 14 with the coupling teeth, to make the coupling teeth fittingly engage the openings 14 of the floor section 8 of the other storage crate, and thus facilitate stacking one crate on top of the other.

Between the coupling teeth 15, the lateral support sections 9 are provided with a support area for supporting a floor section of another storage crate. Furthermore, the lateral support sections are provided with coupling devices, in the embodiment shown comprising an eye 1, for coupling another storage crate or a with a top section.

In the embodiment shown, the floor sections 8 are provided with four openings 14 provided in pairs on opposite sides of the floor section, for receiving four coupling teeth 15, provided on a top end of the lateral support sections of the other storage crate according to the invention.
In the preferred embodiment shown, see for example figure 5, for each support frame 6, the lateral support section 9 at one side of the floor sections 8 is a high lateral support section, and the lateral support section 9 on the opposite side of the floor section 8 is a low lateral support section. The high lateral support section is configured to engage the support frame of another pipe sections storage crate at a side thereof, to facilitate positioning the other pipe sections storage crate and thus stacking of the other pipe sections support crate on top of the pipe sections support crate.

Between the openings 14, the floor sections 8 are provided with a support tab for resting on a support area of a lateral support section of another storage crate. Furthermore, the support tabs are provided with coupling devices, in the embodiment shown comprising a recess for receiving an eye provided on the top of a lateral support section of another storage crate. Thus, stacked storage crates stacked on top of each other can be connected to each other.

The openings or recesses 14 are open on one side, and are thus adapted for receiving the coupling teeth 15 of a lateral support section of another storage crate by moving the floor section in a lateral direction, i.e. in a direction parallel to the support surface of the floor section, relative to the top end of the lateral support section of the other storage crate.

This configuration of the floor sections, wherein the storage crates are provided with a high lateral support section at one side of the floor sections, and a low lateral support section on

the opposite side of the floor sections, allows for a method for stacking a support crate as disclosed herein on top of another support crate, the method comprising the steps:
- combining the storage crate to be stacked upon the other storage crate with a top section into a transport crate, and lifting the transport crate with a crane;
- moving the transport crate in a lateral direction over a storage crate, such that the support frames of the transport crate engage the high lateral supports of the storage crate, and thus aligning the transport crate with the storage crate;
- lowering the transport crate on top of the storage crate; and
- uncoupling the top section from the storage crate stacked upon the other storage crate.

In the embodiment shown, the floor sections 8 have a width perpendicular to a longitudinal axis of the storage crate 2, and the combined height of the lateral support sections 9 is less than the width of the floor section. Thus, see figure 4 and figure 6, the lateral support sections 9 can be folded or stacked onto the floor section 8, which enables a compact configuration of the support frames for storage thereof.

In the preferred embodiment shown, the lateral support sections 9 of the support frames 6 are, at a bottom end thereof, with hinges 17, hingeable connected to the floor section 8 of the lateral support section 9, such that the lateral support sections can be folded about a folding axis parallel to the support surface of the floor section, from the support position into a transport position onto the floor section, to provide the support frames with a compact storage configuration.
Furthermore, the support frames are provided with securing devices, for securing the lateral support section relative to the floor section in the support position and in the transport position.

In the exemplary embodiment shown, the top section 2 is provided with a vertical or upright gyro 16, i.e. a gyro for spinning about a horizontal axis, in line with a centre of gravity of the top section, for, when the top section is supported by a crane, stabilizing the top section, e.g. preventing unwanted pivoting of the top section about a vertical axis. The gyro is shown in detail in figure 1 and figure 15.

In the particular embodiment shown, the gyro 16 is hingeble mounted on the top section 3. Thus, the gyro can be used for adjusting the positon of the top section when supported by a crane, and thus can be used to adjust the position of the top section when lowered by a crane on top of a storage crate.

In the embodiment shown, the gyro 16 is mounted in a gyro support frame 17, and is pivotable mounted in that support frame such that the gyro can be pivoted relative to the gyro support frame about a vertical axis. Furthermore, the gyro support frame is pivotable connected with the top section, such that the gyro support frame can pivot about a horizontal axis relative to the top section.

The gyro 16 can be hinged about a horizontal axis, i.e. an axis parallel to the support surface of the floor sections of the support frames, relative to the top section, and wherein the gyro is held in the vertical position by dampers, and can be pivoted about the horizontal axis using actuators.

In such an embodiment, tilting the gyro about the horizontal axis, and out of a vertical plane, creates a pivoting of the top section when supported by a crane. Thus, when the position of the gyro, i.e. its angle relative to a vertical plane of the gyro, is actively controlled using actuators, the orientation of the top section can be actively controlled. This can for example be used for orienting the top section while being lifted, for example while lowered onto a storage cate to be combined with said storage crate into a transport crate.

The gyro support frame is held in the upright position relative to the top section by dampers and/or can be pivoted about the horizontal axis using actuators

It is submitted that in an equivalent alternative embodiment, the gyro support frame is pivotable relative to the top section about a vertical axis, and the gyro is supported in the gyro support frame such that it can pivot relative to the gyro support frame about a horizontal axis.

In the embodiment shown, the gyro can be pivoted relative to the top section about a vertical axis and about a horizontal axis, the gyro can thus be used to dampen unwanted pivoting of the top section about a horizontal axis.

In the embodiment shown, the floor sections of the support frames are configured to couple with floor sections of another storage crate. Thus, adjacent storage crates can be coupled to provide a more solid base for stacking other storage crates upon them.

For example figure 6 shows a top view of a floor section 8, wherein the floor section at the corners at the left side of the figure, at the hinges that connect the floor section with the left support section, is provided with couple fingers. At the opposite side, the floor section is

provided, at the hinges that connect the floor section with the right support section, with recesses 20 for receiving coupling fingers of another storage crate.

Figure 11 and figure 12 depicted multiple storage crates set up one next to the other, with the floor section engaging each other, i.e. with the coupling fingers of one storage crate being received in the recess related recesses on the other storage crate.

The invention also provides a transport and storage assembly wherein the pipe sections transport crate 4, i.e. the combination of storage crate and top section, can be configured for transporting short pipe sections and for transporting long pipe sections.

For example figures 10-12 depict storage crate of different size. One size for storage of short pipe sections and one size for storage of long pipe sections.

In such an embodiment, the spacer frame 7 is a long pipe section spacer frame for releasable connecting the pipe sections support frames 6 at a first distance for transporting long pipe sections 5, and the crate top section 3 is a long crate top section that is configured for releasable connecting the support frames 6 at the first distance. Thus, in combination with the two pipe sections support frames 6 and the long pipe sections spacer frame 7, the lon top section 2 defines the box like transport crate 4 with a long pipe sections transport configuration.

In addition, the transport and storage assembly further comprises short pipe sections spacer frame 27 and a short top section.

The short pipe sections spacer frame 27 is adapted for releasable connecting the pipe sections support frames 6 at a second distance for transporting short pipe sections 25.

The short top section is configured for releasable connecting the support frames 6, in the embodiment shown for connecting with the lateral support sections of the pipe sections support frames, at the second relative distance. The short top section comprises one or more mounts for coupling the top section with a crane, to enable the pipe section transport crate to be lifted by the crane, e.g. to be lifted by a crane from a quay onto a vessel of vice versa.

Thus, in combination with the two pipe sections support frames 6 and the short pipe sections spacer frame 27, the short top section defines the box like transport crate with a short pipe sections transport configuration.

In the embodiment shown, compare figure 11 with figure 12, the first distance is shorter than half the second distance, preferably is less than a quarter of the second distance. Thus, the storage crates can be used with short and long pipe sections, e.g. pipe sections comprising a single tubular and pipe sections comprising three tubulars.

In the embodiment shown, the pipe sections transport crate for long pipe section is configured to transport pipe sections of a length of 35m or more, in the embodiment shown for pipe section of about 36m, e.g. triples, i.e. a pipe section comprising three tubulars. The storage crate is configured to hold the pipe sections such that they extend beyond the support frames.

In the embodiment shown, the pipe sections transport crate for short pipe section is configured to transport pipe sections of up to 15m, in the embodiment shown for pipe sections of about 12m, e.g. singles, i.e. a pipe section comprising one tubular. The storage crate is configured to hold the pipe sections such that they extend beyond the support frames.

It is submitted that the invention allows for using a relatively light weight storage crate for storing and transporting long pipe sections. This is beneficial because using standard crates, i.e. crates comprising an enclosed storage space for holding tubulars, would became to heave for efficient use and storage, either while supporting a bundle of pipe sections or when not in use.

It is submitted that the spacer frames connect the floor sections of the support frames and thus extend below a bundle of pipe sections held by the support frames. The transport crate top sections connect the support frames along a top side of the transport crate. Thus, the spacer frame and the top section of the transport crate extend in a longitudinal direction of the transport crate, and connected the support frames on opposite sides of a bundle of pipe sections held by the support frames, i.e. extend long the top side and the bottom side of the transport frame respectively. In this way they are optimal positioned for supporting bending forces caused the bundle of pipe sections when the transport crate is being transported, for example is being lifted by a crane.

Furthermore, the invention allows for adapting the crate to the size of pipe sections to be transported by changing the long spacer frame and long top section with the short spacer frame and the short top section. The support frames can be used for transporting both large pipe sections and short pipe sections, which allows for a flexible transport system. Enabling

the use of long and short spacer frames and top sections allows for a providing crates that have the optimal strength and weight for transporting a particular size of pipe sections. It is not required to use oversized crates for transporting short pipe sections, and it is not necessary to keep both large and small size crates on stock.

In the embodiment shown, the crates are used for storage of tubulars to be used in pipe-lay, more in particular in J-lay. It is submitted that the pipe sections transport crate is also suitable for transporting and storing pipe sections comprising drilling tubulars, casing tubulars, or similar drilling components, and is thus not only suitable for use on pipe lay vessels, but is also suitable for use on drilling vessels.

The pipe sections transport crate allows for connecting tubulars on shore, and for the relatively large pipe sections to be transported onto and stored on an offshore vessel. By thus providing relatively long pipe sections, the transport crates allow for the pipe lay process to be sped up by reducing the number of connections, i.e. welding pipe sections together, that have to be made.

The invention furthermore provides a storage crate, the storage crate comprising the two pipe sections support frames and the pipe sections spacer frame disclosed herein.

It is submitted that the offshore vessel 12, shown in for example figure 2, comprises:
- a pipe sections transport and storage system comprising pipe sections transport crates 8, 28 that can be configured for transporting short pipe sections and for transporting long pipe sections, the transport and storage system comprising:
    - at least four pipe section support frames 6;
    - at least one short top section;
    - at least one long top section 3;
    - at least one short spacer frame 7; and
    - at least one long spacer frame 27;
- a pipe section launch installation, in the form of a J-lay tower 13, comprising a firing line 107;
- a pipe section up-end device 205;
- a storage crate storage deck, e.g. in a storage hull, for supporting stacks of pipe sections storage crates; and
- a pipe section transport crane, for moving a pipe section from a pipe sections storage crate located at the storage crate storage deck, to the pipe section up end device.

The storage deck 21 is provided with a grid of mounts 22, which mounts 22 are spaced for receiving floor sections between them such that they secure the floor sections, and thus the storage crates, against a sliding movement over the deck. The pipe section transport and storage system comprises short spacer frames and long spacer frames. the short spacer frame and the long spacer frame are dimensioned such that the mounts of the grid can be coupled with both the floor sections of a storage crate for short pipe sections and the floor sections of a storage crate for long pipe sections.

Furthermore, the deck mounts are spaced for supporting adjacent rows of support crates, such that creates of one row are adjacent to the crates of an other row, and the floor sections of the adjacent crates are coupled.

The vessel comprises support frame guide pillars 26, e.g. mounted on the storage deck or along a wall surface 28 of a storage hull, which guide pillars are configured to cooperate with the support frames, more in particular with guide sections in the floor sections and/or the support sections, for engaging the support frame in a lateral direction, and guiding the engaged support frame in a vertical direction, to facilitate positioning the support frames, and thus the transport crates, while being lowered by crane onto the storage deck, and preferably correctly position the floor sections correctly relative to mounts provided on the storage deck.

Proving the vessel with such guide pillars facilitates lifting the storage crates, when in the transport configuration, onto and from the deck.

The guide pillars have a height of two or more stacked storage crates, to furthermore facilitate stocking of crates as well as placing crates on the storage deck.

The invention provides a marine pipeline installation vessel for laying an offshore rigid pipeline in the sea, onto the seabed. According to the invention, the vessel comprises:

a hull and a deck;

a reel system comprising:

- a first vertical storage reel and a second vertical storage wheel, each for the storage of a spooled rigid pipeline to be laid, each storage reel comprising:

-a left and right vertical flange between which a hub extends; and

-a hub onto which multiple layers of pipeline, each layer comprising several windings of pipeline, can be stored;

- a reels support structure, wherein the reels support structure is supported by the hull of the vessel, and wherein the reels support structure rotatable supporting the first storage reel and the second storage reel, such that the first reel can be rotated about a first reel rotational axis and the second reel can be rotated about a second reel rotational axis;

- a first storage reel drive and a second storage reel drive to rotate the storage reels about their respective rotational axis;

a pipeline launch assembly mounted to the vessel downstream of the reels in a direction of unspooling, which pipeline launch assembly is adapted to launch unwound pipeline along a firing line into the sea, the pipeline launch assembly comprising:

a pipeline guide having an elongated pipeline guide member orientated in the direction of the storage reels and providing a circular or semi-circular pipeline guide surface, which pipeline guide is adapted to guide pipeline unwound from the storage reels over the pipeline guide into the firing line,

a straightener provided downstream of the storage reel in the direction of unspooling to provide straightening to the rigid pipeline;

at least one tensioner provided downstream of the pipeline guide which is adapted for engaging the pipeline in the firing line and supporting at least part of the weight of the launched pipeline to control the rate of laying of the rigid pipeline on the seabed; and

a pipeline support device adapted to support the weight of the launched pipeline in the firing line,

wherein the reels support structure further comprises:

a horizontal reels support axle, the axle having an axle body extending between a first axle end and a second axle end;

a first axle support and a second axle support, located on opposite sides of the storage reels, wherein the first axle support and the second axle support support the first axle end and the second axle end respectively,

wherein the support axle is adapted to support the first storage reel and the second storage reel while said axle is supported at the axle ends only, and wherein the support axle is adapted to support the first reel and the second reel at an angle relative to each other.

Fig. 21 shows such a marine pipeline installation vessel 12 for laying an offshore rigid pipeline in the sea, onto the seabed. According to the invention, the vessel 12 is provided with the first storage reel 31 and the second storage reel 32, and a horizontal reels support axle 33 that is supported at the axle ends only. The support axle 33 is adapted to support the first reel 31 and the second reel 32 at an angle relative to each other.
Fig. 20 shows a top view of the first storage reel 31 and the second storage reel 32, with the reels at an angle to each other. The reels are shown without pipeline, and partially in see through to show the axle 33, marked with dotted lines.

Such a vessel comprises a single reel storage hull and a reel system comprising the two inclined reels 31,32. Both reels are supported by the single reel axle 33, which axle spans the reel storage hull from one side to an opposite side, and which axle is supported at its outer ends.

Because the reel support axle is not supported at the section that extends between the two reels, the reels can be positioned closely adjacent to each other, end the heel storage hull can be a single hull, without the need of a support in the middle of the hull. The later facilitates the vessel design significantly.

The invention thus allows for positioning the reels closely adjacent to each other, which saves space and allows for an increased capacity.

The invention furthermore provides a trolley mounted flex-lay guide wheel 300, wherein the trolley 301 is configured to support the flex-lay guide wheel 300 on a flex lay tower, e.g. a J-lay tower 13 and to support the flex-lay guide wheel 300 on a deck 302 of the vessel 12. Thus, the trolley 301 according to the invention is configured to be releasable mounted to the flex-lay tower 13.

Fig. 22 shows the trolley 301 supporting the flex lay guide wheel 300 on the deck 302 of the vessel 12. Fig, 23 shows the trolley 301 supporting the flex lay guide wheel 300 on a flex lay tower 13.

In the exemplary embodiment shown, the trolley 301 is configured to, when in the working positon, be mounted on a trolley tower track 306 provided on the flex-lay tower 13. The tower track 306 extends along a longitudinal axis of the tower 13 such that the trolley 301 can travel up and down along the firing line 17 of the flex lay tower.

furthermore, in the exemplary embodiment shown, the trolley is configured to, when in the storage position, be moved along a deck mounted track 305, more in particular, to be skidded over the deck track 305. The trolley is provided with wheels for engaging rails of a deck mounted track.

Thus, in the embodiment shown, the trolley is configured both to be mounted on a trolley tower track provided on the flex-lay tower, and to be moved along a deck track mounted on the deck. Also, in the embodiment shown, the trolley is configured such that while it is in the storage position, it can also support the flex-lay guide wheel in the working positon. Thus, the trolley can be moved along the deck track, into the working position, be mounted to the trolley tower track while in the both the storage position and the working position, and be moved upwards out of the storage position by travelling along the tower track.

furthemore, in the exemplary embodiment shown, the trolley comprises a deck support part 307 and a tower support part 308. The tower support part 308 rests on the deck support part 307 when the trolley 301 supports the flex-lay guide wheel 300 in the storage position, and the tower support part 308 is separate from the deck support part 307 when the trolley 301 supports the flex-lay guide wheel 300 in a raised working position.

also, in the embodiment shown, the deck support 307 comprises a working deck that covers part of a moonpool 101 when the trolleys 301 is in a position for being coupled with, or being coupled from, the tower track 308.

Fig. 21 shows an example of a vessel 12 according to the invention in flex-lay mode. In the particular embodiment shown, the vessel 12 is provided with a deck and a pipe line launch tower 13. When the pipe line launch tower 13 is provided with the flex lay guide wheel 300, it can function as a flex-lay tower for guiding pipe form a storage reel 304 along the flex-lay guide wheel 300 into the firing line 17 of the flex-lay tower 13 and into the sea.

The pipe line launch tower can be provided with a flex lay guide wheel by mounting a flex-lay guide wheel trolley to the tower. Thus, the pipeline launch tower is also a flex-lay tower.

In the particular embodiment shown, the deck 302 of the vessel 12 is provided with a deck mounted track 305 and the flex-lay tower 13 is provided with a tower track 306.

Fig. 23 shows the trolley mounted flex-lay guide wheel 300 mounted to the pipe line launch tower 13, or the flex-lay tower. The trolley 301 is configured to support the flex-lay guide wheel 300 on the flex lay tower 13.

The trolley 301 according to the invention is configured to be releasable mounted to the flex-tower 13.

In the embodiment shown, the tower is provided with a tower track, that enables the trolley to travel along the tower, and a deck track, that enables the trolley to be moved along the deck between a position in which the trolley supports the flex lay guide wheel aligned with the firing line, and in which the trolley can be coupled with and uncoupled from, and a storage position away from the tower.

Fig. 22 shows the flex-lay guide wheel trolley 301 in a storage position on the deck 302 of the vessel 12. In the storage position, the trolley 301 supports the flex lay guide wheel 300 in a storage position. The trolley is located away from the flex-lay tower 13, more in particular is located at the end of the dreck mounted track 305. In Fig. 22, the storage reel 304 for tubing 303 shown in Fig. 23 is removed from the deck mounted track 305.

Furthermore, in the exemplary embodiment shown, the trolley 301 comprises a deck support part 307 and a tower support part 308. The tower support part 308 rests on the deck support part 307 when the trolley 301 supports the flex-lay guide wheel 300 in the storage position, for example shown in Fig. 22. The tower support part 308 and is separate from the deck support part 307 when the trolley 301 supports the flex-lay guide wheel 300 in a raised working position, for example shown in Fig. 23.

In such an embodiment, the deck support may be permanently coupled with a deck track. In addition, or as an alternative, the deck support mat be comprise a working deck, which working deck covers part of a moonpool when the trolleys is in a position for being coupled with, or being coupled from, the tower track.

The invention furthermore provides a vessel provided with a deck, a flex-lay tower, and a flex-lay guide wheel trolley as discussed above, wherein the deck is provided with a deck track and the flex-lay tower is provided with a tower track as discussed above.

The invention furthermore provides a hang-off clamp that is provided with PLET guide rails, for guiding a PLET being moved along the firing line of the J-lay tower into, or out off, the moonpool, depicted in figures 24-26. The vessel is provided with a hang-off clamp 150, here arranged within the moonpool 101 as is preferred. the hang-off clamp 150 is adapted to support the entire weight of the seagoing pipeline. The hang-off clamp 150 may for example be a friction clamp and/or a collar clamp. As illustrated here, the hang-off clamp 150 is arranged on a hang-off clamp carrier 131 in a mobile manner so as to be movable between an active position in the firing line 11 and a retracted position remote from the firing line 107. During pipelaying by means of the tensioners 270 the hang-off clamp is in the remote position thereof. In the embodiment shown here the carrier 131 is embodied as a sliding moonpool cart. In the embodiment shown, the vessel is provided with a garage 134, shown on the right side of the moonpool 101, for parking the hang-off clamp 150. The garage is located below the deck of the vessel, and opens into the moonpool, at an upper end thereof. The support track 132 comprises hang-off clamp rails 151 on opposite sides of the moonpool. The rails 151 furthermore extend into the garage 134. The carrier 131 bridges the moonpool, and is supported on the rails 151 of the support track 132. Thus, the carrier can be moved along the track 132 between a position in the moonpool 101 and a position in the garage 134. Thus, the hang-off clamp 150 can be moved by the carrier 131 between the active position in the firing line 107, and in the moonpool 101, and the retracted position, away from the firing line 107 and in the garage 134.

The hang-off clamp 150 is pivotally supported on the carrier 131 to allow for alignment of the clamp 150 with the actual firing line 107. The carrier 131 comprises one or more actuators, e.g. a pivoting actuator being mounted between a hang off clamp carrier 131 and the hang off clamp 150. The actuator can for example be provided in the form of a hydraulic cylinders, for pivoting the hang-off clamp 150 between a vertical and an angled position. The pivoting actuator is used for bringing, and supporting, the hang-off clamp 150 in a position parallel with the firing line 107, and for bringing the hang-off clamp 150 in a substantial horizontal position to enable the hang-off clamp to be retracted into the garage 134.
Thus, when the J-lay tower is set at an angle, and the firing line of the J-lay tower is at angle with the horizontal, the hang of clamp can be supported at an angle, such that it is in line with the firing line.
In Fig. 24. The J-lay tower is shown while it is set at an angle. The hang-off clamp 150 is set at an angle by the pivoting actuator such that it is parallel with the firing line 107 of the J-lay tower. In the condition shown, the hang of clamp 150 is positioned parallel with the firing line, but is not in line with the firing line.

In the preferred embodiment shown, the hang-off clamp 150 is provided with PLET guide rails 135, for guiding a PLET being moved along the firing line of the J-lay tower. The PLET guide rails 135 are shown in an extended position, depicted in full lines, and the PLET guide rails 135' are shown in a retracted position, depicted in dotted lines.

Fig. 24 shows the PLET guide rails 135 guide the PLET from below, and thus support the PLET. Thus, the guide tracks prevent the PLET from deviation in a plane parallel to the plane of the Figure, i.e. in a vertical downward direction relative to the vessel.

It is submitted that the PLET guide tracks may also be used when the J-lay tower is in the vertical upright positon. In such a condition, the PLET guide tracks mat prevent sway in the horizontal direction.

In addition, or as an alternative, PLET guide tracks may be provided that engage the PLET along the sides thereof, i.e. the sides of the plane facing towards and away from the plane of the figure. These PLET guides would not support the PLET in the vertical direction, but would prevent sway of the PLET relative to the firing line.

In the embodiment shown, the PLET guide rails 135 on the hang-off clamp are retractable, such that they can be moved between an extended position for guiding a PLET, and a retracted position. In the particular embodiment shown, the PLET guide rails are supported by hingable support arms, mounted on the hang-off clamp.

In the extended positon, shown in the figures, the PLET guide rails are positioned such that they prevent the PLET from contacting the hang-off clamp. Thus, it is prevented that the PLET collides with the hang-off clamp, possibly causing damage to the hang-off clamp and/or the PLET.

In the retracted position, the PLET guide rails are positioned close to the hang-off clamp. The retracted positon of the PLET guide rails thus provides a compact storage configuration, which facilitates storing the carrier with the hang-off clamp and the PLET guide rails in the garage below the deck of the vessel

The invention furthermore provides an hang-off module, mounted below a pivotable supported J-lay tower, the hang off module 133 comprising:

- the hang-off clamp 150,
- the support track 132, extending along the moonpool 101
- the carrier 131, supported by the support track 132, can be moved along the moonpool 101;

and- PLET guide rails, mounted on the hang-off clamp for guiding a PLET along the firing line, and along the hang-off clamp.In an embodiment, the J-lay tower is provided with PLET guide rails, for guiding the PLET along the firing line. Preferably, the PLET guide rails

mounted on the hang-off clamp can be aligned with the PLET guide rails mounted on the J-lay tower.

In an alternative embodiment the J-lay tower comprises an A-frame, comprising two legs and a pass through opening between those legs, and a PLET handler is provided. The PLET handler is configured to position a PLET in the firing line, through the pass through opening. In such an embodiment, the PLET handler may be provided with PLET guide rails. Preferably, the PLET guide rails on the hang-off clamp can be aligned with the PLET guide rails on the PLET handler.

In a further embodiment according to the invention, the J-lay tower is provided with PLET Pallet, for supporting a PLET mounted on the PLET handler. In such an embodiment, the PLET pallet may be provided with guiderails, that can be aligned with PLET Pallet guide rails mounted on the hang off module.

A PLET, mounted on the PLET pallet, can thus be guided along those guide rails. As was already explained above, the guide rails provided on the hang off module are preferably retractable guide rails, and can thus be moved between an active position, for guiding the PLET along the firing line, and a retracted position, that provides the carrier with a compact storage configuration, and enables the carrier to be retracted into a storage position below the deck of the vessel.

The invention can be summarized according to one or more of the following clauses:

1. Pipe sections transport and storage assembly for transporting and storing pipe sections, preferably long pipe sections, the assembly comprising a storage crate for storage of pipe sections, and a crate top section for in combination with the storage crate defining a box like transport crate, the transport crate having sufficient rigidity to enable transport of the pipe sections,

wherein the storage crate comprises:

- two pipe sections support frames, the pipe section support frames each comprising a floor section and two lateral support sections, wherein the floor sections have a support surface for supporting pipe sections stored in the storage crate and wherein the lateral support sections in a support position extend perpendicular to the floor section, such that the floor section and the lateral support sections together define a U-shaped support frame for holding a bundle of pipe sections; and

- a spacer frame, releasable connecting the pipe sections support frames at a distance for supporting pipe sections, preferably releasable connecting the floor sections below the pipe sections support surface;

wherein the crate top section is configured for releasable connecting the support frames, preferably for releasable connecting with the lateral support sections of the pipe sections

support frames, to thus, in combination with the two pipe sections support frames and the pipe sections spacer frame, define a box like transport crate wherein preferably the spacer frame and the top section extend on opposite sides of a bundle of pipe sections held in the support frames; and

wherein the top section comprises one or more mounts for coupling the top section with a crane, to enable the pipe section transport crate to be lifted by the crane, e.g. to be lifted by a crane from a quay onto a vessel of vice versa.

2. Transport and storage assembly according to clause 1, wherein lateral support sections of the support frames are, at a top end therefore, configured to couple with a support frame of an other storage crate according to clause 1, preferably with the floor section of the support frame of the other pipe sections storage crate, to enable stacking of support frames, and thus stacking of multiple storage crates.

3. Transport and storage assembly according to clause 1 or clause 2, wherein the floor sections of the support frames are configured to couple with, e.g. to fittingly engage, a support frame of another pipe sections storage crate, preferably with the top end of the lateral support sections of the support frames of the other pipe sections storage crate, to enable stacking of support frames, and thus stacking of crates.

4. Transport and storage assembly according to clause 3, wherein the floor sections have openings for receiving a top end of a lateral support section of another storage crate according to clause 1.

5. Transport and storage assembly according to one or more of the preceding clauses, wherein for each support frame, the lateral support section at one side of the floor sections is a high lateral support section, and the lateral support section on the opposite side of the floor section is a low lateral support section, and wherein the high lateral support section is configured to engage the support frame of an other pipe sections storage crate at a side thereof, to facilitate positioning the other pipe sections storage crate and thus stacking of the other pipe sections support crate on top of the pipe sections support crate.

6. Transport and storage assembly according to clause 4 and clause 5, wherein the floor sections have openings for receiving the top end of a lateral support section of an other storage crate by moving the floor section in a lateral direction, i.e. in a direction parallel to the support surface of the floor section, relative to the top end of the lateral support section of the other storage crate.

7. Transport and storage assembly according to one or more of the preceding clauses, wherein the floor sections have a width perpendicular to a longitudinal axis of the storage crate, and wherein the combined height of the lateral support sections is less than the width of the floor section.

8. Transport and storage assembly according to one or more of the preceding clauses, wherein the lateral support sections of the support frames are, at a bottom end thereof, hingeable connected to the floor section of the support frames, such that the lateral support sections can be folded from the support position into a transport position onto the floor section, to provide the support frames with a compact storage configuration.

9. Transport and storage assembly according to clause 8, wherein the support frames are provided with securing devices, for securing the lateral support section relative to the floor section in the support position and in the transport position.

10. Transport and storage assembly according to one or more of the preceding clauses, wherein the top section is provided with a vertical or upright gyro, i.e. a gyro for spinning about a horizontal axis, in line with a centre of gravity of the top section, for, when the top section is supported by a crane, stabilizing the top section, e.g. preventing unwanted pivoting of the top section about a vertical axis.

11. Transport and storage assembly according to clause 10, wherein the gyro is hingeble mounted, such that the gyro can be hinged about a horizontal axis, i.e. an axis parallel to the support surface of the floor sections of the support frames, relative to the top section, and wherein the gyro is held in the upright position by dampers and/or can be pivoted about the horizontal axis using actuators.

12. Transport and storage assembly according to clause 11, wherein the gyro is mounted in a gyro support frame, wherein the gyro can be pivoted relative to the gyro support frame about a vertical axis, and the gyro support frame can pivot about a horizontal axis relative to the top section, and wherein the gyro is held in the upright position relative to the support frame by dampers and/or can be pivoted about the horizontal axis using actuators, and the gyro support frame is held in the upright position relative to the top section by dampers and/or can be pivoted about the horizontal axis using actuators

13. Transport and storage assembly according to one or more of the preceding clauses, wherein the floor sections of the support frames are configured to couple with floor sections of an other storage crate.

14. Transport and storage assembly according to one or more of the preceding clauses, wherein the floor sections of the storage crate are configured to be coupled with mounts provided on a deck or in the hull of a vessel.

15. Transport and storage assembly according to one or more of the preceding clauses, wherein the pipe sections transport crate is configured to transport pipe sections of a length over 27m preferably the transport crate is configured to transport pipe sections of a length of 35m or more e.g. triples, i.e. a pipe section comprising three tubulars.

16. Transport and storage assembly according to one or more of the preceding clauses, wherein the storage crate is configured to hold the pipe sections such that they extend beyond the support frames.

17. Transport and storage assembly according to one or more of the preceding clauses, wherein the spacer frame is a truss, preferably are a ladder truss.

18. Transport and storage assembly according to one or more of the preceding clauses, wherein the pipe sections transport crate can be configured for transporting short pipe sections and for transporting long pipe sections,
wherein the spacer frame is a long pipe section spacer frame for releasable connecting the pipe sections support frames at a first distance for transporting long pipe sections, and
wherein the crate top section is a long crate top section that is configured for releasable connecting the support frames at the first distance, to thus, in combination with the two pipe sections support frames and the long pipe sections spacer frame, define the box like transport crate with a long pipe sections transport configuration;
wherein the transport and storage assembly further comprises:
- a short pipe sections spacer frame, for releasable connecting the pipe sections support frames at a second distance for transporting short pipe sections, preferably for releasable connecting the floor sections below the tubular support surface; and
- a short top section, wherein the short crate top section is configured for releasable connecting the support frames, preferably for connecting with the lateral support sections of the pipe sections support frames, at the second relative distance, to thus, in combination with

the two pipe sections support frames and the short pipe sections spacer frame, define the box like transport crate with a short pipe sections transport configuration, and
wherein the short top section comprises one or more mounts for coupling the top section with a crane, to enable the pipe section transport crate to be lifted by the crane, e.g. to be lifted by a crane from a quay onto a vessel of vice versa.

19. Transport and storage assembly according to clause 18, wherein the first distance is shorter than half the second distance, preferably is less than a quarter of the second distance.

20. Transport and storage assembly according to clause 18 or clause 19, wherein the transport crate with the short pipe section transport configuration, is configured to transport pipe sections of a length of up to 27m, e.g. doubles, i.e. a pipe sections comprising two tubulars and
wherein the transport crate with the long pipe sections transport configuration, is configured to transport pipe sections of a length of 35m or more, e.g. triples, i.e. a pipe sections comprising three tubulars.

21. Storage crate, the storage crate comprising the two pipe sections support frames and the pipe sections spacer frame according to one or more of the clauses 1-20

22. Storage crate according to clause 21, wherein the storage crate holds a bundle of pipe sections.

23. Storage crate according to clause 22, wherein the pipe sections comprise three tubulars.

24. Storage crate according to clause 22 or clause 23, wherein the pipe sections extend beyond the support frames.

25. Pipe section transport and storage system, the transport and storage system comprising:
- multiple storage crates according to one or more of the clauses 1-20; and
- at least on top section according to one or more of the clauses 1-20.

26. Pipe section transport and storage system, comprising pipe sections transport crates that can be configured for transporting short pipe sections and for transporting long pipe sections, the transport and storage system comprising:
- at least four pipe section support frames according to one or more of the clauses 1-20;

- at least one short top section according to one or more of the clauses 18-20;
- at least one long top section according to one or more of the clauses 18-20;
- at least one short spacer frame according to one or more of the clauses 18-20; and
- at least one long spacer frame according to one or more of the clauses 18-20.

27. Offshore vessel, e.g. a drilling vessel or a pipe lay vessel, the vessel comprising:
- a pipe sections transport and storage system according to clause 25 or clause 26;
- a pipe section launch tower, e.g. a drilling tower or a J-lay tower, comprising a firing line;
- a pipe section up-end device;
- a storage crate storage deck, e.g. in a storage hull, for supporting stacks of pipe sections storage crates; and
- a pipe section transport crane, for moving a pipe section from a pipe sections storage crate located at the storage crate storage deck, to the pipe section up end device.

28. Offshore vessel according to clause 27, wherein the storage deck is provided with a grid of mounts, which mounts are configured to be coupled with corresponding coupling devices provided in the floor sections of the pipe sections storage crates, to lock the storage crates in place.

29. Offshore vessel according to clause 27 or clause 28, wherein the storage deck is provided with a grid of mounts, which mounts are spaced for receiving floor sections between them such that they secure the floor sections, and thus the storage crates, against a sliding movement over the deck.

30. Offshore vessel according to clause 27 and clause 28, wherein the short spacer frame and the long spacer frame are dimensioned such that the mounts of the grid can be coupled with both the floor sections of a storage crate for short pipe sections and the floor sections of a storage crate for long pipe sections; or
Offshore vessel according to clause 28 or clause 29, wherein the deck mounts are spaced for supporting adjacent rows of support crates, preferably such that creates of one row are adjacent to the crates of an other row, and preferably the floor sections of the adjacent crates are coupled.

31. Offshore vessel according to one or more of the clauses 27-30, wherein the vessel comprises support frame guide pillars, e.g. mounted on the storage deck or along a wall surface of a storage hull, which guide pillars are configured to cooperate with the support frames, more in particular with guide sections in the floor sections and/or the support

sections, for engaging the support frame in a lateral direction, and guiding the engaged support frame in a vertical direction, to facilitate positioning the support frames, and thus the transport crates, while being lowered by crane onto the storage deck, and preferably correctly position the floor sections correctly relative to mounts provided on the storage deck.

32. A marine J-lay pipelaying installation for use on an offshore vessel for laying an offshore pipeline on a seabed, preferably a vessel according to one or more of the clauses 27-31, wherein the installation is configured to handle long pipe sections, more in particular to handle pipe sections comprising three tubulars; the installation comprising:
- a pipe sections transport and storage system according to clause 25 or clause 26;
- a tower;
- a travelling head clamp;
- a hoisting device for the travelling head clamp, said hoisting device comprising:
    - one or more hoisting winches;
    - one or more hoisting cables driven by said one or more winches;
    - a crown block being mounted on said tower; and
    - a travelling block adapted to be lowered and lifted along the tower over a full vertical stroke between an uppermost level and a lowermost level, said travelling block carrying said travelling head clamp, wherein said travelling block is suspended from said crown block via said one or more hoisting cables,
- a hang off device, preferably a hang off clamp, adapted to support a previously launched pipeline, said hang off device being arranged at or in proximity of the lower level,
- a pipe section loader system adapted to advance a pipe section into a position in a firing line that extends in line with a previously launched pipeline supported by the hang off device,
wherein the installation is provided with a lower workstation that is arranged in proximity of the lowermost level, e.g. on a hull of the vessel or on a lower portion of the tower,
wherein the pipe section loader system is provided with a pivotal loader boom, that is pivotal about a horizontal pivot axis between a substantially horizontal loading position and a raised transfer position for upending a pipe section,
wherein the pivotal loader boom is provided with a set of pipe section grippers adapted to grip a pipe section.

33. A marine J-lay pipelaying installation according to clause 32, wherein the installation is provided with an upper workstation that is mounted on the tower halfway between the uppermost level and the lowermost level, said upper workstation being mobile mounted on the tower between an operative position and a retracted position,

wherein the set of pipe section grippers is an upper set of pipe grippers, and wherein the pivotable loader boom is furthermore provided with a lower set of pipe grippers to grip a pipe section in line with the pipe section gripped by the upper set of pipe grippers, such that the loader boom can upend two pipe sections at the same time.

34. Offshore vessel provided with a marine J-lay pipelaying installation according to clause 32 or clause 33.

35. Method for launching a string of pipe sections from an offshore vessel, e.g. a drilling vessel or a j-lay vessel, preferably a vessel according to one or more of the clauses 27-32, the method comprising:
- storing a bundle of the pipe sections, preferably pipe sections comprising three tubulars, in a storage crate on the offshore vessel;
- lifting a pipe section from the storage crate, transporting the pipe section to an up end device, e.g. a pivotable loader boom, preferably using a crane, and upending the pipe section to bring the pipe section into a firing line of a pipe section launch instalation , e.g. a tower for J-lay;
- connecting the pipe section to a string of pipe sections supported in the firing line; and
- lowering the string, the string comprising the connected pipe section, into the sea.

36. Method according to clause 35, the method further comprising
- on shore, combining multiple tubulars into pipe sections, preferably combining three tubulars into a pipe sections;
- storing the pipe sections in bundles in the storage crate on shore; and
- combining the storage crate with a top section into a transport crate, and transporting the transport crate with the bundle of the pipe sections onto the offshore vessel.

37. Method, preferably according to clause 35 or clause 36, for stacking a support crate according to one or more of the preceding clauses on top of another support crate, wherein the storage crates are provided with a high lateral support section at one side of the floor sections, and a low lateral support section on the opposite side of the floor sections, the method comprising the steps:
- combining the storage crate to be stacked upon the other storage crate with a top section into a transport crate, and lifting the transport crate with a crane;
- moving the transport crate in a lateral direction over a storage crate, such that the support frames of the transport crate engage the high lateral supports of the storage crate, and thus aligning the transport crate with the storage crate;

- lowering the transport crate on top of the storage crate; and
- uncoupling the top section from the storage crate stacked upon the other storage crate.

38. A marine pipeline installation vessel for laying an offshore rigid pipeline in the sea, onto the seabed, said vessel at least being adapted to carry out the rigid reel lay method, wherein the vessel comprises:
a hull and a deck;
a reel system comprising:
- a first vertical storage reel and a second vertical storage wheel, each for the storage of a spooled rigid pipeline to be laid, each storage reel comprising:
-a left and right vertical flange between which a hub extends; and
-a hub onto which multiple layers of pipeline, each layer comprising several windings of pipeline, can be stored;
- a reels support structure, wherein the reels support structure is supported by the hull of the vessel, and wherein the reels support structure rotatable supporting the first storage reel and the second storage reel, such that the first reel can be rotated about a first reel rotational axis and the second reel can be rotated about a second reel rotational axis;
- a first storage reel drive and a second storage reel drive to rotate the storage reels about their respective rotational axis;
a pipeline launch assembly mounted to the vessel downstream of the reels in a direction of unspooling, which pipeline launch assembly is adapted to launch unwound pipeline along a firing line into the sea, the pipeline launch assembly comprising:
a pipeline guide having an elongated pipeline guide member orientated in the direction of the storage reels and providing a circular or semi-circular pipeline guide surface, which pipeline guide is adapted to guide pipeline unwound from the storage reels over the pipeline guide into the firing line,
a straightener provided downstream of the storage reel in the direction of unspooling to provide straightening to the rigid pipeline;
at least one tensioner provided downstream of the pipeline guide which is adapted for engaging the pipeline in the firing line and supporting at least part of the weight of the launched pipeline to control the rate of laying of the rigid pipeline on the seabed; and
a pipeline support device adapted to support the weight of the launched pipeline in the firing line,
wherein the reels support structure further comprises:
a horizontal reels support axle, the axle having an axle body extending between a first axle end and a second axle end;

a first axle support and a second axle support, located on opposite sides of the storage reels, wherein the first axle support and the second axle support support the first axle end and the second axle end respectively,
wherein the support axle is adapted to support the first storage reel and the second storage reel while said axle is supported at the axle ends only, and wherein the support axle is adapted to support the first reel and the second reel at an angle relative to each other.

39. Vessel according to clause 38, wherein the axle is stationary, and the reels are each provided with at least one bearing, which bearing is mounted on the stationary axle to enable rotation of the respective reel about the stationary axle, wherein the bearing is a large diameter bearing, for example ha a diameter of more than 2 meters, preferably has an outer diameter similar to the inner dimeter of the hub body.

40. Vessel according to clause 38 or clause 39, wherein the reels are supported with their lower half in a shared reel storage hull, and wherein the first axle support structure and a second axle support structure are set up at opposite sides of the storage reels hull, such that the axle bridges the reel storage hull.

41. Vessel according to one or more of the clauses 38-40 wherein the two reels are arranged symmetrically to each other with respect to a vertical longitudinal mid-plane of the vessel.

42. Vessel according to one or more of the clauses 38-41, wherein the reals each have a mid-plane, midway between the flanks of the reel, the mid-plane extending perpendicular to the rotational axis of the respective reel.

43. Vessel according to clause 42, wherein the mid-planes of the reels intersect near a point where the pipe stored on either of the reels enters the straightener upon being unwound from the respective wheel.

44. Vessel according to clause 42, wherein the vessel has a water-entering zone, preferably a moonpool, at which the pipe to be laid enters the water, and wherein the mid-planes of the reels intersect forward of the water-entering zone of the vessel.

45. Vessel according to clause 42, wherein the mid-planes of the reels enclose an angle of more than 5 degrees, preferably more than 10 degrees, most preferably more than 15 degrees, for example 17 degrees, with respect to a vertical longitudinal mid-plane of the vessel.

46. Vessel according to one or more of the clauses 38-45, wherein the first reel rotational axis and the second reel rotational axis extend enclose an angle, which angle is less than 180 degrees, preferably is less than 170 degrees, for example 160 degrees.

47. Vessel according to one or more of the clauses 38-46, wherein the two reels have the same diameter.

48. Vessel according to one or more of the clauses 38-47, wherein the overall distance between the left and right support structures exceeds a half-width of the hull, preferably wherein the axle bridges the reel storage hull over a distance that exceeds a half width of the hull.

49. Vessel according to one or more of the clauses 38-48, wherein the pipeline guide member is movably supported via a pivot connection allowing an angular adjustment of the pipeline guide member.

50. Vessel according to one or more of the clauses 38-49, wherein the left and/or right support structure is also embodied to provide an upward translational movement of one or both ends of the horizontal reel axis.

51. Reel system for providing a vessel according to one or more of the clauses 38-50.

52. Method for rigid reel laying an offshore rigid pipeline on the seabed, said method comprising the step of using the vessel according to one or more of the clauses 38-50.

53. A method for marine J-lay pipelaying of an offshore pipeline on a seabed wherein use is made of a marine J-lay pipelaying installation, preferably of a vessel according to on eor more of the preceding clauses, the method comprising:
- a tower,
- a travelling head clamp,
- a hoisting device for the travelling head clamp, said hoisting device comprising:
- one or more hoisting winches,
- one or more hoisting cables driven by said one or more winches,
- a crown block being mounted on said tower,
- a travelling block adapted to be lowered and lifted along the tower over a full vertical stroke between an uppermost level and a lowermost level, said travelling block carrying said

travelling head clamp, wherein said travelling block is suspended from said crown block via said one or more hoisting cables,

- a hang off device, preferably a hang off clamp, adapted to support a previously launched pipeline, said hang off device being arranged at or in proximity of the lower level,

- a pipe section loader system adapted to advance a pipe section into a position in a firing line that extends in line with a previously launched pipeline supported by the hang off device,

wherein the installation is provided with an upper workstation that is mounted on the tower halfway between the uppermost level and the lowermost level, said upper workstation being mobile mounted on the tower between an operative position and a retracted position,

wherein the installation is provided with a lower workstation that is arranged in proximity of the lowermost level, e.g. on a hull of the vessel or on a lower portion of the tower,

wherein the pipe section loader system is provided with a pivotal loader boom, that is pivotal about a horizontal pivot axis between a substantially horizontal loading position and a raised transfer position,

wherein the pivotal loader boom is provided with a lower set of pipe section grippers and an upper set of pipe section grippers, wherein each of the lower set and the upper section of pipe section grippers is adapted to grip a respective pipe section having a length corresponding to half the full vertical stroke between the uppermost level and the lowermost level,

wherein the method comprises:

- a full vertical stroke mode operation wherein the loader boom simultaneously raises two pipe sections loaded thereon into the transfer position, said two pipe sections having a combined length corresponding to the full vertical stroke of the travelling block between the uppermost level and the lowermost level, preferably said two pipe section being joined to one another ahead of being raised into the transfer position, said two pipe sections then being advanced into the firing line and connected in the lower workstation to the uppermost end of the previously launched pipeline supported by the hang off device, optionally a pre-made join between the two pipe sections being treated, e.g. inspected and/or coated, in the upper workstation,

or

- a half stroke mode, wherein a single pipe section is loaded onto the loader boom and supported by the upper set of pipe grippers, said single pipe section having a length corresponding to the vertical stroke of the travelling block between the uppermost level and the upper workstation, and wherein said loader boom raises said single pipe section into the transfer position, said single pipe section being advanced into the firing line and connected in the upper workstation to the uppermost end of the launched pipeline supported by the hang off device.

54. A method for marine J-lay pipelaying of an offshore pipeline on a seabed wherein use is made of a marine J-lay pipelaying installation comprising:

- a tower,
- a travelling head clamp,
- a hoisting device for the travelling head clamp, said hoisting device comprising:
- one or more hoisting winches,
- one or more hoisting cables driven by said one or more winches,
- a crown block being mounted on said tower,
- a travelling block adapted to be lowered and lifted along the tower over a full vertical stroke between an uppermost level and a lowermost level, said travelling block carrying said travelling head clamp, wherein said travelling block is suspended from said crown block via said one or more hoisting cables,
- a hang off device, preferably a hang off clamp, adapted to support a previously launched pipeline, said hang off device being arranged at or in proximity of the lower level,

wherein the installation is provided with an upper workstation that is mounted on the tower halfway between the uppermost level and the lowermost level, said upper workstation being mobile mounted on the tower between an operative position and a retracted position,

wherein the installation is provided with a lower workstation that is arranged in proximity of the lowermost level, e.g. on a hull of the vessel or on a lower portion of the tower,

- a pipe section loader system adapted to advance two pipe sections into a position in a firing line that extends in line with a previously launched pipeline supported by the hang off device, a lower pipe section of the two being positioned between the lower workstation and the upper workstation and an upper pipe section of the two being positioned between the head clamp in its uppermost level and the upper workstation,

wherein the upper workstation is provided with a side wall, floor, and roof, and with a lateral access opening that extends over the height of the upper workstation to allow for lateral introduction of an upper portion of the lower pipe section and of a lower portion of the upper pipe section into the upper workstation and into the firing line, for example said lower and upper pipe section being joined to one another ahead of being introduced laterally into the upper workstation, e.g. the joint being inspected and/or coated in the upper workstation.

reference signs

01 pipe sections transport and storage assembly
02 storage crate
03 top section
04 transport crate
05 pipe sections
06 pipe section support frame
07 spacer frame
08 floor section
09 lateral support section
10 support surface
11 U-shaped support frame
12 vessel
13 J-lay installation
14 openings for receiving a top end of a lateral support
15 coupling teeth
16 gyro
17 hinges
18 gyro support frame
19 couple fingers floor section
20 recess for receiving coupling finger
21 storage crate storage deck
22 grid mounts
22' storage crate short
25 pipe sections short
26 guide pillars
27 spacer frame, short
28 wall surface storage hull
31 first storage reel
32 second storage reel
33 support axle
34 reel storage hull
40 recess for receiving eye other storage crate
41 eye for coupling with top section
42 mount for spacer frame
43 eye/mount on top section for hoisting

44 bumpers for engaging lateral support sections
101 moonpool
102 crown block support structure
103a, b legs tower
107 firing line
116 hoisting cables
120 crown block
130 travelling block
131 hang-off clamp carrier
132 support track
133 rails support track / hang off clamp rails
134 garage
135 PLET guide rails, extended
135' PLET guide rails, retracted
140 travelling head clamp
150 hang off device / hang off clamp
160 upper work station
170 lower workstation
205 pivotal loader boom
250 aligner wheel
270 pipeline tensioner
300 trolley mounted flex-lay guide wheel
301 trolley supporting flex-lay guide wheel
302 deck vessel
303 tubing
304 storage reel
305 deck mounted track for trolley
306 tower mounted track for trolley
307 deck support part of the trolley
308 tower support part of the trolley

CLAIMS

1. Pipe sections transport and storage assembly for transporting and storing pipe sections, preferably long pipe sections, the assembly comprising a storage crate for storage of pipe sections, and a crate top section for in combination with the storage crate defining a box like transport crate, the transport crate having sufficient rigidity to enable transport of the pipe sections,

wherein the storage crate comprises:

- two pipe sections support frames, the pipe section support frames each comprising a floor section and two lateral support sections, wherein the floor sections have a support surface for supporting pipe sections stored in the storage crate and wherein the lateral support sections in a support position extend perpendicular to the floor section, such that the floor section and the lateral support sections together define a U-shaped support frame for holding a bundle of pipe sections; and
- a spacer frame, releasable connecting the pipe sections support frames at a distance for supporting pipe sections, preferably releasable connecting the floor sections below the pipe sections support surface;

wherein the crate top section is configured for releasable connecting the support frames, preferably for releasable connecting with the lateral support sections of the pipe sections support frames, to thus, in combination with the two pipe sections support frames and the pipe sections spacer frame, define a box like transport crate wherein preferably the spacer frame and the top section extend on opposite sides of a bundle of pipe sections held in the support frames; and

wherein the top section comprises one or more mounts for coupling the top section with a crane, to enable the pipe section transport crate to be lifted by the crane, e.g. to be lifted by a crane from a quay onto a vessel of vice versa.

2. Transport and storage assembly according to claim 1, wherein lateral support sections of the support frames are, at a top end therefore, configured to couple with a support frame of another storage crate according to claim 1, preferably with the floor section of the support frame of the other pipe sections storage crate, to enable stacking of support frames, and thus stacking of multiple storage crates.

3. Transport and storage assembly according to claim 1 or claim 2, wherein the floor sections of the support frames are configured to couple with, e.g. to fittingly engage, a support frame of another pipe sections storage crate, preferably with the top end of the lateral support

sections of the support frames of the other pipe sections storage crate, to enable stacking of support frames, and thus stacking of crates.

4. Transport and storage assembly according to claim 3, wherein the floor sections have openings for receiving a top end of a lateral support section of another storage crate according to claim 1.

5. Transport and storage assembly according to one or more of the preceding claims, wherein for each support frame, the lateral support section at one side of the floor sections is a high lateral support section, and the lateral support section on the opposite side of the floor section is a low lateral support section, and wherein the high lateral support section is configured to engage the support frame of another pipe sections storage crate at a side thereof, to facilitate positioning the other pipe sections storage crate and thus stacking of the other pipe sections support crate on top of the pipe sections support crate.

6. Transport and storage assembly according to claim 4 and claim 5, wherein the floor sections have openings for receiving the top end of a lateral support section of another storage crate by moving the floor section in a lateral direction, i.e. in a direction parallel to the support surface of the floor section, relative to the top end of the lateral support section of the other storage crate.

7. Transport and storage assembly according to one or more of the preceding claims, wherein the top section is provided with a vertical or upright gyro, i.e. a gyro for spinning about a horizontal axis, in line with a centre of gravity of the top section, for, when the top section is supported by a crane, stabilizing the top section, e.g. preventing unwanted pivoting of the top section about a vertical axis.

8. Transport and storage assembly according to one or more of the preceding claims, wherein the floor sections of the support frames are configured to couple with floor sections of another storage crate.

9. Transport and storage assembly according to one or more of the preceding claims, wherein the floor sections of the storage crate are configured to be coupled with mounts provided on a deck or in the hull of a vessel.

10. Transport and storage assembly according to one or more of the preceding claims, wherein the pipe sections transport crate can be configured for transporting short pipe sections and for transporting long pipe sections,
wherein the spacer frame is a long pipe section spacer frame for releasable connecting the pipe sections support frames at a first distance for transporting long pipe sections, and
wherein the crate top section is a long crate top section that is configured for releasable connecting the support frames at the first distance, to thus, in combination with the two pipe sections support frames and the long pipe sections spacer frame, define the box like transport crate with a long pipe sections transport configuration;
wherein the transport and storage assembly further comprises:
- a short pipe sections spacer frame, for releasable connecting the pipe sections support frames at a second distance for transporting short pipe sections, preferably for releasable connecting the floor sections below the tubular support surface; and
- a short top section, wherein the short crate top section is configured for releasable connecting the support frames, preferably for connecting with the lateral support sections of the pipe sections support frames, at the second relative distance, to thus, in combination with the two pipe sections support frames and the short pipe sections spacer frame, define the box like transport crate with a short pipe sections transport configuration, and
wherein the short top section comprises one or more mounts for coupling the top section with a crane, to enable the pipe section transport crate to be lifted by the crane, e.g. to be lifted by a crane from a quay onto a vessel of vice versa.

11. Transport and storage assembly according to claim 10, wherein the first distance is shorter than half the second distance, preferably is less than a quarter of the second distance.

12. Storage crate, the storage crate comprising the two pipe sections support frames and the pipe sections spacer frame according to one or more of the claims 1-11

13. Pipe section transport and storage system, the transport and storage system comprising:
- multiple storage crates according to one or more of the claims 1-11; and
- at least on top section according to one or more of the claims 1-11.

14. Pipe section transport and storage system, comprising pipe sections transport crates that can be configured for transporting short pipe sections and for transporting long pipe sections, the transport and storage system comprising:
- at least four pipe section support frames according to one or more of the claims 1-11;

- at least one short top section according to one or more of the claims 10-11;
- at least one long top section according to one or more of the claims 10-11;
- at least one short spacer frame according to one or more of the claims 10-11; and
- at least one long spacer frame according to one or more of the claims 10-11.

15. Offshore vessel, e.g. a drilling vessel or a pipe lay vessel, the vessel comprising:
- a pipe sections transport and storage system according to claim 13 or claim 14;
- a pipe section launch tower, e.g. a drilling tower or a J-lay tower, comprising a firing line;
- a pipe section up-end device;
- a storage crate storage deck, e.g. in a storage hull, for supporting stacks of pipe sections storage crates; and
- a pipe section transport crane, for moving a pipe section from a pipe sections storage crate located at the storage crate storage deck, to the pipe section up end device.

16. Offshore vessel according to claim 15, wherein the storage deck is provided with a grid of mounts, which mounts are configured to be coupled with corresponding coupling devices provided in the floor sections of the pipe sections storage crates, to lock the storage crates in place.

17. Offshore vessel according to claim 15 or claim 16, wherein the storage deck is provided with a grid of mounts, which mounts are spaced for receiving floor sections between them such that they secure the floor sections, and thus the storage crates, against a sliding movement over the deck.

18. Offshore vessel according to claim 16 and claim 16, wherein the short spacer frame and the long spacer frame are dimensioned such that the mounts of the grid can be coupled with both the floor sections of a storage crate for short pipe sections and the floor sections of a storage crate for long pipe sections; or
Offshore vessel according to claim 16 or claim 17, wherein the deck mounts are spaced for supporting adjacent rows of support crates, preferably such that creates of one row are adjacent to the crates of another row, and preferably the floor sections of the adjacent crates are coupled.

19. Offshore vessel according to one or more of the claims 15-18, wherein the vessel comprises support frame guide pillars, e.g. mounted on the storage deck or along a wall surface of a storage hull, which guide pillars are configured to cooperate with the support frames, more in particular with guide sections in the floor sections and/or the support

sections, for engaging the support frame in a lateral direction, and guiding the engaged support frame in a vertical direction, to facilitate positioning the support frames, and thus the transport crates, while being lowered by crane onto the storage deck, and preferably correctly position the floor sections correctly relative to mounts provided on the storage deck.

20. Method for launching a string of pipe sections from an offshore vessel, e.g. a drilling vessel or a j-lay vessel, preferably a vessel according to one or more of the claims claim 15-19, the method comprising:
- storing a bundle of the pipe sections, preferably pipe sections comprising three tubulars, in a storage crate on the offshore vessel;
- lifting a pipe section from the storage crate, transporting the pipe section to an up end device, e.g. a pivotable loader boom, preferably using a crane, and upending the pipe section to bring the pipe section into a firing line of a pipe section launch instalation , e.g. a tower for J-lay;
- connecting the pipe section to a string of pipe sections supported in the firing line; and
- lowering the string, the string comprising the connected pipe section, into the sea.

21. Method according to claim 20, the method further comprising
- on shore, combining multiple tubulars into pipe sections, preferably combining three tubulars into a pipe sections;
- storing the pipe sections in bundles in the storage crate on shore; and
- combining the storage crate with a top section into a transport crate, and transporting the transport crate with the bundle of the pipe sections onto the offshore vessel.

22. Method, preferably according to claim 20 or claim 21, for stacking a support crate according to one or more of the preceding claims on top of another support crate, wherein the storage crates are provided with a high lateral support section at one side of the floor sections, and a low lateral support section on the opposite side of the floor sections, the method comprising the steps:
- combining the storage crate to be stacked upon the other storage crate with a top section into a transport crate, and lifting the transport crate with a crane;
- moving the transport crate in a lateral direction over a storage crate, such that the support frames of the transport crate engage the high lateral supports of the storage crate, and thus aligning the transport crate with the storage crate;
- lowering the transport crate on top of the storage crate; and
- uncoupling the top section from the storage crate stacked upon the other storage crate.

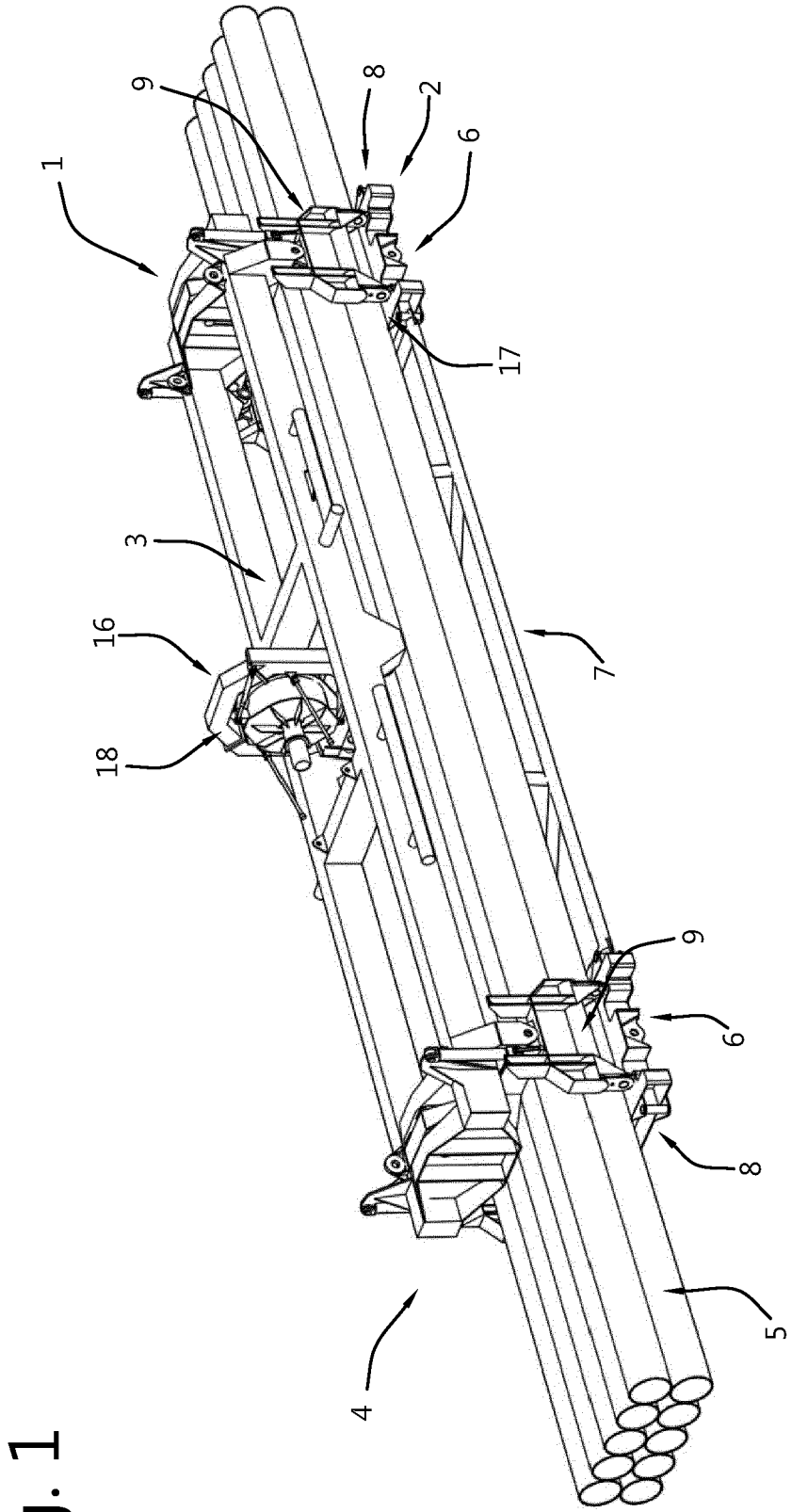

Fig. 1

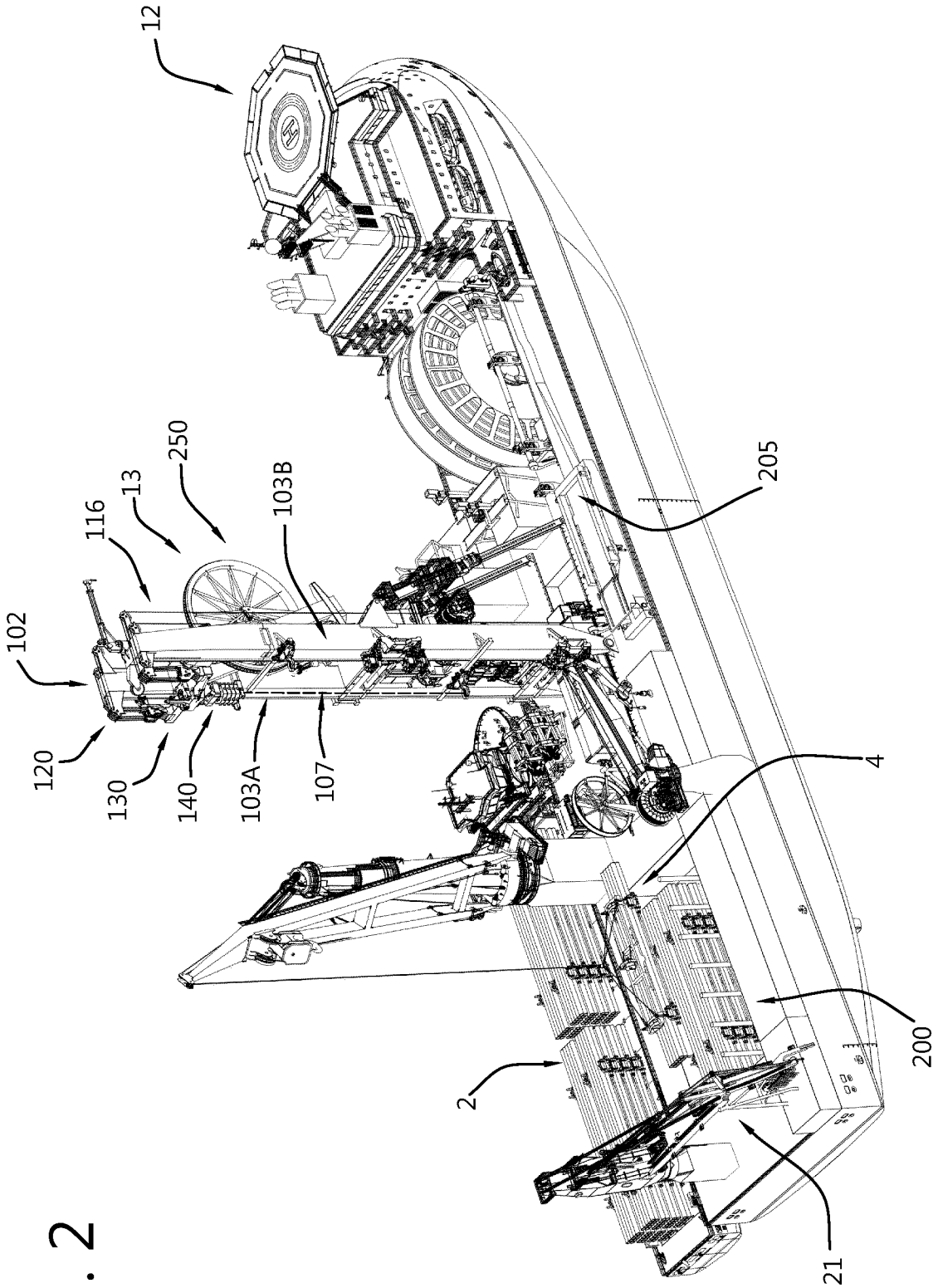

Fig. 2

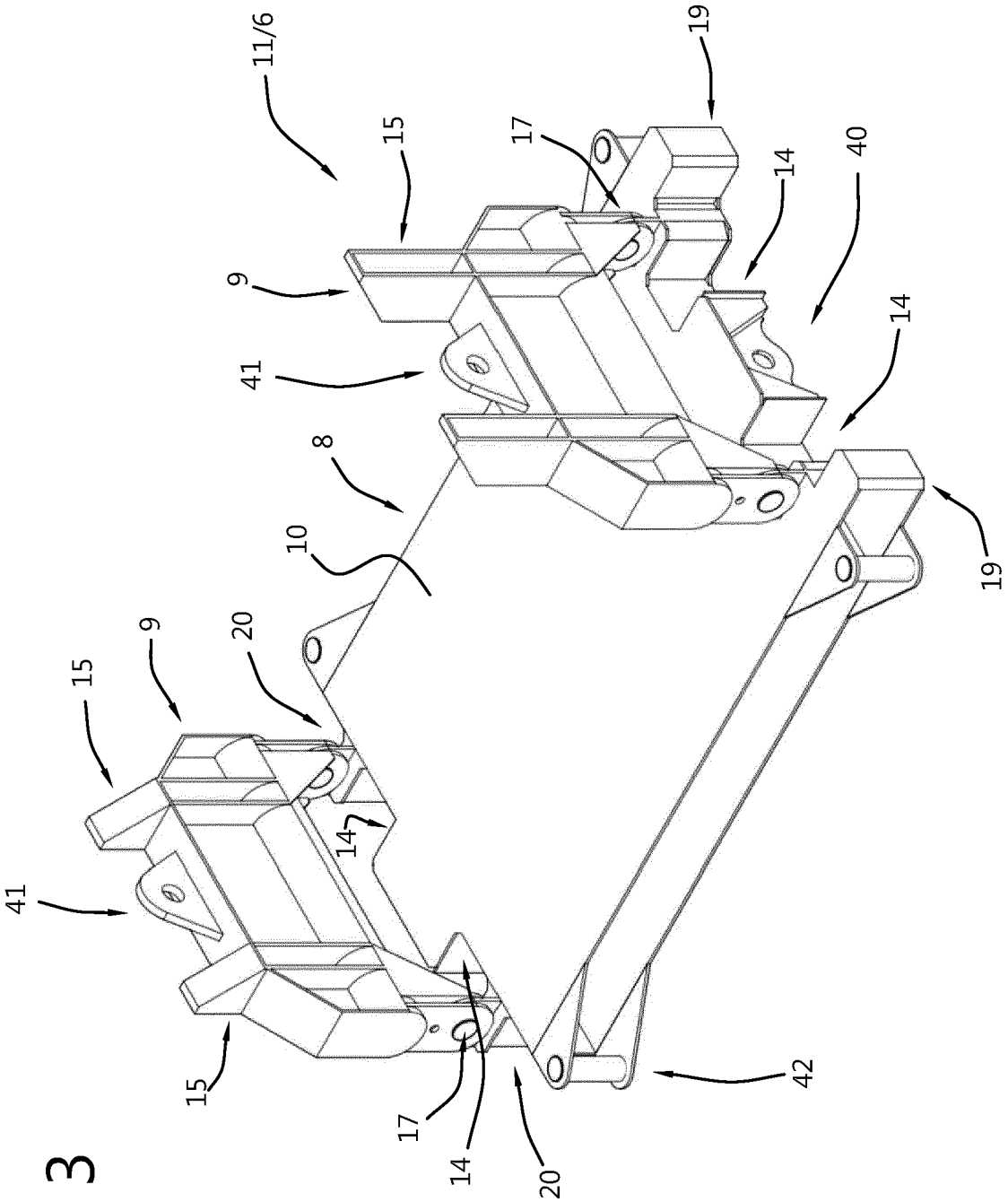

Fig. 3

Fig. 4

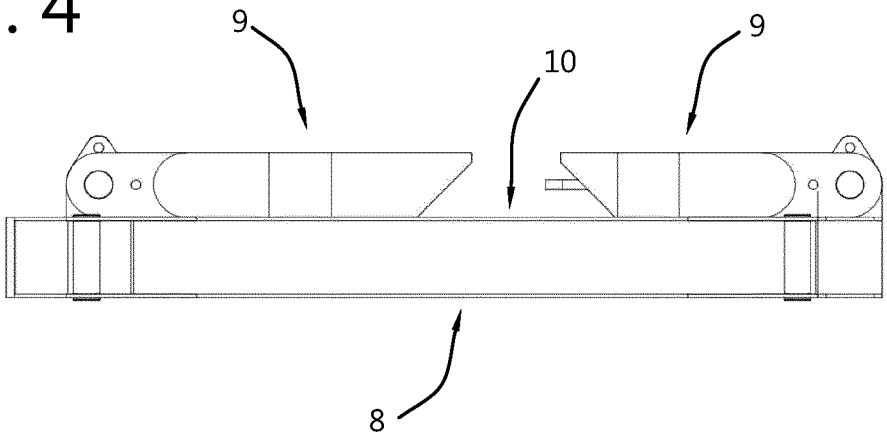

Fig. 5

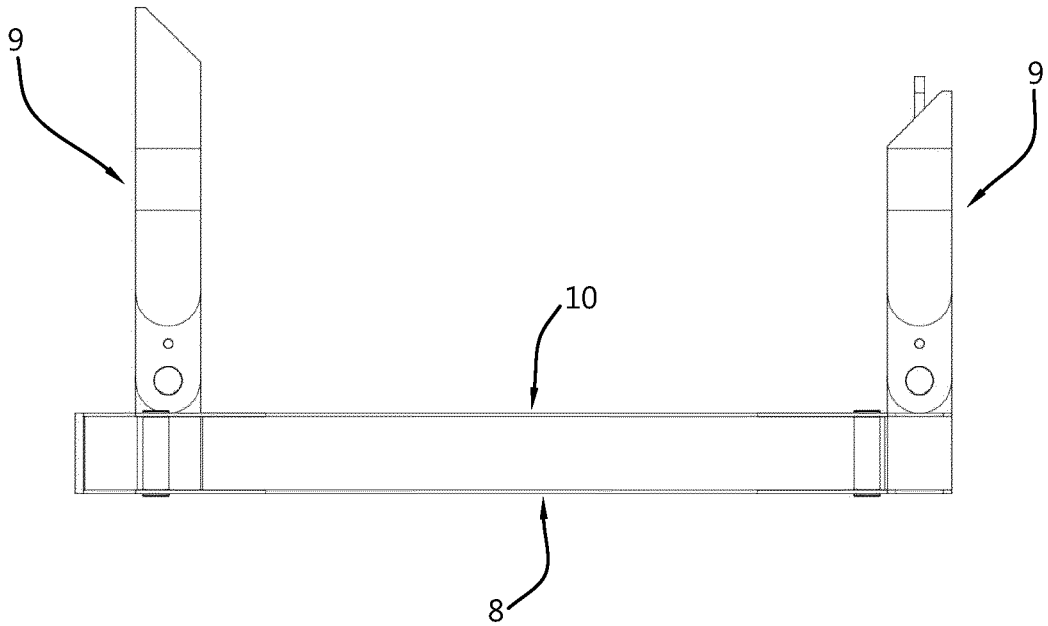

Fig. 6

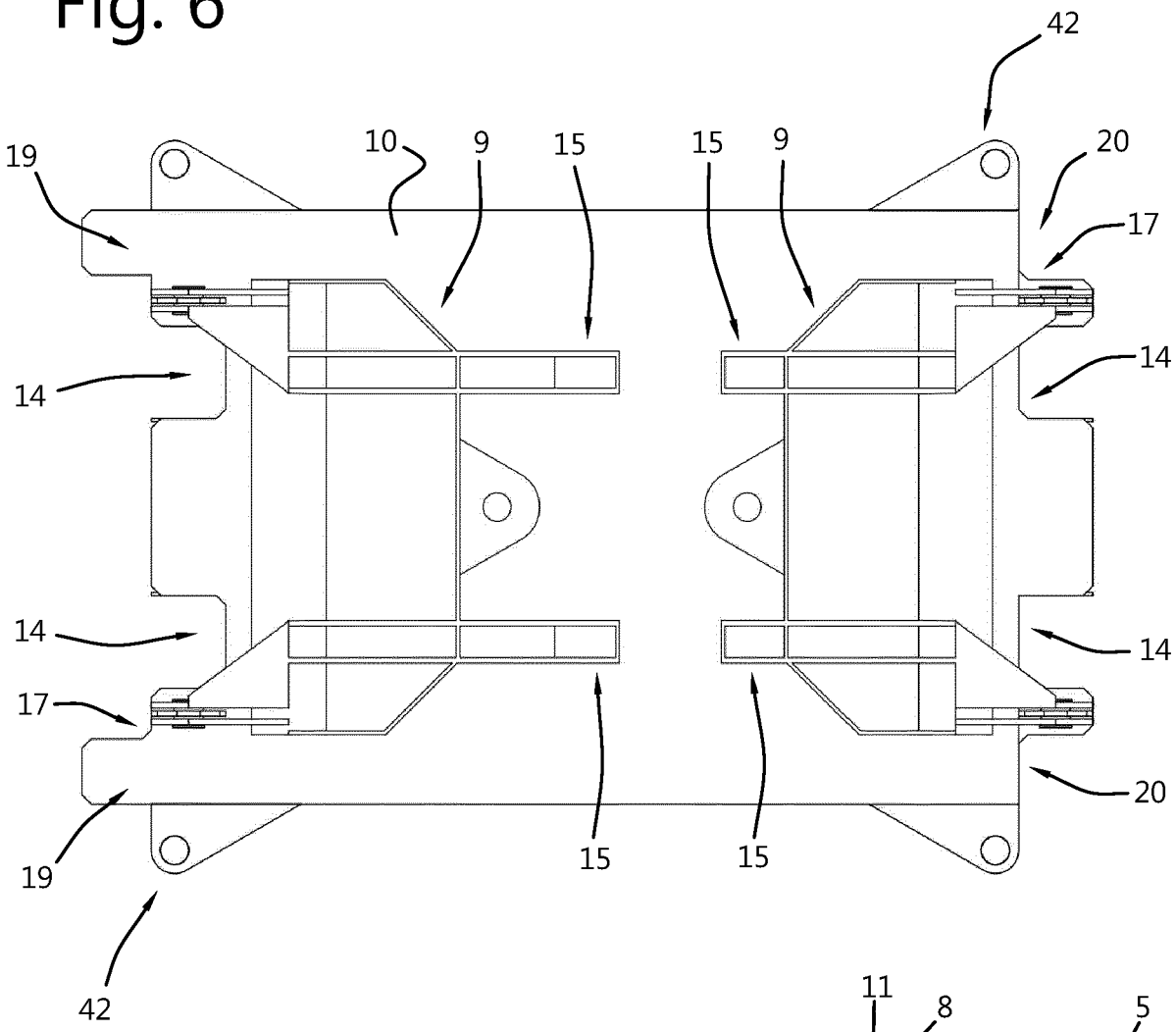

Fig. 7

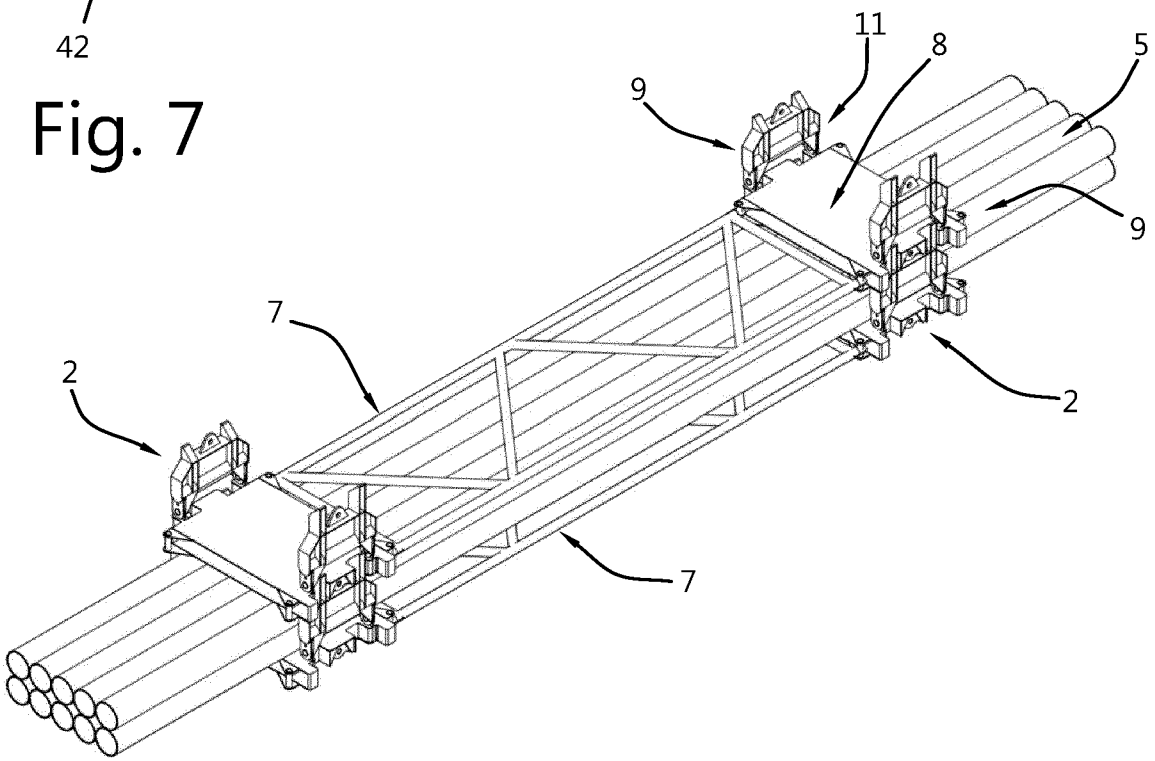

Fig. 8

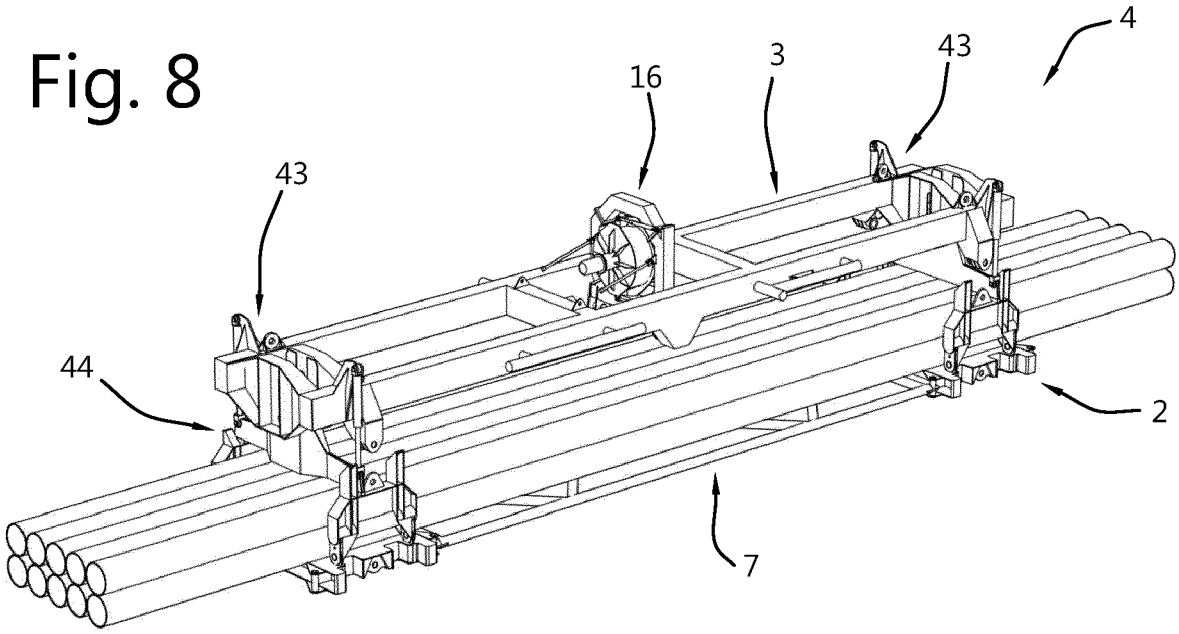

Fig. 9

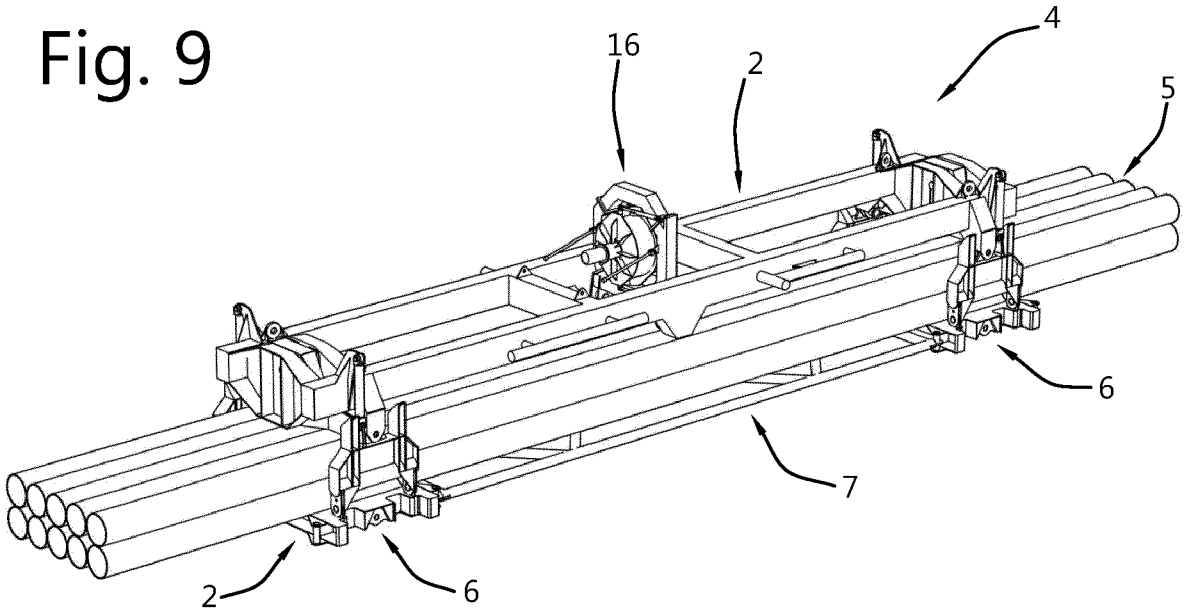

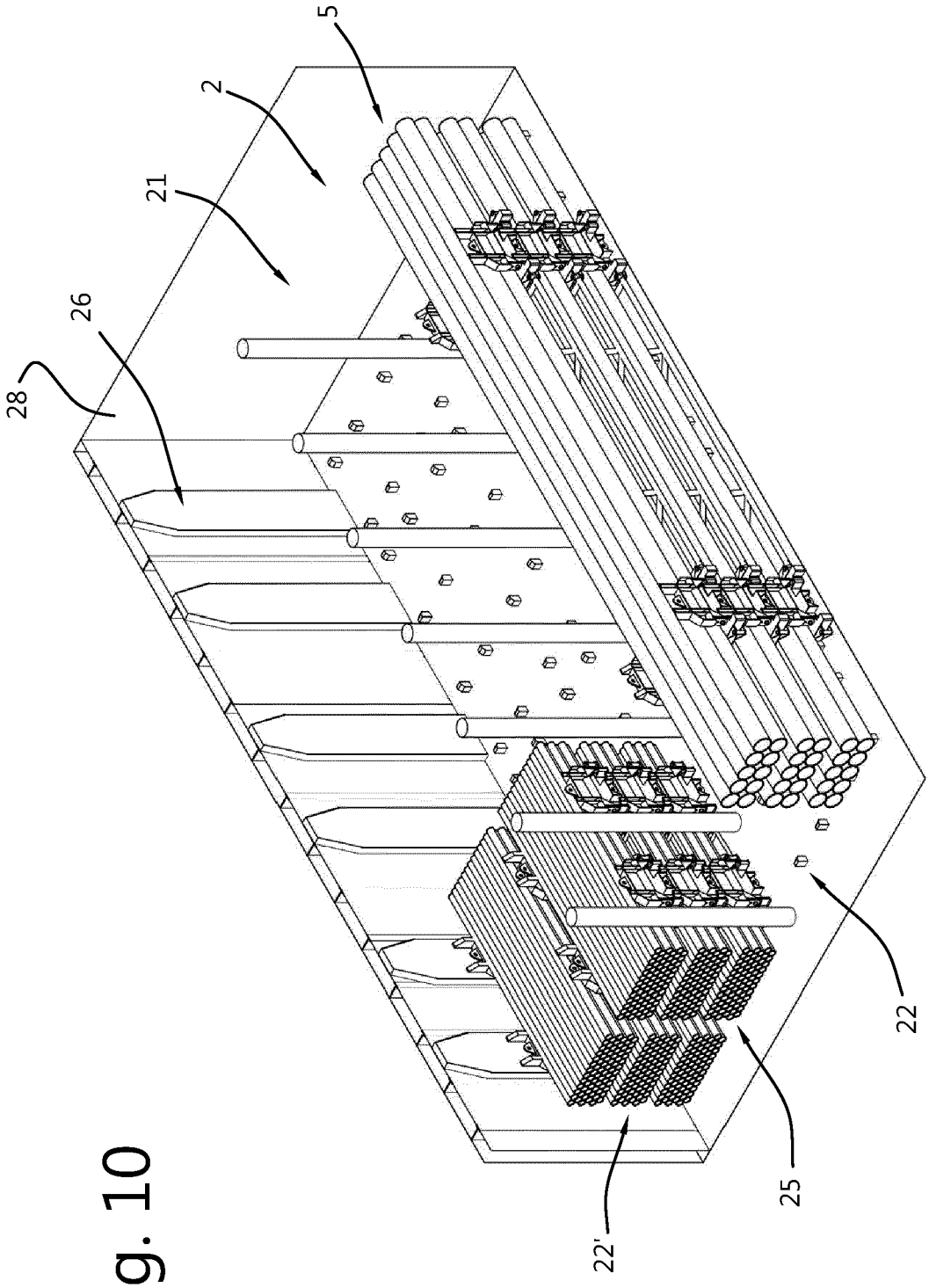

Fig. 10

Fig. 11

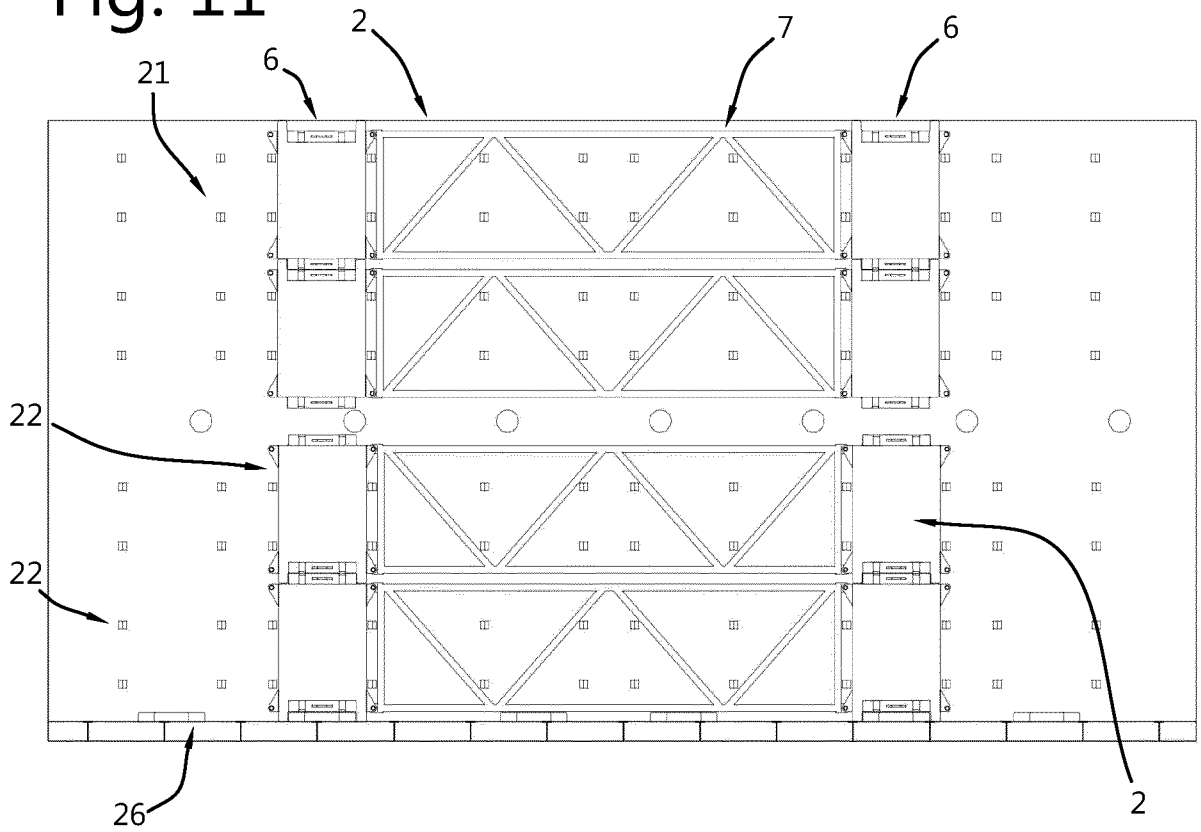

Fig. 12

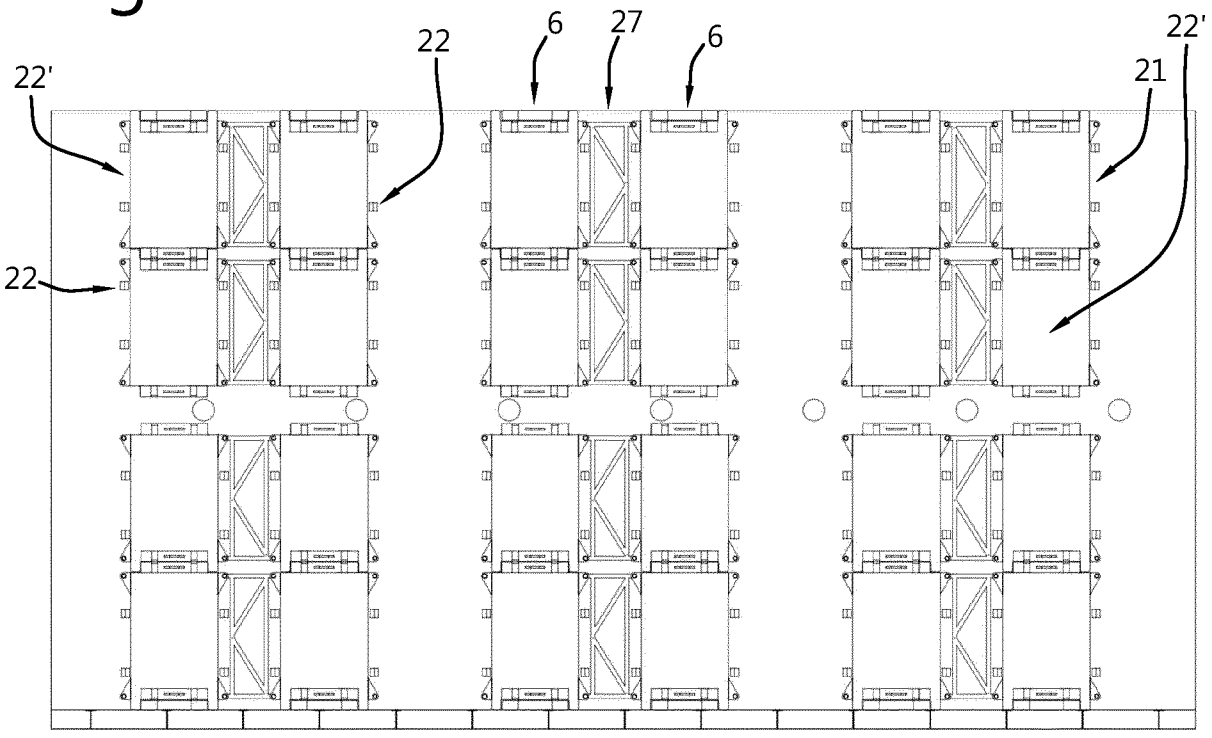

Fig. 13

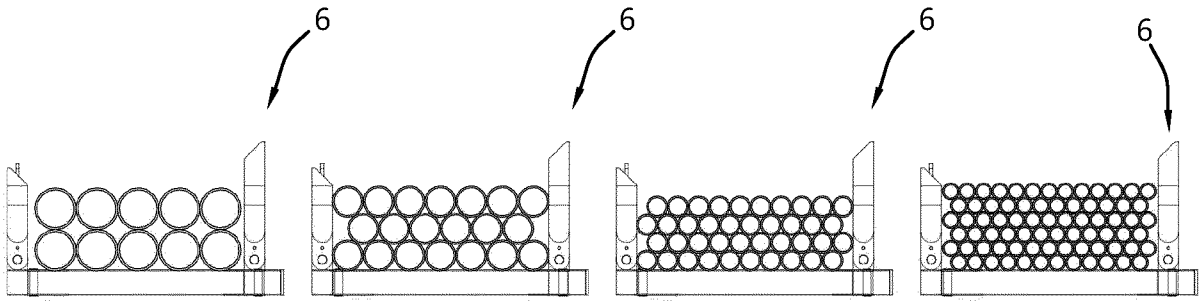

Fig. 14

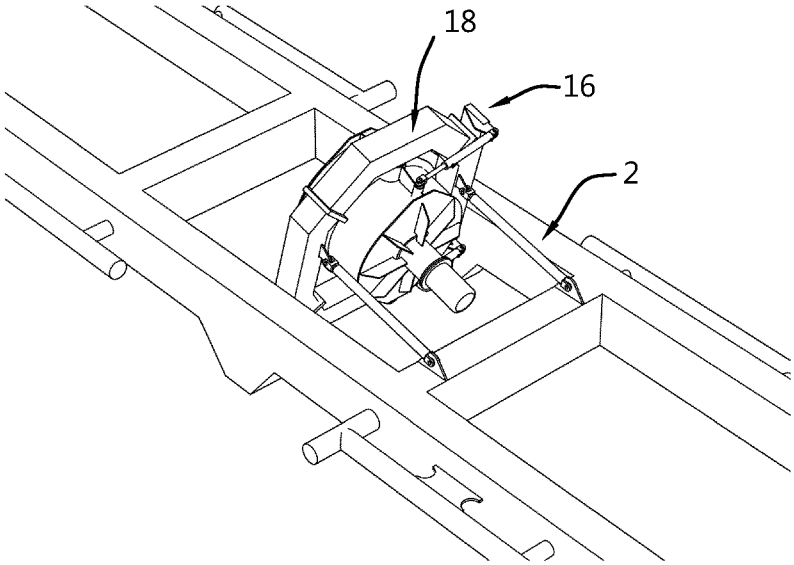

Fig. 15

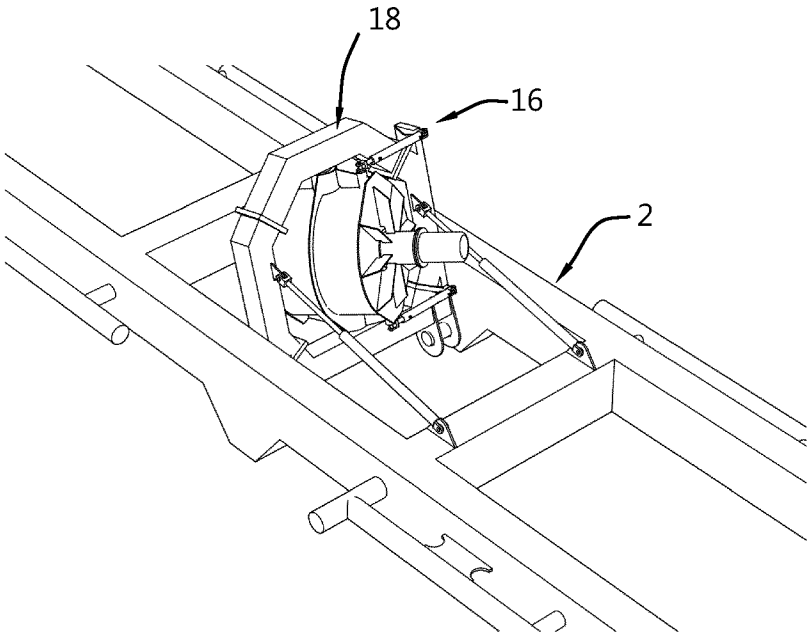

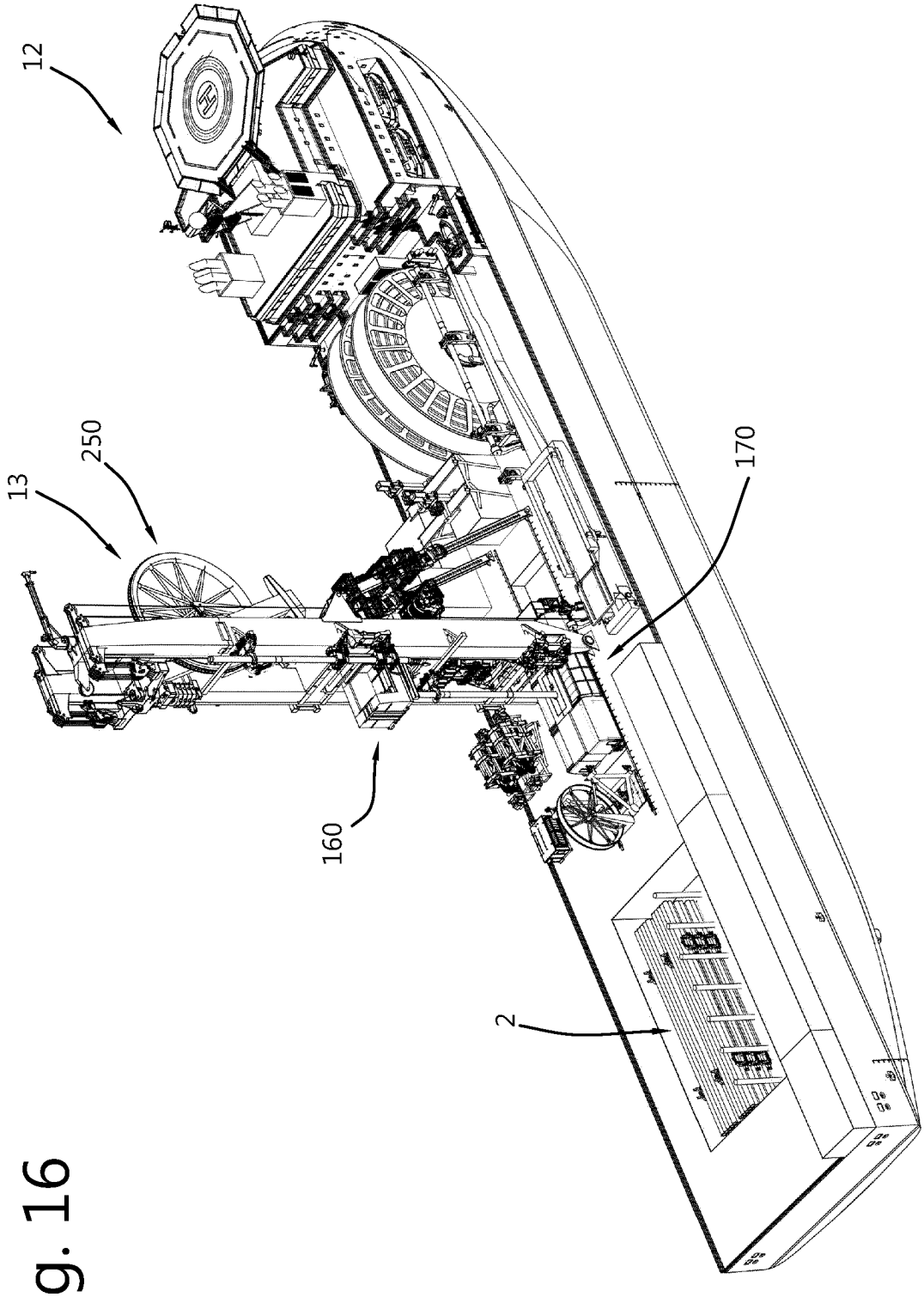

Fig. 16

Fig. 17

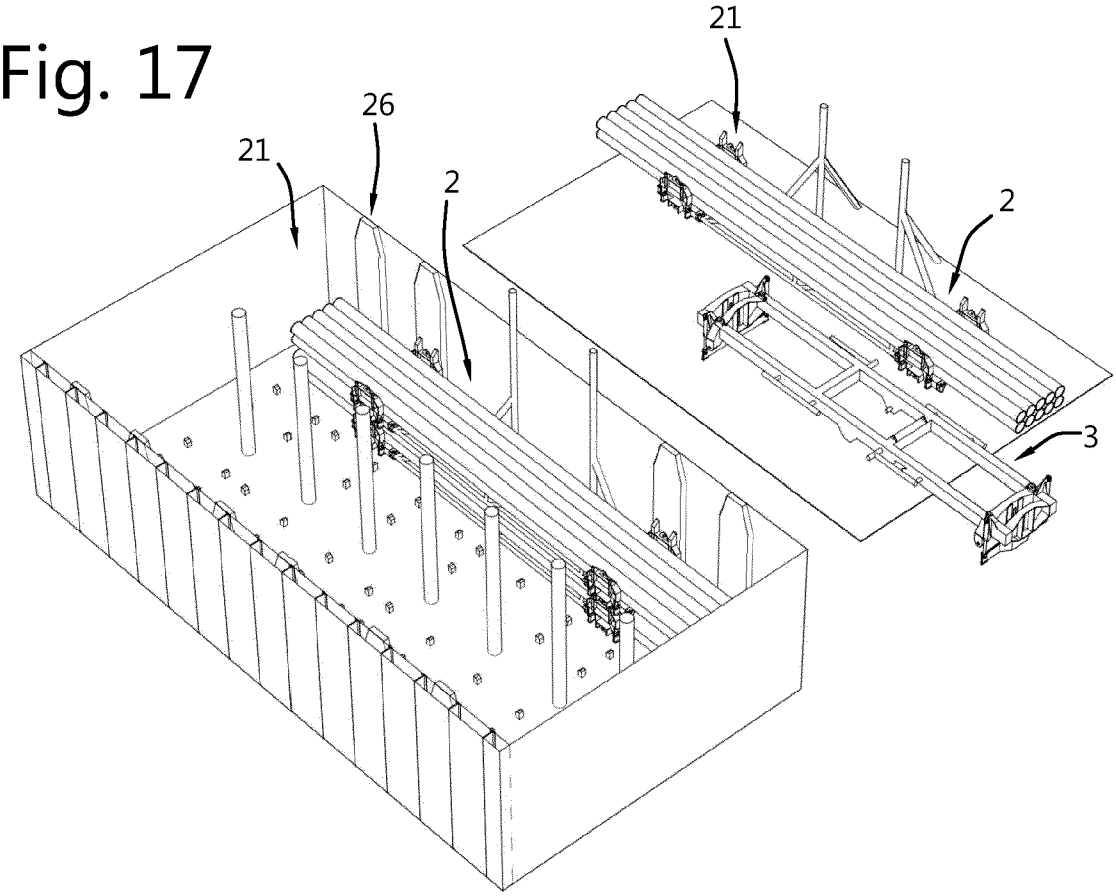

Fig. 18

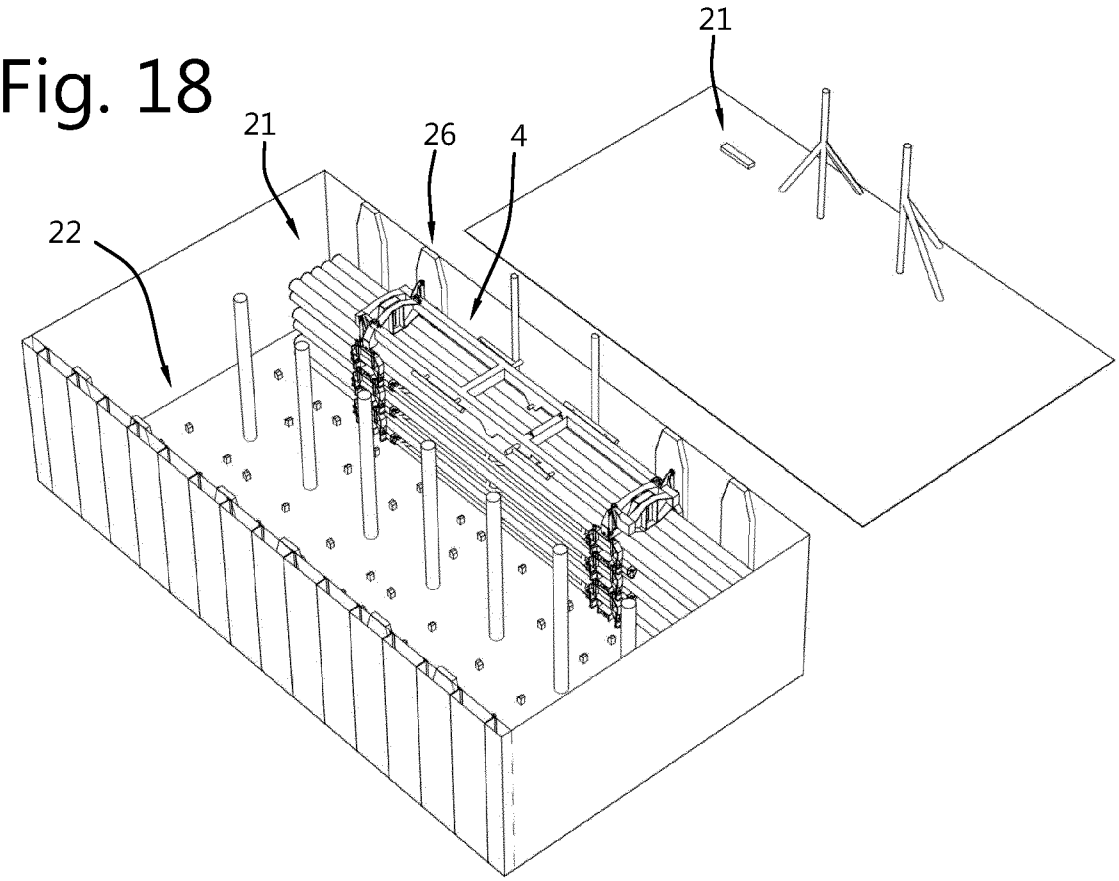

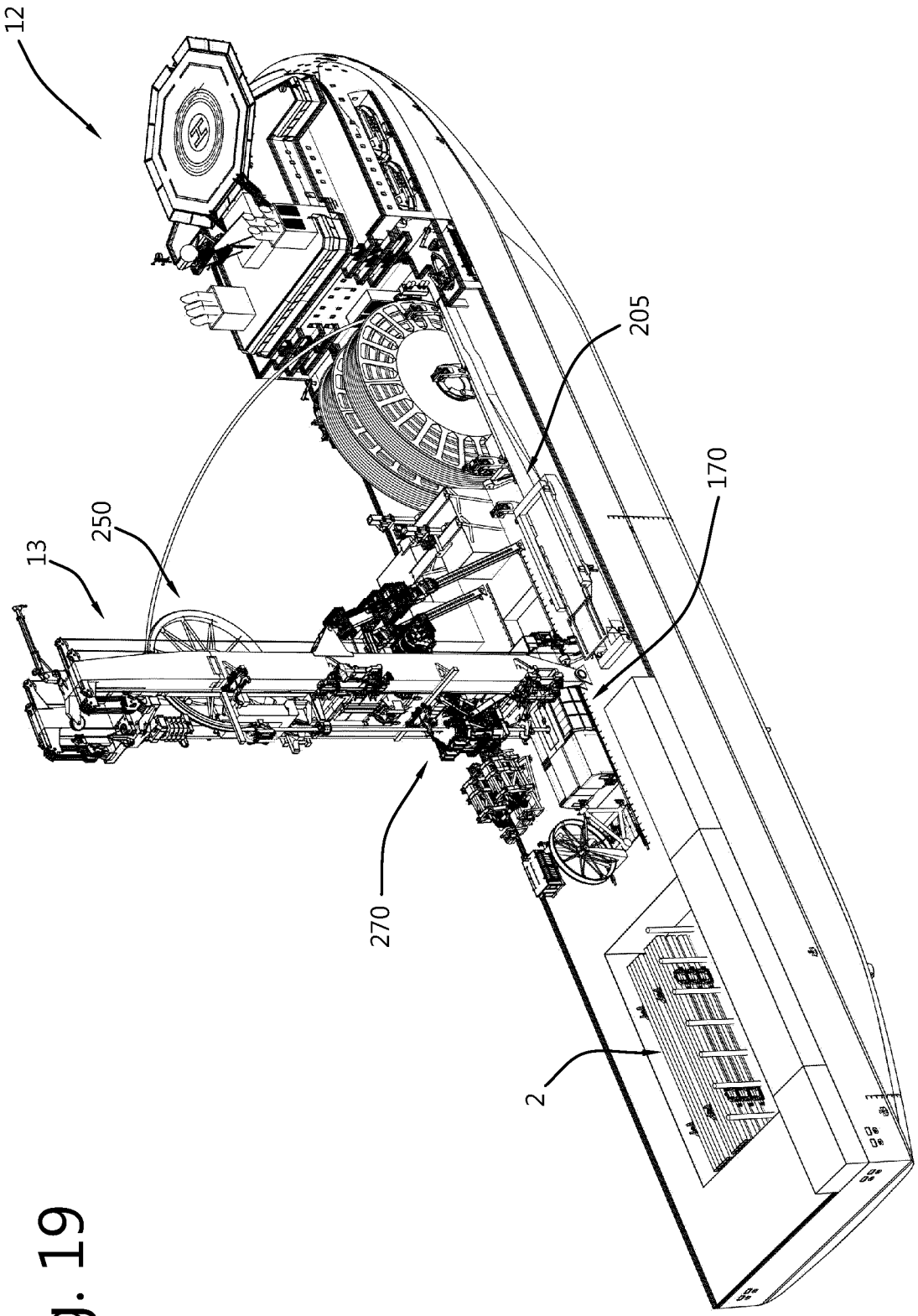

Fig. 19

Fig. 20

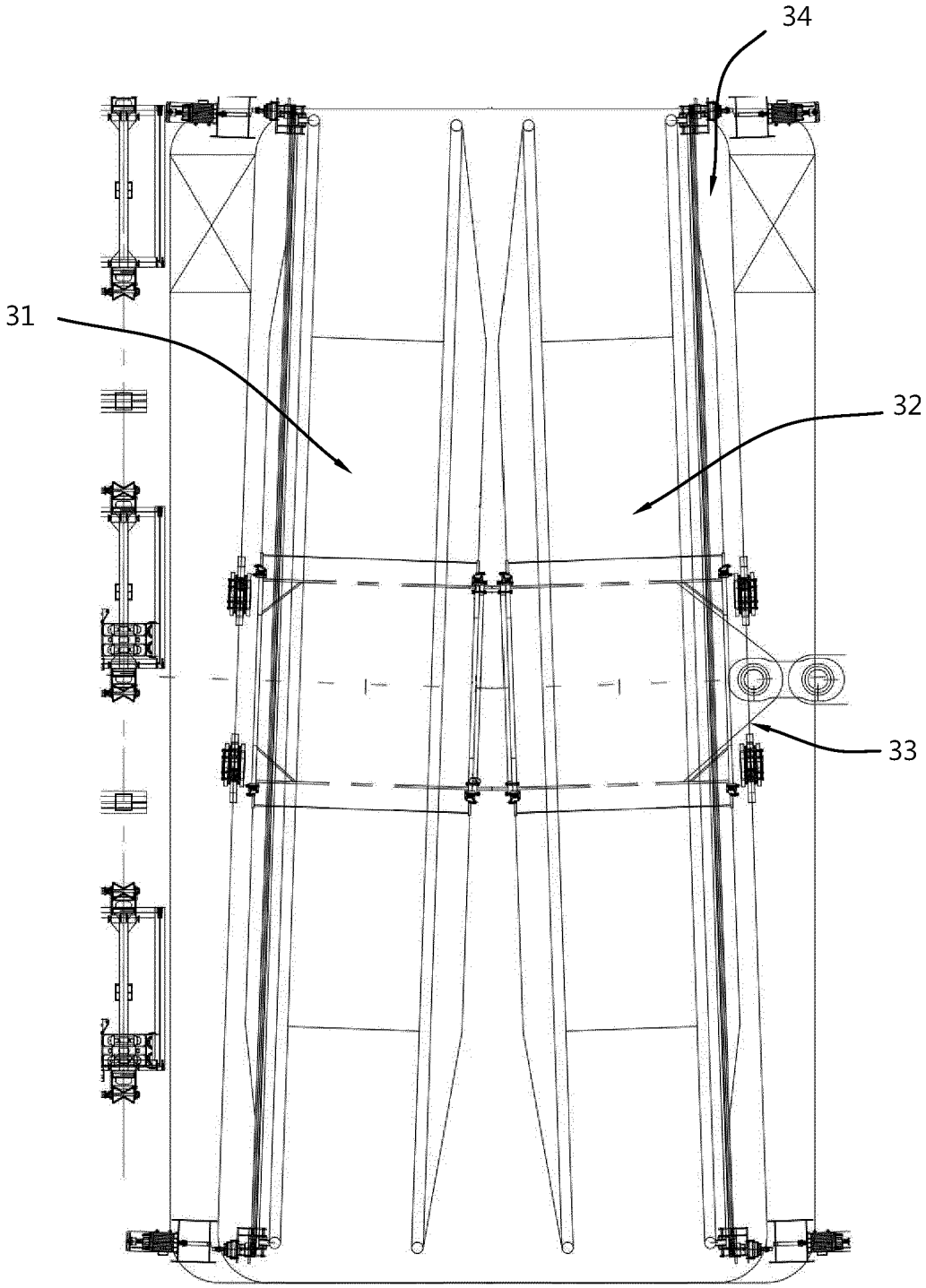

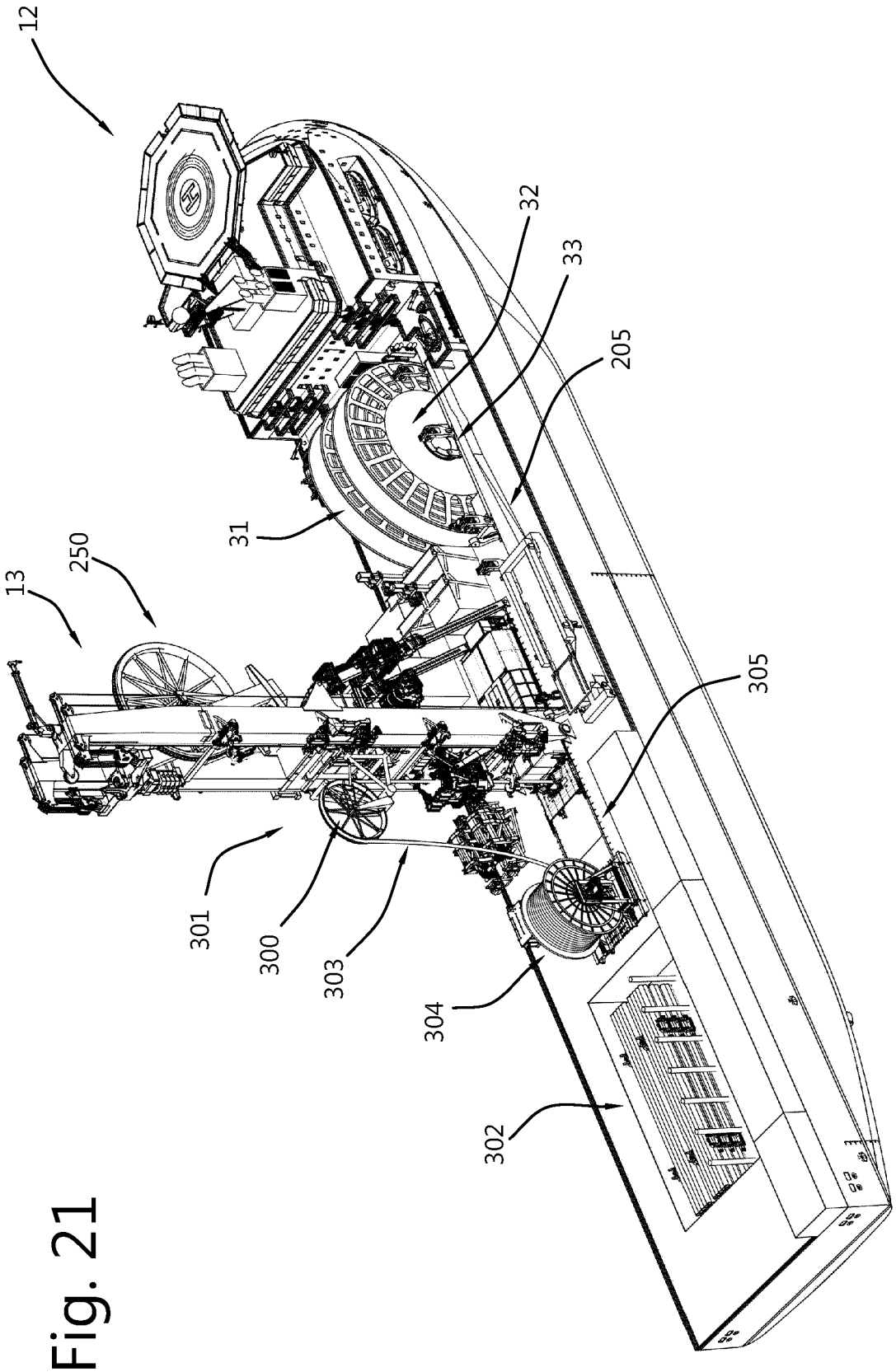

Fig. 21

Fig. 23

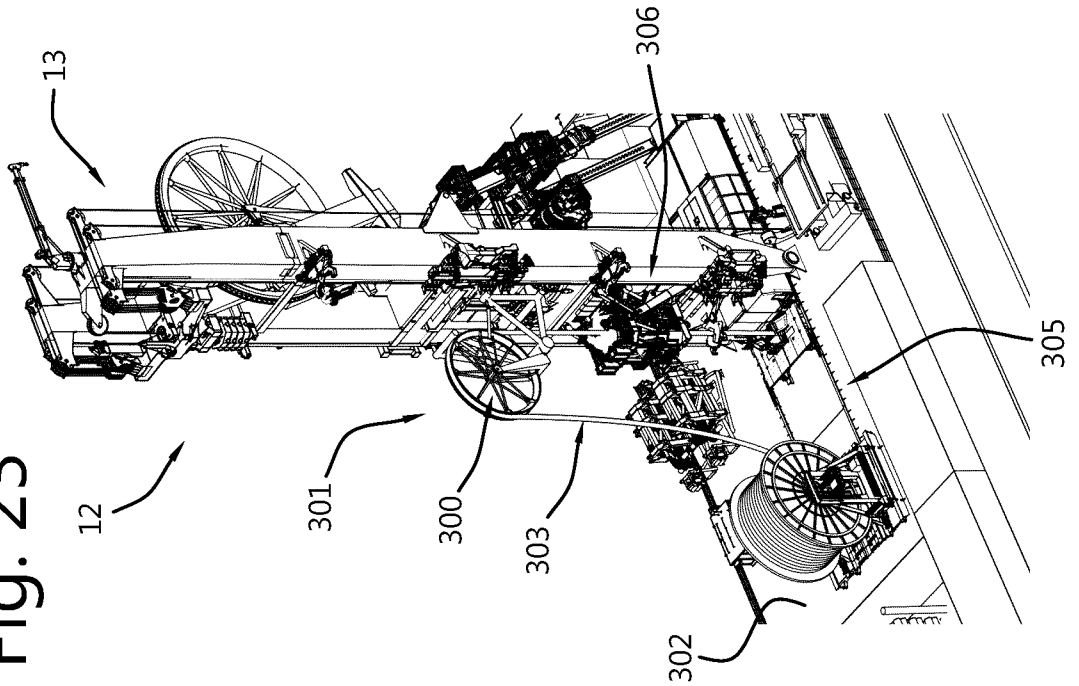

Fig. 22

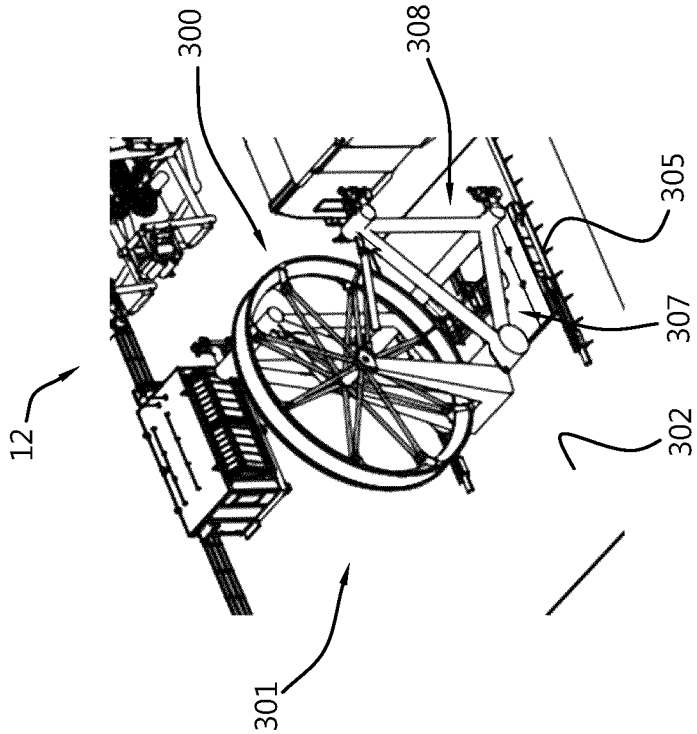

Fig. 25

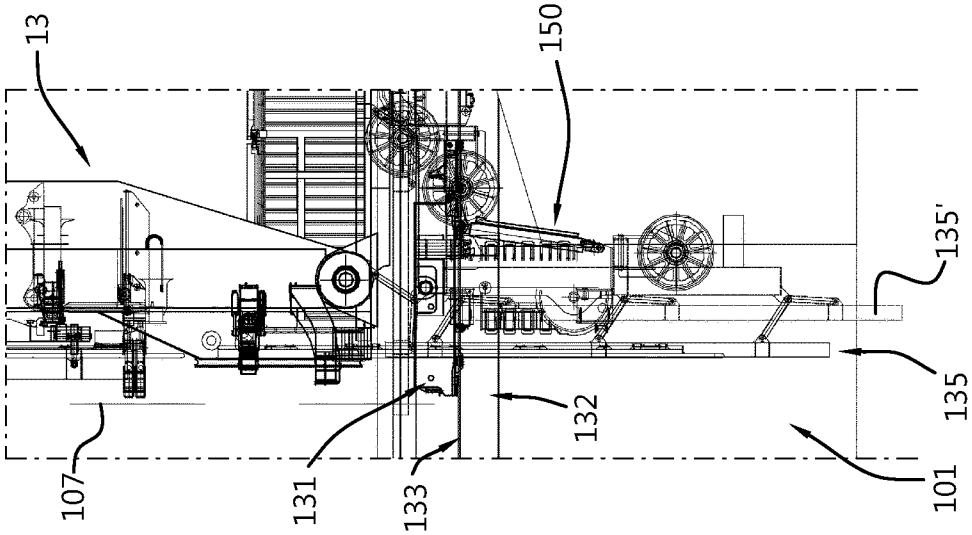
13
150
135'
135
132
107
131
133
101

Fig. 24

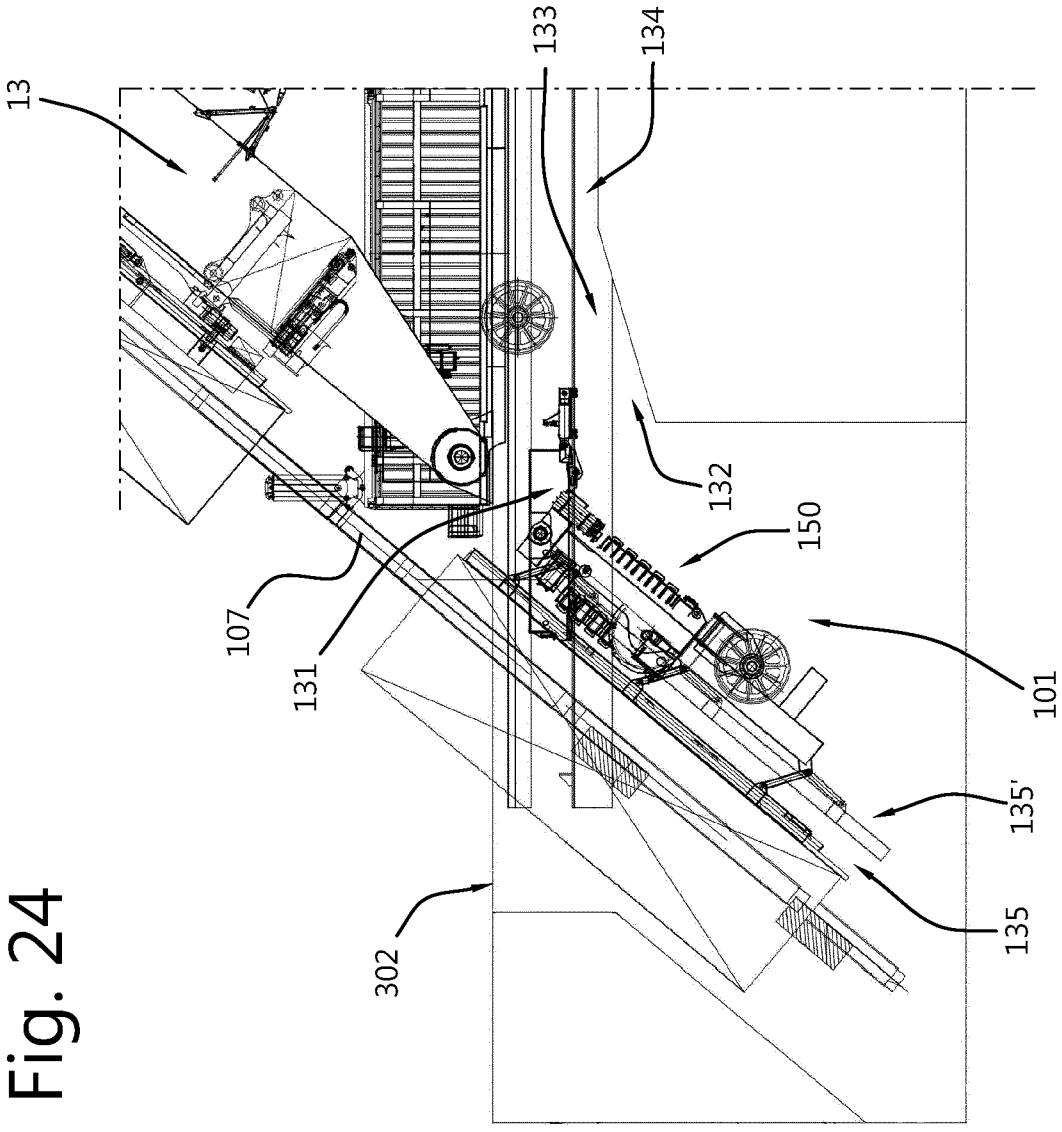
13
133
134
132
150
107
131
101
135'
135
302

Fig. 26

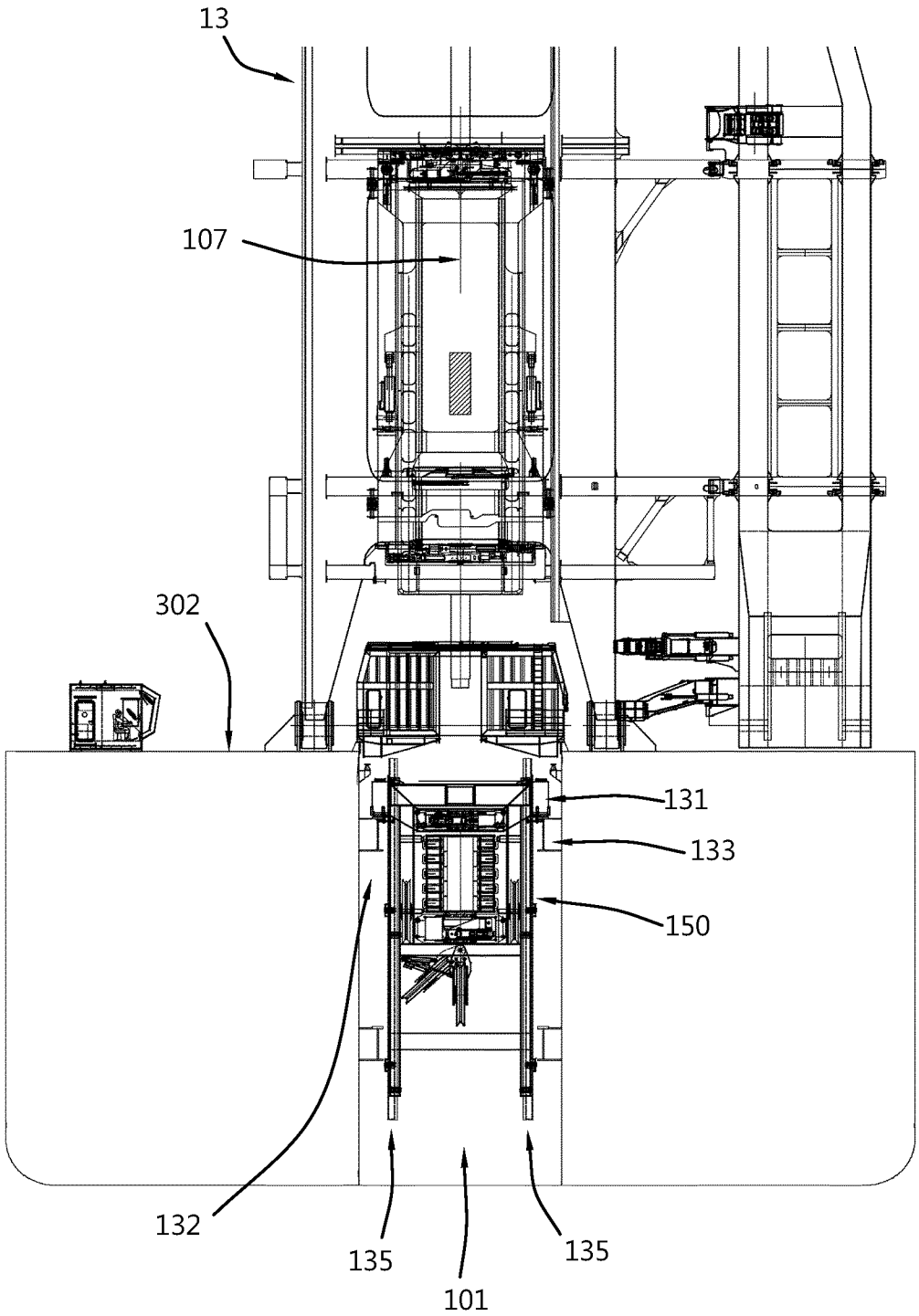

INTERNATIONAL SEARCH REPORT

International application No
PCT/EP2020/071031

A. CLASSIFICATION OF SUBJECT MATTER
INV. F16L1/16 B63B35/03 B65H75/42 F16L1/19 F16L1/20
B65G1/04 B66C1/66 E21B19/14 E21B19/15
ADD.
According to International Patent Classification (IPC) or to both national classification and IPC

B. FIELDS SEARCHED

Minimum documentation searched (classification system followed by classification symbols)
F16L B63B B65H B63J E21B B65G B66C B66F

Documentation searched other than minimum documentation to the extent that such documents are included in the fields searched

Electronic data base consulted during the international search (name of data base and, where practicable, search terms used)
EPO-Internal

C. DOCUMENTS CONSIDERED TO BE RELEVANT

Category*	Citation of document, with indication, where appropriate, of the relevant passages	Relevant to claim No.
X Y	FR 2 738 219 A1 (TARNOT JEAN [FR]) 7 March 1997 (1997-03-07) the whole document -----	1-4, 8-14,22 15-19
X Y	WO 00/05525 A2 (SAIPEM SPA [IT]; GIOVANNINI UMBERTO [IT] ET AL.) 3 February 2000 (2000-02-03) the whole document -----	20,21 15-19
X Y	WO 2011/120627 A2 (HERRENKNECHT VERTICAL GMBH [DE]; BINDER JUERGEN [DE] ET AL.) 6 October 2011 (2011-10-06) the whole document -----	20 15-19
A	US 3 028 186 A (SKUBIC LEROY F) 3 April 1962 (1962-04-03) the whole document -----	1-14
	-/--	

[X] Further documents are listed in the continuation of Box C.

[X] See patent family annex.

* Special categories of cited documents :

"A" document defining the general state of the art which is not considered to be of particular relevance

"E" earlier application or patent but published on or after the international filing date

"L" document which may throw doubts on priority claim(s) or which is cited to establish the publication date of another citation or other special reason (as specified)

"O" document referring to an oral disclosure, use, exhibition or other means

"P" document published prior to the international filing date but later than the priority date claimed

"T" later document published after the international filing date or priority date and not in conflict with the application but cited to understand the principle or theory underlying the invention

"X" document of particular relevance; the claimed invention cannot be considered novel or cannot be considered to involve an inventive step when the document is taken alone

"Y" document of particular relevance; the claimed invention cannot be considered to involve an inventive step when the document is combined with one or more other such documents, such combination being obvious to a person skilled in the art

"&" document member of the same patent family

Date of the actual completion of the international search	Date of mailing of the international search report
21 October 2020	02/11/2020

Name and mailing address of the ISA/	Authorized officer
European Patent Office, P.B. 5818 Patentlaan 2 NL - 2280 HV Rijswijk Tel. (+31-70) 340-2040, Fax: (+31-70) 340-3016	Wojski, Guadalupe

1

Form PCT/ISA/210 (second sheet) (April 2005)

INTERNATIONAL SEARCH REPORT

International application No
PCT/EP2020/071031

C(Continuation). DOCUMENTS CONSIDERED TO BE RELEVANT

Category*	Citation of document, with indication, where appropriate, of the relevant passages	Relevant to claim No.
A	DE 20 2010 002573 U1 (KEURO BESITZ GMBH & CO [DE]) 15 July 2010 (2010-07-15) the whole document	1-14
A	EP 0 657 670 A2 (MCDERMOTT INT INC [US]) 14 June 1995 (1995-06-14)	1-22

1

INTERNATIONAL SEARCH REPORT

Information on patent family members

International application No
PCT/EP2020/071031

Patent document cited in search report	Publication date	Patent family member(s)	Publication date
FR 2738219 A1	07-03-1997	NONE	
WO 0005525 A2	03-02-2000	AT 276128 T	15-10-2004
		AU 755992 B2	02-01-2003
		BR 9912323 A	24-04-2001
		CA 2338050 A1	03-02-2000
		DK 1102698 T3	31-01-2005
		EP 1102698 A2	30-05-2001
		ES 2228081 T3	01-04-2005
		NO 320694 B1	16-01-2006
		NZ 508980 A	26-11-2002
		PT 1102698 E	31-01-2005
		RU 2230967 C2	20-06-2004
		TR 200100165 T2	21-05-2001
		US 6524030 B1	25-02-2003
		US 2003219313 A1	27-11-2003
		WO 0005525 A2	03-02-2000
WO 2011120627 A2	06-10-2011	DE 102010013846 A1	28-06-2012
		EP 2521834 A2	14-11-2012
		PL 2521834 T3	30-06-2014
		WO 2011120627 A2	06-10-2011
US 3028186 A	03-04-1962	NONE	
DE 202010002573 U1	15-07-2010	CN 102161418 A	24-08-2011
		DE 202010002573 U1	15-07-2010
EP 0657670 A2	14-06-1995	AU 674988 B2	16-01-1997
		BG 61407 B1	31-07-1997
		BR 9404157 A	11-07-1995
		CA 2132923 A1	19-05-1995
		CN 1106351 A	09-08-1995
		EP 0657670 A2	14-06-1995
		ES 2137326 T3	16-12-1999
		NO 305143 B1	06-04-1999
		NZ 264167 A	25-06-1996
		PH 30394 A	24-04-1997
		RO 112442 B1	30-09-1997
		RU 2131550 C1	10-06-1999
		SG 49690 A1	15-06-1998
		TR 28349 A	16-05-1996
		TW 301638 B	01-04-1997
		US 5421675 A	06-06-1995
		VN 273 A1	25-09-1996