(No Model.)

B. F. BINNIX.

STEAM VALVE.

No. 456,395. Patented July 21, 1891.

Fig. 1

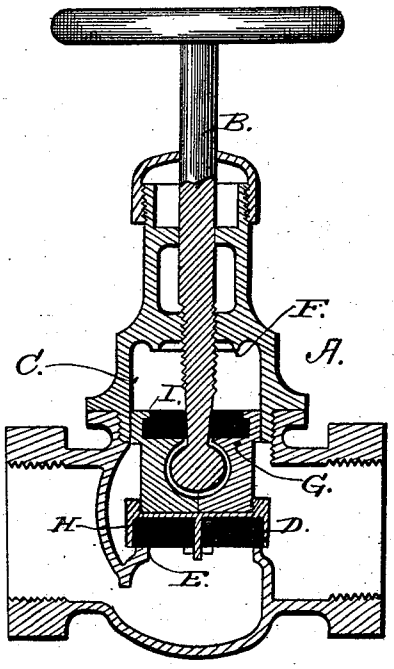

Fig. 2.

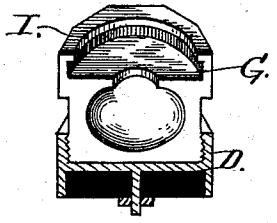

Fig. 3.

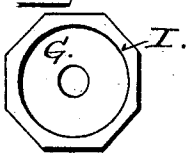

Fig. 4

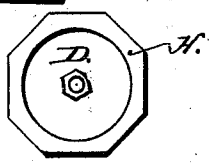

Witnesses:
J. M. Fowler Jr.
Tom R. Stuart.

Inventor
Benjamin F. Binnix
By. Parker & Sweet
Atty.

THE NORRIS PETERS CO., PHOTO-LITHO., WASHINGTON, D. C.

UNITED STATES PATENT OFFICE.

BENJAMIN F. BINNIX, OF SEABROOK, MARYLAND.

STEAM-VALVE.

SPECIFICATION forming part of Letters Patent No. 456,395, dated July 21, 1891.

Application filed January 23, 1891. Serial No. 378,839. (No model.)

To all whom it may concern:

Be it known that I, BENJAMIN F. BINNIX, a citizen of the United States, and a resident of Seabrook, in the county of Prince George's and State of Maryland, have invented new and useful Improvements in Steam-Valves; and I do hereby declare the following to be a full, clear, and exact description of said invention, reference being had to the accompanying drawings, and to the letters of reference marked thereon, which form a part of this specification.

This invention relates to new and useful improvements in steam-valves, the object of the invention being to facilitate the application of a packing ring or disk to the valve-disk, and to so apply the same as to entirely remove the possibility of it being blown out or in any way impaired. The packing, in contemplation of the use of which this invention is made, is that known as the "Jenkins disk;" but the invention equally applies to other descriptions of packing, which when subjected to the action of steam is liable to injury. To instance the nature of this injury, it will be said that in the case of the Jenkins packing-disk and others the packing, while of a firm character, softens somewhat under contact with steam, so as to render it necessary to be so embedded in the valve-disk as to transfer the strain of the steam-pressure to a surrounding rim and not on the packing, which by its very nature is rendered unsuitable for such purpose, and when not properly secured to the valve-disk is liable to be displaced or even blown out.

For the purpose of effecting the above-mentioned objects, I construct the valve-disk with an overhanging flange or annular rim either flush with the surface of the packing-disk or within the disk, the said flange forming a shoulder against which it will be resisted if acted upon by force, which tends to force it outward.

My invention also applies to a construction of valve in which the valve-stem is provided with a double-valve disk or a head having a valve-disk on each end, in which case the respective disks alternately seat themselves in the operation of opening and closing the valve, the outer valve-disk being pressed to its seat in the stem-casing when the preliminary valve is opened, for the purpose of cutting off the steam from the packing in the casing around the stem, which otherwise would be burned out. As regards this construction of valve, the invention consists in forming the outer disk or head in two parts, with the overhanging ring for engaging the packing-ring, and the two sections adapted to be placed together after the packing-ring is applied and attached to the primary valve-disk by means of screw-threads formed on the said sections and the sections being securely bound together by being thus secured.

In the accompanying drawings, Figure 1 is a longitudinal sectional view of a globe-valve with my invention applied thereto. Fig. 2 is a view in perspective of the divided head or disk detached. Figs. 3 and 4 are respectively top and bottom views of the same.

Referring to the illustrations by letter, A indicates an ordinary globe-valve having the valve-stem B operating within the casing C. The opening through the globe portion is closed by the valve-disk D being forced to its seat E, surrounding the said opening, and which is formed in the dividing partition of the valve. A seat F is provided in the valve-stem casing, against which the auxiliary valve-disk G bears when the primary valve is opened, and in consequence cuts off the steam from the upper portion of the casing B and prevents it from burning the packing, which may be replenished by virtue of its auxiliary valve or cut-off when the primary valve is open and in operation.

The valve-disks D and G are provided with the overhanging rims H and I, respectively, which form an annular groove within the disks, in which the packing-ring may be secured.

In order to apply the packing-ring to a disk having an annular groove, it is necessary to have the portion G made in two sections, which when brought together form the complete disk or head. The interior of the disk D, which also may have the overhanging rim, is screw-threaded and adapted to receive the screw-threaded end of the two sections of the disk or head G and bind the same together. By this means both the disks may be provided

with a packing-ring secured within the same in such a manner as to effectually protect it and increase its durability to a great extent.

Having thus described my invention, what I claim, and desire to secure by Letters Patent, is—

In a steam-valve, the combination, with the valve-disk, of a supplemental valve or cut-off disk having an overhanging rim, the said supplemental valve-disk being formed in sections and adapted to be screwed onto the primary valve-disk, substantially as described, and for the purpose specified.

In testimony whereof I affix my signature in presence of two subscribing witnesses.

BENJ. F. BINNIX. [L. S.]

Witnesses:
PARKER H. SWEET, Jr.,
HARRY Y. DAVIS.