E. A. SHERWOOD.

MACHINERY FOR FEEDING AND ATTACHING BUTTONS.

No. 194,005. Patented Aug. 7, 1877.

FIG. 1.

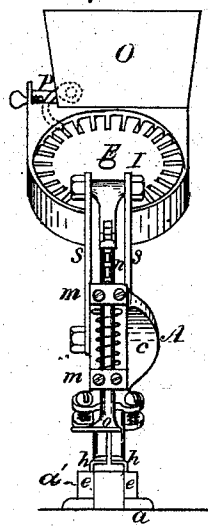

FIG. 2.

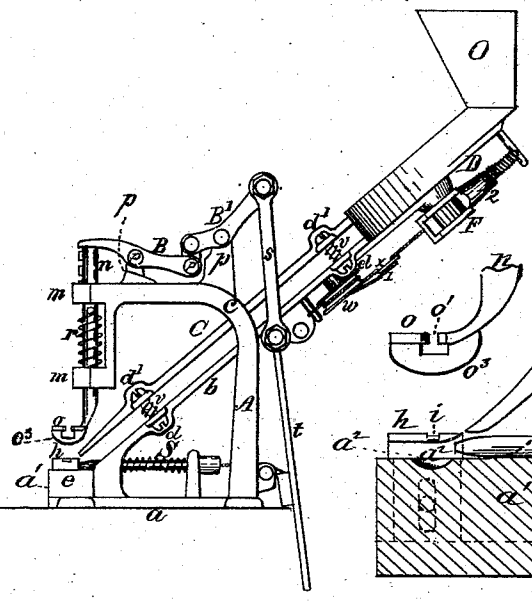

FIG. 6.

FIG. 3.

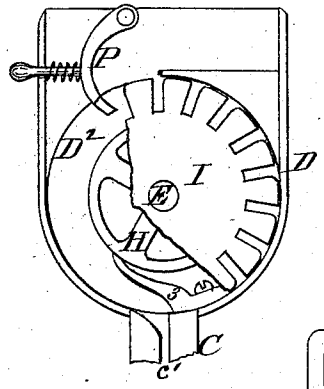

FIG. 4.

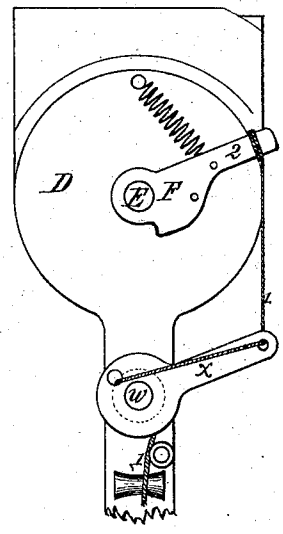

FIG. 5.

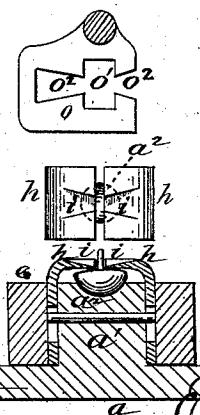

WITNESSES.

C. M. Smith

J. Chas. Meldrum

INVENTOR

Emmett A. Sherwood

N. PETERS, PHOTO-LITHOGRAPHER, WASHINGTON, D. C.

UNITED STATES PATENT OFFICE.

EMMETT A. SHERWOOD, OF SYRACUSE, NEW YORK.

IMPROVEMENT IN MACHINERY FOR FEEDING AND ATTACHING BUTTONS.

Specification forming part of Letters Patent No. **194,005**, dated August 7, 1877; application filed May 14, 1877.

To all whom it may concern:

Be it known that I, EMMETT A. SHERWOOD, of Syracuse, in the county of Onondaga and State of New York, have invented a new and useful Improvement in Shoe-Button Adjusters and Holders, which improvement is fully set forth in the following specification and accompanying drawings, in which—

Figure 1 is a front elevation. Fig. 2 is a side elevation. Fig. 3 is an enlarged front elevation of the adjusting-wheel; Fig. 4, an enlarged back elevation of same, showing ratchet, &c. Fig. 5 is a top plan view and section of the foot and jaws; Fig. 6, a section showing the relative positions of the jaws, the conducting inclines, and the button-placer.

The object of my invention is to furnish a device or apparatus by which shoe-buttons, as well as the shoe itself, can be firmly held while being sewed upon a shoe.

By my apparatus the leather (or cloth) is bent over the eye of the button, and the needle, by one movement of the hand, passes through the leather on both sides of the eye of the button, and through the eye itself.

Among its advantages are: the thread always passes through the same holes in the leather; the thread forms a short loop, by which the button is held, and the leather is not drawn together, or wrinkled, or puckered up by the thread. The buttons are so distributed and adjusted that the button always comes to the proper point and position for being sewed on without being touched by the hands after being placed in the hopper. A slight pressure of the foot distributes, arranges, adjusts, and places the buttons, leaving both hands free to adjust the shoe for each successive button, and handle the needle and thread.

Having given this brief outline of the objects and advantages of my invention, I will first describe its mechanism and construction, and then the manner in which it is operated and the functions of the different parts.

I make the main frame A of the shape shown in the drawings, with a base, *a*, upon which the apparatus stands. As a part of the frame A, or attached thereto, I make an incline, *b*, extending from near the lower front end of the frame upward at about the angle of forty-five degrees to and beyond the upper corner of the main frame. The upper side or surface of this incline is made smooth or flat. At the point where this incline passes the back part of the frame, the main frame is made with a jog or offset, *c*, leaving a slot or opening through which the incline *b* passes, and forming also a support for it, and to which it can be attached when it is not made as a part of the main frame. When made separate it can be fastened to the main frame and in the slot or opening in any ordinary manner. At different points on the edges of this incline lugs *d* are made opposite each other, as shown in the drawings.

The lower front end of the main frame is elevated above the bed or base *a*. This raised portion a^1 is made with perpendicular sides, and the top is made flat and smooth, except that at one point there is a small counter-sink, a^2, in the surface. (See Figs. 5 and 5.) I then take two pieces of metal, *e*, of the desired size, and cut a flat groove about one-half of an inch wide and one-eighth of an inch deep on the inner side of each piece across the face perpendicularly; and about the center of this groove I fix a short pin securely, the outer end of the pin being about flush with the surface of the pieces *e*. (See Fig. 5.)

The jaws *h* are made with the lower part of such size as to fit loosely in the grooves in the pieces *e*. In each of these a perpendicular slot is cut, a little wider than the pins in the grooves. The upper part of these jaws is bent at a right angle to the lower part or upon an arc of a circle, and projects over and a little above the flat surface, and extends over it so that a space is left between them wide enough to receive loosely the eye of a button flatwise. In or upon the upper surface of each, and at the proper point, I cut a groove, *i*, (see Fig. 5,) deeper at the inner than at the outer edge, and with the sides of the groove slightly converging toward each other. These grooves are cut in the jaws *h*, so that when the jaws are placed in position they will come directly opposite each other. They are made rights and lefts. These jaws are then placed in the grooves in the side pieces *e* with the pins in the slots, and the side pieces fastened to the sides of the front part of the main frame by

screws, thereby securing the jaws *h* in proper position, the slots and pins allowing them to play up and down, as desired.

Upon the front upper part of the main frame A I make two ordinary boxes, *m*, one above the other and a little distance apart. In the face-piece of the upper box, and on the inner side, I cut a perpendicular groove of any desired size. Through these boxes passes the foot-holder *n*, having on its upper front side a projection or rib or series of projections, which fit into and slide in the groove in the face-piece of the upper box, preventing the foot-holder from turning.

At the lower end of this holder, either as a part of it or attached thereto, is placed the foot *o*, of the general shape shown in the drawings. This foot is bent out at right angles to the rod *n*. The bottom of this foot *o* is made to conform to the shape of the upper surfaces of the jaws *h*.

In the center of this foot a square hole, o^1, is cut, of the desired size, and from either side slots o^2 o^2 are let into it. (See Fig. 5.) These slots are made with the sides converging, so that the narrowest part is where they enter the square hole.

The slot on the right is cut clear through the side of the foot, while that on the left, though of about the same length, only runs back part way, leaving a lip, o^3, around it. (See Fig. 6.) This lip may be made flat, or bent down more or less, as deemed advisable.

Between the boxes *m* and around the foot-holder *n* I place a strong spring, *r*.

Upon the upper part of the main frame A are placed two studs, *p p*, and upon them I mount the double lever arrangement B B′, connected and arranged in such a manner that the front end of the lever B will act upon the top of the foot-holder *n*. To the back end of the lever B′ I attach, by a loose joint, the yoke *s*, of such length as to extend below the incline *b*, and a little wider. To the lower end of this yoke I attach the pressure-rod *t*, of any desired length.

A little above the bottom of the main frame A, and passing through and supported by a stud rising from the base *a*, and extending through a hole in the lower part of the incline *b*, I place, horizontally, the rod or button-placer S, in the manner shown in the drawings. The head upon the back end prevents it from moving too far forward, and it can be made adjustable, if desired. A hole is also made in the main frame, opposite this head, large enough to admit it loosely, and allowing greater backward movement. To the back end of this head I attach a cord, which, passing through the hole in the main frame, and over a roller, is fastened to the rod *t*.

Above the incline *b*, and parallel with it, I place the upper incline piece C. This piece is made with a groove, *c′*, extending lengthwise the whole length on the under side, Fig. 6. This groove *c′* is made of the proper width and depth to freely and loosely receive the eye of a shoe-button edgewise. This incline piece C is also provided with lugs *d′*, opposite to the lugs *d* on the incline *b*. The two inclines are connected by set-screws *v*, with springs upon them between the lugs, so that the distance between their faces can be adjusted for different sized buttons, and also held apart by the springs. The upper and lower ends of the incline C are scarfed off, as shown in the drawings. At the upper end of this incline piece the inner corner of that part on the left of the groove is cut away or rounded off somewhat, in order to more fully or freely admit the buttons, and, if any of their eyes are turned crosswise, will turn them edgewise, as shown in Fig. 3.

Upon the under side of the incline *b* I make a spur, and upon that I mount, in any ordinary manner, the grooved wheel *w*. Around this wheel 1 pass a cord or belt, 1, one end of which is fastened to the lower axis of the yoke *s* or upper part of the rod *t*. On the under side of the incline *b* I attach, in any ordinary manner, guide-rollers for this cord 1.

A lever-arm, *x*, of any desired length, is attached to the wheel *w*, in any ordinary manner, through a hole in which, at its outer end, the cord 1 also passes after leaving the wheel *w*. (See Fig. 4.) Upon the upper end of the incline *b* I place the button-receiver, distributer, and adjuster, which is constructed as follows: D is the bed-plate, having around the sides and lower part a circular rim. In this rim, at the lower central part, I make an opening wide enough to receive the upper end of the upper incline C. (See Fig. 3.)

The top of the lower incline *b* is made flush with the upper surface of the bed-plate D.

E is a shaft, fitting loosely into a hole through the center of the bed-plate D, and projecting on both sides.

Upon the under side of the bed-plate, and attached to the outer end of the shaft E, the pawl and ratchet device F is securely attached.

To the pawl-holder is attached the lever-arm 2, to which an ordinary spring is fastened for throwing it back into position when operated, and also to draw the pawl back over the ratchet-teeth.

Upon the upper part of the shaft E a thread is cut, above the bed-plate D, and to this I first screw a flat circular disk, D^2, Fig. 3, of metal, fitting loosely inside the rim around the bed-plate, screwing it down, so that it barely touches the bed-plate D.

About this on the shaft E a small wheel, H, with a plain periphery, is placed, screwed on and resting upon the circular disk D^2 for a guide-wheel.

This wheel will vary in size and thickness with the sizes of the buttons, using the thinnest and largest one for the smallest buttons, and the smallest and thickest one for the largest buttons. This wheel also serves to keep the buttons away from the shaft E.

To the right side of the rim, at the opening

therein, I fasten an adjustable dog or guide, 3, which operates to cause the buttons to enter the space between the inclines.

It is made with a long wedge-shaped point extending over to the left, that extremity resting against the outer periphery of the wheel H. It is so attached as to be capable of adjustment for different sized buttons, and to correspond with the different sizes of the wheel H.

Above the wheel H on the shaft E I screw on the adjusting and distributing wheel I, placing it tightly against the wheel H. This wheel I is made to fit loosely within the rim of the bed-plate, of a thickness a little greater than the length of the eyes of the largest shoe-buttons. On radial lines around the outer periphery a series of slots or openings are cut, a little deeper than the width of the heads of the buttons, and the space between the slots is also wider than the heads of the buttons. The slots themselves are made just wide enough to freely admit the eyes of the buttons sidewise.

The outer corners of these slots are also rounded off somewhat on one side, as shown in the drawings, in order to facilitate the entrance of the eyes of the buttons into the slots.

Upon the upper end of the bed-plate D the hopper O is placed, as shown in the drawings. The space between this hopper and the wheel I is closely covered with a flat piece of metal.

At the lower left-hand corner of the hopper I place the stirring device P. The upper arm is fastened loosely upon a rivet, and the lower arm extends forward into the space at the bottom of the hopper.

This stirrer, as its name indicates, is used for stirring up the buttons when they happen to clog in their passage, as will hereinafter more fully appear.

Upon the outside of this stirrer I attach a knob upon a spindle in any ordinary manner, and cut a slot in the side of the hopper, to allow the knob to be worked up and down.

Such is substantially the manner in which I construct my device; and I will now proceed to describe the method of operation and the functions and operation of the different parts thereof.

The whole apparatus is operated by the application of power to a treadle attached to the rod *t*. Any other means of applying power can also be used.

A quantity of buttons are first placed in the hopper O. The power being applied or brought to bear upon the rod *t*, it is drawn down, the cord 1 is tightened, which causes the wheel *w* to revolve, draws down the lever-arm *x*, and tightens the cord extending to the lever-arm 2 attached to the ratchet-and-pawl device F. This pulls down the lever-arm 2, and moves the pawl-and-ratchet wheel forward, and, at the same time, causes the shaft E to revolve slightly, turning the wheel H, and, at the same time, the wheel I, and causing the buttons to drop into the space beneath the wheel I, with their eyes in the slots, at the top of this wheel. Continuing to apply and remove the power upon the rod *t* continues the revolution of the wheel I, presents other slots for the reception of the eyes of the buttons, carries along those buttons already in position in the slots until they reach the point of the guide 3 and the side of the button strikes its inclined or wedging face, then, by the revolution of the wheel I, the eyes of the buttons are forced out of the slots in succession, and the buttons slide down between the inclines *b* and C, with the eyes straight in the groove in the incline C, and the first button reaches, and the top of the button (it being bottom up) rests upon, the point of the placer S, and the buttons, as they in succession slide down, rest sidewise against each other with their eyes in the groove in the incline C.

So much of the operation of the apparatus can be done also by working the pawl-and-ratchet device F by hand.

In case the buttons clog or do not feed well from the hopper into the slots in the wheel I, I stir them up and rectify this by taking hold of the knob on the stirring device P, press upward on it until the spindle reaches the upper part of the slot, let go of it, and the spring throws it back quickly. The point is forced among the buttons, stirs them up, turns them over, and throws them about generally, so that they work better.

The same application of power to the rod *t* tightens the cord extending from it to the head of the placer S, draws back the placer from beneath the first button, which drops down in front of it, and the power being removed the spring on the placer throws it back into place, and at the same time the point forces the first button forward, the body of it passing under the jaws *h*, and the eye passing between them and projecting above them. In this position the top proper of the button lies in the small counter-sink in the front of the main frame, beneath and between the jaws *h*. Then placing the leather in proper position upon the eye of the button, and applying the power to the rod *t*, the yoke *s* is drawn down, pulling down upon the upper end of the lever B′, which operates upon the lever B so as to force the outer end of this lever down upon the upper end of the foot-holder *n*, depressing that and bringing the foot *o* down upon the leather tightly, forcing the leather to bend over the eye of the button, and the eye, covered by the leather, coming up into and projecting slightly above the square hole in the foot *o*. This holds the leather and the button tightly in place. The button is then sewed on. I prefer to use a curved needle.

In sewing the needle passes between the side openings in the foot *o*, (the inclined sides controlling the direction of the needle,) through the leather and the eye of the button from the right to the left, then over the top, and through

again from the right to the left, as often as desired. It is what is commonly called the "over-and-over stitch."

The grooves *i* in the jaws *h* also operate to guide the needle and insure its passage through the eye of the button.

The slots in the foot *o* and the grooves in the jaws *h* also cause the needle to pass through the same holes in the leather every time, so that the leather is not cut up by the needle.

By means of the several springs, when the power is removed from the rod *t* all the parts are thrown back into position for renewed operation and another button is left placed in proper position, and the button sewed on is forced out of the front of the jaws *h*.

Having thus described my invention and its mode of operation, what I claim as my invention, and desire to secure by Letters Patent, is—

1. The combination of the button-placer S, wheel *w*, cord 1, ratchet F, lever-arms *x* and 2, space-wheel H, and the adjusting and distributing wheel I, with the pressure-rod *t*, all constructed and operating together substantially as above described.

2. The combination of the yoke *s*, levers B B′, foot-holder *n*, and foot *o* with the pressure-rod *t*, all constructed and operating together substantially as above described.

3. The combination of the jaws *h*, provided with recesses *i*, with the foot *o*, all constructed and operating together substantially as above described.

4. The combination of the inclines *b* and C with the placer S, jaws *h*, and foot *o*, all constructed and operating together substantially as above described.

5. The combination of the adjusting-wheel I with the hopper O, stirrer P, guide 3, and inclines C and *b*, all constructed and operating together substantially as above described.

6. The combination, with mechanism for feeding and delivering buttons in a machine for uniting them to the uppers of shoes, of recessed or countersunk jaws, with a space between them to receive and hold the button-eye above them, with an open foot adapted to crimp the leather over the button-eye, and allow the leather-covered eye to project through and above said foot to receive the action of the needle in sewing on the button.

7. The divided jaws *h h*, for holding the button to be sewed, made adjustable vertically in relation to the inclined button-conductors to automatically adapt said jaws to different-sized buttons.

8. The mechanism for feeding the buttons in succession, the device for placing and adjusting the buttons, and the foot for holding the button and crimping the leather over the eye, all connected and operated, respectively, by a single movement of an operating foot device, leaving the operator's hands free to adjust the shoe for each successive button, and to handle the needle and thread.

9. The lower incline *b*, with smooth upper surface to support the head of the button, and the upper incline C, with longitudinal groove in its under side to receive and hold the button-eye, adjustable with respect to each other, and combined with the feeding-wheel I, and the button-receiving jaws, substantially as herein set forth.

10. The countersink in the raised bed beneath the jaws *h h*, to receive and hold the head of the button, combined with the narrow opening between said jaws to receive and hold the eye of the button during the operation of uniting it to the leather.

11. The foot *o*, open at one side to allow the needle to pass through the eye of the button while the latter is held clamped between the foot and the jaws, in combination with the recesses *i* in the jaws, to guide the needle, as herein set forth.

12. The combination, with the inclined guides for the buttons and the jaws *h*, of the horizontal button-placer S, for operation as described.

13. The combination, with the button distributing and feeding wheel I, of the way-wheel H and the guide-arm 3, as herein set forth.

14. The revolving disk D^2 and the way-wheel H, forming the button-carrier, the circumferential notches in the wheel I for receiving the eyes of the buttons, combined with the guide-arm 3 and the inclined guide-ways for the buttons, substantially as herein set forth.

15. The guide-arm 3, adjustable, in combination with the rimmed holder D, and interchangeable wheels H, of different sizes, for the purpose stated.

16. The pivoted stirrer P, in combination with the hopper O, and the feeding and distributing wheel I, for the purpose stated.

17. A button adjuster, distributer, and holder, consisting essentially of the adjustable button receiving and holding jaws *h*, the inclined button-conductors *b* C, the adjusting and distributing wheel I, the reciprocating button-placer S, and the vertically-reciprocating crimping and holding foot *o*, all constructed and adapted for operation substantially as herein set forth.

EMMETT A. SHERWOOD.

Witnesses:
J. CHAS. MELDRAM,
C. W. SMITH.