Dec. 8, 1964 C. A. BRYANT ETAL 3,160,125

TUFTING MACHINE WITH NEEDLE SELECTOR

Filed June 10, 1959 3 Sheets-Sheet 1

FIG. 2

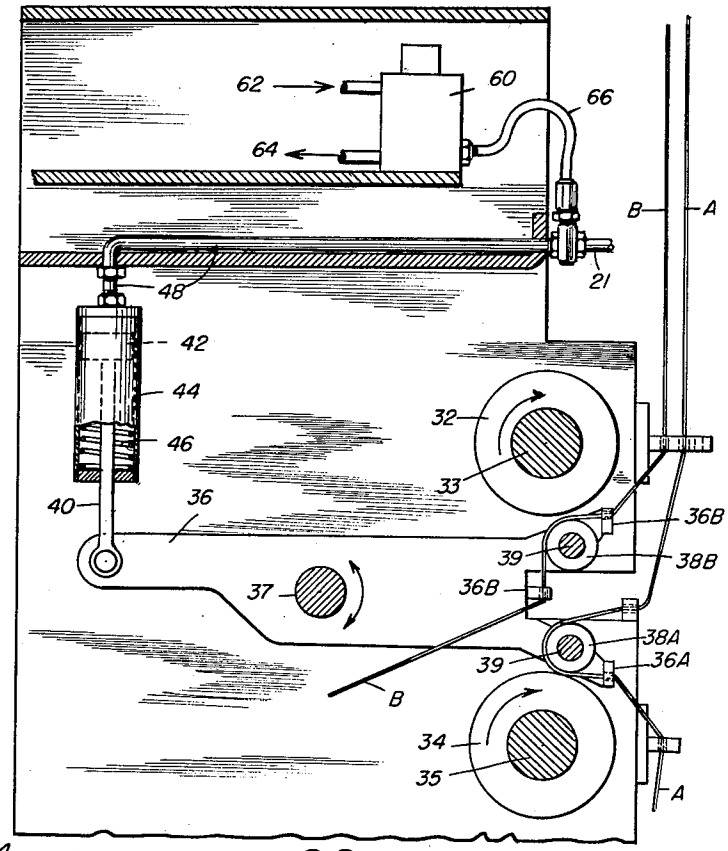

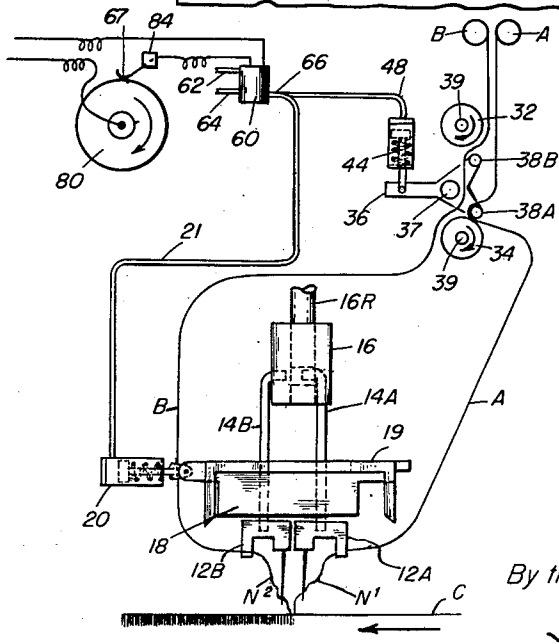

FIG. 1

Inventors
Robert F. Hackney
Otis C. Payne
Clifford Aldine Bryant
By their attorneys
Howson and Howson.

Dec. 8, 1964 C. A. BRYANT ETAL 3,160,125

TUFTING MACHINE WITH NEEDLE SELECTOR

Filed June 10, 1959 3 Sheets-Sheet 2

FIG. 3

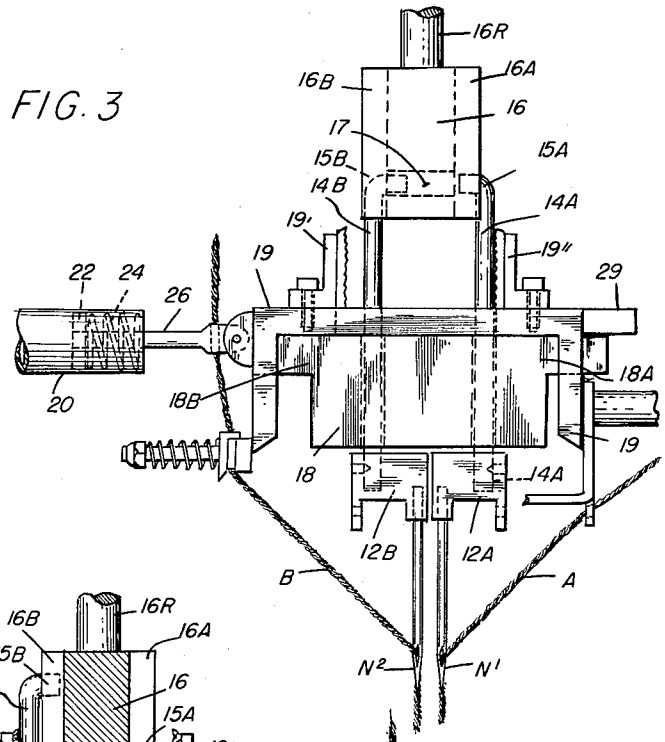

FIG. 4

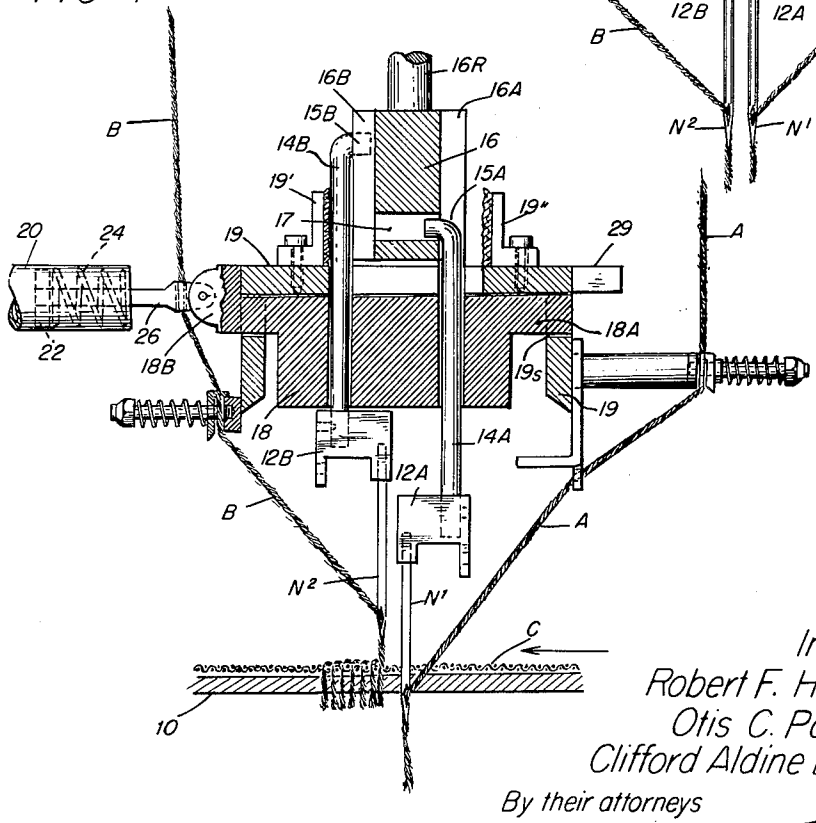

Inventors
Robert F. Hackney
Otis C. Payne
Clifford Aldine Bryant

By their attorneys
Howson and Howson

Dec. 8, 1964 C. A. BRYANT ETAL 3,160,125

TUFTING MACHINE WITH NEEDLE SELECTOR

Filed June 10, 1959 3 Sheets-Sheet 3

FIG. 5

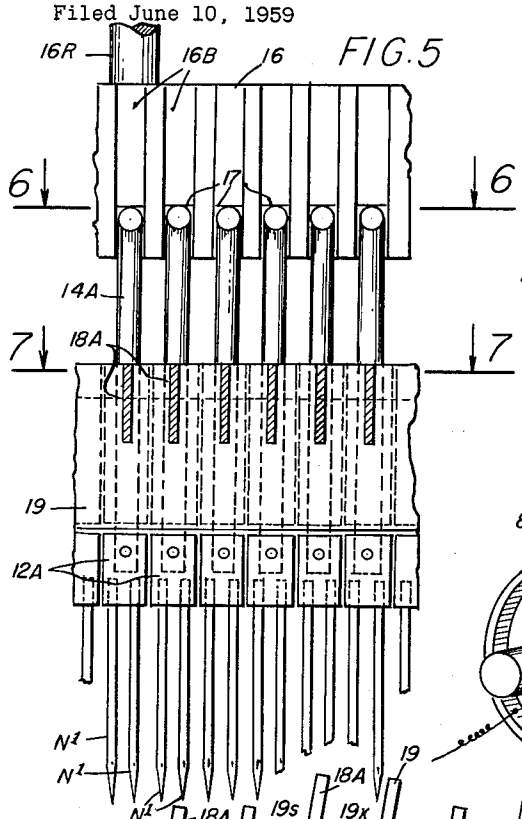

FIG. 6

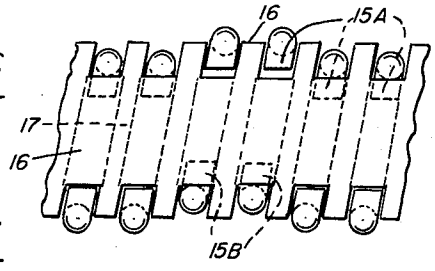

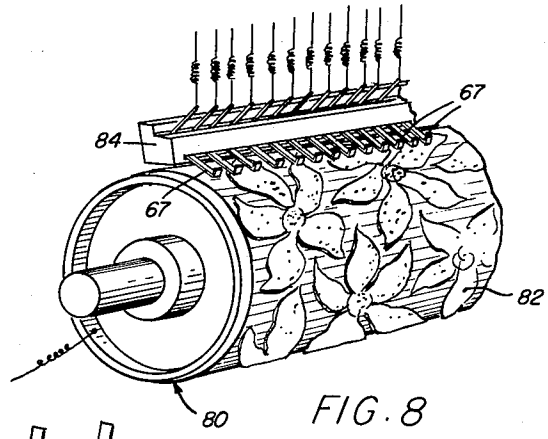

FIG. 8

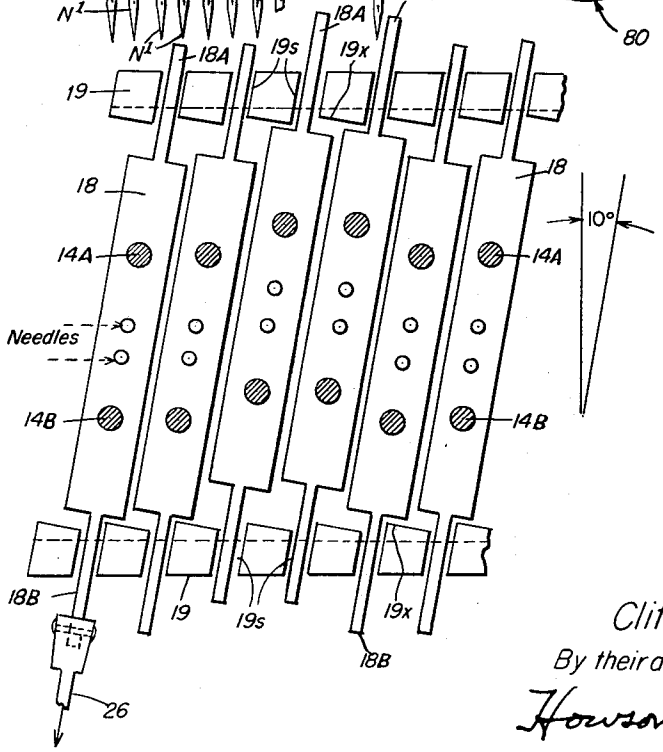

FIG. 7

Inventors
Robert F. Hackney
Otis C. Payne
Clifford Aldine Bryant

By their attorneys

Howson and Howson.

United States Patent Office 3,160,125 Patented Dec. 8, 1964

3,160,125

TUFTING MACHINE WITH NEEDLE SELECTOR

Clifford Aldine Bryant, Robert F. Hackney, and Otis C. Payne, Dalton, Ga., assignors to Cabin Crafts, Inc., Dalton, Ga., a corporation of Georgia

Filed June 10, 1959, Ser. No. 819,416
16 Claims. (Cl. 112—79)

This invention relates to tufting machines. More particularly, it relates to a tufting machine in which multiple colors or characters of stitches or tufts may be created in one longitudinal row of stitching as the tufting proceeds. The invention is also concerned with ability to vary the color or character of the yarn in individual stitches or tufts across the fabric in a given transverse row so that the color or character may be different not only in a longitudinal row, but may differ also from that of a neighboring stitch or in transverse rows. By the means provided according to the present invention it is possible to achieve a multitude of variations in effects in color and texture in the designs.

According to the present invention, at least two yarns of different character or color, or both, are fed to two needles which are adapted to form tufts in alternation or selectively in a single longitudinal row of stitches. The selection of one needle or another for the formation of any individual stitch or group, or succession of stitches, is controlled by pattern control means and this pattern control means simultaneously controls the feed of yarn so that only the needle which is to form the stitch has yarn fed to it.

Heretofore proposals have been made for forming stitches of different character of yarn, or different color of yarn, in a single longitudinal row, but such proposals have involved machines which were difficult or impractical to operate on a commercial scale or required slowing down or stopping of the machine whenever change in the character of the stitch was to be made. Obviously in such prior machines if every other stitch was to be of a different color or character, it would be necessary to either slow down or stop the machine for every other stitch. This would be impossible commercially since operations of this type require running machines continuously at high speeds in order to produce fabrics economically. Moreover, in prior machines whenever change in character of a stitch was to be made, the whole bank of needles had to operate simultaneously producing the same change in character of stitch entirely across the fabric.

It is an object of the present invention to overcome the difficulties of the prior machines by providing a machine which will operate at commercially acceptable speeds and will permit the change in character or color of the tufts or stitching without stopping the machine or reducing its speed.

Another object is to provide an improved machine of the character described in which the control is accomplished by pattern means individually for each needle.

Another object is to provide an arrangement of the needles which are to stitch selectively in the formation of a longitudinal row so as to avoid any tendency of one needle to stitch down a previous stitch or interfer with a previously formed stitch during the formation of the succeeding stitch.

Another object is to provide simultaneous control by the pattern means of the selection of the needle which is to form the stitch and of the yarn fed to that needle so as to feed only to the needle which is operating.

Other objects and advantages of the invention will become apparent as it is described in connection with the accompanying drawings.

In the drawings:

FIG. 1 is a diagrammatic view of the pattern control and the feeding and tufting instrumentalities of the invention showing their relation and arrangement.

FIG. 2 is a side elevation view, partly in section, of the yarn feed control means.

FIG. 3 is a side elevation view, partly broken away, showing the needles and their operating mechanism when the needles are elevated.

FIG. 4 is a side view similar to FIG. 3, but partly in section, with a needle penetrating the cloth.

FIG. 5 is a front elevation view, partly broken away, of a portion of the needle bank and operating mechanism of FIGS. 3 and 4 with certain parts eliminated for clarity.

FIG. 6 is a transverse section view taken along line 6—6 of FIG. 5.

FIG. 7 is a transverse section view taken along lines 7—7 of FIG. 5.

FIG. 8 is a perspective view, partly broken away, of the pattern control drive and associated electric switching elements.

Needle Selection and Operating Devices

Referring to the drawings and particularly to FIGS. 3 and 4, the usual cloth or backing sheet C passes over the work-support bedplate 10 and is fed in the direction of the arrow in FIG. 4. For each row of stitching or tufting to be formed, there are two needles N′ and N² in the form illustrated, spaced from one another in the direction of cloth movement. There is a bank of such needles extending across the full length of the machine and there may be as many needles as desired in the bank. Each of the needles N′ and N² is supported in a needle holding bracket 12A or 12B, respectively, which in turn are carried by vertically reciprocating needle shafts 14A and 14B. Either one or the other of these needle shafts 14A and 14B is reciprocated by a horizontal thrust bar 16 which extends across the full length of the machine and is actuated by a pair or more thrust rods 16R as may be needed to support and guide the movement of the needle thrust bar 16. Conventional means may be used for actuating the thrust rods and thrust bar.

In the vertical side faces of the thrust bar 16, there are cut a plurality of parallel vertical grooves 16A and 16B on opposite sides of the bar, there being one groove for each needle schaft. Connecting each pair of opposite grooves is a horizontal passage 17 near the bottom of the thrust bar 16. This passage is designed to receive elbows 15A, 15B formed on the upper ends of the needle shafts and inwardly directed toward the thrust bar.

The thrust bar and thrust rods are fixedly located in the machine frame so as to reciprocate in a fixed vertical plane, but the needle shafts are laterally movable relative to the thrust bar. For that purpose, the needle shafts are slidably mounted for vertical reciprocation in a horizontally movable slide or needle shaft shifter 18 movable to and fro in the direction of cloth movement. There is one needle shaft shifter provided for each pair of needle shafts 14A and 14B and it is preferably T-shaped in cross section, the opposite ends 18A and 18B of the head of the shifter extending through transverse passages or slots 19S in a channel-shaped supporting member 19 which is part of the machine frame.

For causing the lateral shifting of each needle bar shifter 18, each shifter is provided with a pneumatic cylinder 20 in which a piston 22 is operated by air pressure against the bias of a coil compression spring 24 within the cylinder. The spring presses against the piston to bias the piston towards one end of the cylinder. A piston rod 26 is positively connected to the end 18B of the shifter 18 so that the shifter is normally biased by the spring 24 into one position (toward the left in FIGS. 3 and 4). When in the normally biased position, the shifter will move the needle shafts 14A and 14B into

the position of FIG. 4 in which the elbow 15A will be urged into the passage 17 and the elbow 15B will be urged outwardly of that passage. Thus, as the thrust bar reciprocates the needle shaft 14A will be carried up and down with it while the needle shaft 14B will not be actuated since its elbow 15B lies within the channel or groove 16B.

In order to hold the bar 14B in its uppermost position during its inactivity, a right angle bracket 19' is provided with one arm extending vertically adjacent the needle bar 14B. The upstanding arm may be faced with leather or other suitable material to act as a brake shoe upon the movement of the needle bar 14B during its inactivity. A similar brake shoe bracket 19'' and brake shoe are provided on the other side on the channel shaped supporting member 19 to hold the needle bar 14A when it is inactive.

In order to stop the shifters in fixed and certain opposite positions (compare FIGS. 3 and 4; also, the upper and lower positions of FIG. 7), it is preferred to have shoulders on the shifters abut veritcal surfaces 19X at the ends of the slots 19S.

From the foregoing, it will be observed that when air pressure enters the cylinder 20, the piston will be pushed from the position shown in FIG. 4 to the position shown in FIG. 3, carrying the needle shafts along during such lateral shifting. According to the invention, the shifting of the needle-carrying slide is arranged to occur only when the horizontal thrust bar 16 reaches the top of its stroke as shown in FIG. 3. When in that position, the elbows of both of the needle shafts will be in alignment with the passage 17 and the shifter can thus move freely to cause engagement of one elbow in the passage 17 and retraction of the other elbow therefrom simultaneously. Likewise, when the shift is to be in the opposite direcetion, the air pressure is released from the cylinder 20 in exact coordination and timing with the location of the thrust bar 16 at the top of its stroke. Should the air pressure entering the cylinder 20 build up and cause the slide 18 to start to shift before the needle thrust bar 16 reaches the top of its stroke, the bent end of the needle shaft will slide along the bed of its groove until the top of the stroke is reached. At that moment—and only then at the top of the stroke—can the disengagement of one needle and the engagement of the other occur.

In order that upon shifting of the needles from one position to another the rear needles shall not cause yarn of the front needle to be sewed down by the next formed stitch of the rear needle after the shifting, it is preferred that the shifter be located in slots, each at an angle of approximately 10° from the direction of travel of the cloth through the machine so that the shifting will be at a like angle.

Although without this angulation the front needles would not sew down the yarn from the rear needles, the rear needles would sew down the remaining tail of yarn from the last stitch of the front needle before the front needle stitch is released from the looper. This occurs because in making cut pile, several loops (usually at least two) always remain on the looper. In point of time, the cutting is several sititches late; or, in point of distance, the looping is several stitches behind the cutting so that shifting the rear needle forward directly in line with the stitching would allow sewing down a previously formed stitch of the front needle.

In the event that it should be desired to form two or three rows of tufts simultaneously, each needle N' or N^2 may be duplicated or triplicated. Each pair or triplicate will be mounted in the needle holding brackets 12A and 12B, respectively, as a unitary group.

Yarn Feed Control

It is desirable that the yarn shall not be fed to the needle which is inactive. Therefore, the yarn feed is coordinated with the selection of the needles and action of the shifter 18 so that when the needle N' is operating, the yarn A which it carries will be fed only to that needle and the feed of the yarn B carried by the needle N^2 will be stopped. In order to accomplish this, yarn feeding means as illustrated in FIG. 2 is provided.

Journalled in parallel end plates or castings of the machine frame are two vertically aligned rubber covered yarn feed rolls 32, 34, preferably of equal diameter, mounted on shafts 33 and 35 which are driven in any suitable manner by conventional driving means not shown. The rolls 32 and 34 rotate at the same peripheral speed and extend the length of the machine.

For guiding each pair or group of yarn ends A and B, there are provided a series of parallel horizontal beams 36 pivotally mounted in their midportions on a horizontal shaft 37 runing lengthwise of the machine and carried in the end plates of the frame. One end of each beam is bifurcated and has mounted upon its arms a pair of vertically spaced guide wheels 38A and 38B on parallel horizontal axes 39 laterally extending from the arm or bifurcations of the beam 36. Yarn guide loops 36A are provided at convenient points on the beam 36 to guide the yarn A and other yarn guide loops 36B are provided to guide the yarn B.

When the beam 36 is tilted to lower its right end, as viewed in FIG. 2, the guide wheel 38A will press against the lower yarn feed roll 34 and will press the yarn A also against that yarn feed roll causing the yarn A to be fed to the needle N'. Likewise, when the beam 36 has its right end tilted upwardly, the guide roll 38B will press against the yarn feed roll 32, causing the yarn B to be fed.

Tilting of the beam 36 is accomplished by a pneumatic cylinder; and control of its operation is by a solenoid valve which is energized and deenergized by electric circuits which are closed and opened by contact fingers wiping over the pattern drum. For this purpose, one end of a piston rod 40 is pivotally connected by a pivot pin to the beam 36. The other end of the piston rod is connected with piston 42 in a cylinder 44 which is biased by a coil compression spring 46 within the cylinder in a direction to oppose air pressure and to urge the yarn guide wheel 38A against the yarn feed roll 34.

Coordination of Yarn Feed Control and Needle Selection

The bias of the spring 46 in the yarn-feed-control cylinder 44 is in the same direction as the spring 24 within the needle-shifter-control cylinder 20 (FIGS. 3 and 4) so that when no air pressure is admitted to either of these cylinders the needle N' will be operative and the yarn A will be fed to that needle.

On admission of air pressure to the cylinder 44, the beam 36 is tilted and the feed of yarn A is stopped and at the same time the feed of yarn B is started.

By coordinating the admission of air pressure into the needle-shifter control cylinder 20 with the admission of air pressure into the yarn-feed-control cylinder 44, the needle N^2 may be made operative and the feed of yarn B will be started to that needle while the needle N' and yarn A remain stationary.

Control of air to the yarn-feed-control cylinder 44 and the needle-shifter-control cylinder 20 is by a solenoid valve 60 of conventional construction having air inlets and exhaust connections 62 and 64, respectively, and a common connection 66 to the branch air feed line 48 for the yarn-feed-control cylinder 44 and branch feed connection 21 to the needle-shifter control cylinder 20.

Pattern Control of Yarn Ends Individually

Each beam 36 and its yarn-guide wheel, together with the yarn-feed-control cylinder 44, the needle-shifter 18 control cylinder 20 and the solenoid control valve 60, may be considered as a unit. Operation of the solenoid valve of the unit will thus control simultaneously the selection of

the yarn feed and of the needle which is to be reciprocated. Since there is similar control equipment for each set of needles N' and N², each line or row of longitudinal stitching may be individually controlled to select either the yarn A or the yarn B at any desired point; and that yarn may be continued or changed for any number of stitches or successive reciprocations of the needle, thus enabling a change in the character of the yarn—either in color or in texture, or both—if the yarns A and B are different not only in color, but also in texture.

For the purpose of providing selection of the individual needles which are to be operative or inoperative in exact conformance with a pattern, the arrangement of FIG. 1 and pattern control means of FIG. 8 are provided. The solenoid of each valve 60 is connected in series to a source of electric power, not shown, and to a switch finger 67, there being a switch finger for each solenoid. The switch fingers may be of flexible sheet metal strips which are good electric conductors. The fingers for the series of solenoids which control the series of yarns and pistons and, in turn, the beam and yarn feed and needle shifting are arranged in and are mounted on an insulated supporting bar 84 adjacent a pattern drum 80 so as to engage and wipe over the surface thereof. The drum is of conductive material and connected in the power circuit. A pattern 82 of non-conducting sheet material is adhered to the surface of the drum so that the circuit is broken when the pattern comes under a finger. Thus, the solenoid and cylinders controlled by that finger are deactivated and the springs within the air cylinders move the yarn control beams and the needle shifters to engage the yarn guide wheels with the yarn feed rolls and to move the shifter to render the needle N' operative.

When the switch finger again comes in contact with the surface of the drum at a conductive area after a non-conductive portion of the pattern has passed from under the switch finger, the circuit will again be completed to energize the solenoid valve and admit air to the pneumatic cylinders causing the yarn B to be fed and the needle N² to become operative.

Obviously the pattern 82 may be either conductive or non-conductive as may be preferred by the user. For example, in some instances where the background predominates, it may be desired that the solenoid and the cylinders be deenergized for the majority of the tufting operation so that power may be saved. When operating a machine constructed as described, the bank of needles descends and penetrates the cloth C. Conventionally, the yarn loop which each needle carries down through the cloth is cut and held on a looper (not shown) as the needle ascends, forming a tuft of predetermined height. The tuft may be cut by conventional cutting means associated with the looper as is well known in the art.

Many modifications within the scope of the invention will occur to those skilled in the art. Therefore, the invention is not limited to the exact form and arrangement of parts as illustrated and described in the embodiment disclosed.

What is claimed is:

1. A tufting machine comprising a pluraliy of yarn-carrying needles adapted to penetrate a cloth moving in a certain direction to form yarn loops, said needles being spaced from one another in the direction of cloth movement, means for reciprocating said needles to penetrate the cloth, guideways slidably supporting said needles for said reciprocatory movement, connecting means movable to and fro in the direction of cloth movement for connecting a needle to said reciprocating means and to select which of said needles shall be reciprocated thereby, separate yarn-feeding means for each needle independent of needle-reciprocating to feed predetermined lengths of yarn for each reciprocation of the needle, and means to cause operation and to interrupt operation of the yarn-feed to each needle in timed relation to the choice and rejection respectively of each needle for reciprocation.

2. A tufting machine comprising a plurality of yarn-carrying needles adapted to penetrate a cloth moving in a certain direction to form yarn loops, said needles being spaced from one another in the direction of cloth movement, means for reciprocating said needles to penetrate the cloth, guideways slidably supporting said needles for said reciprocatory movement, connecting means movable to and fro in the direction of cloth movement for connecting a needle to said reciprocating means and to select which of said needles shall be reciprocated thereby, separate yarn-feeding means for each needle independent of needle-reciprocation to feed predetermined lengths of yarn for each reciprocation of the needle, and means to cause operation and to interrupt operation of the yarn-feed to each needle simultaneously and also simultaneously with the to or fro movement of said connecting means.

3. A tufting machine as claimed in claim 2 having means to cause the to and fro movement of said connecting means to occur automatically and only at the uppermost position of said needle-reciprocating means.

4. A tufting machine comprising a plurality of yarn-carrying needles adapted to penetrate a cloth moving in a certain direction to form yarn loops, said needles being spaced from one another in the direction of cloth movement, means for reciprocating said needles to penetrate the cloth, guideways slidably supporting said needles for said reciprocatory movement, connecting means movable to and fro in the direction of cloth movement for connecting a needle to said reciprocating means and to select which of said needles shall be reciprocated thereby, separate yarn-feeding means for each needle independent of needle-reciprocation to feed predetermined lengths of yarn for each reciprocation of the needle, and pattern-controlled means controlling the operation of said needle selecting means while the machine is running and also causing operation and interrupting operation of the yarn feed to each needle in timed relation to the choice and rejection respectively of each needle for reciprocation.

5. A tufting machine comprising a plurality of yarn-carrying needles adapted to penetrate a cloth moving in a certain direction to form yarn loops, said needles being spaced from one another in the direction of cloth movement, means for reciprocating said needles to penetrate the cloth, guideways slidably supporting said needles for said reciprocatory movement, connecting means movable to and fro in the direction of cloth movement for connecting a needle to said reciprocating means and to select which of said needles shall be reciprocated thereby, separate yarn-feeding means for each needle independent of needle-reciprocation to feed predetermined lengths of yarn for each reciprocation of the needle, and pattern-controlled means controlling the operation of said needle selecting means while the machine is running and also causing operation and interrupting operation of the yarn feed to each needle simultaneously and also simultaneously with the to or fro movement of said connecting means.

6. A tufting machine as claimed in claim 4 in which the yarn-feeding means includes individual yarn guide means for each yarn end which are shiftable to selectively feed only to the needles which are to reciprocate.

7. A tufting machine as claimed in claim 4 in which the yarn-feeding means includes individual yarn guide means for each yarn end, a shiftable member on which a pair of said guide means are mounted for simultaneous movement to select the feed for only the needles which are to reciprocate.

8. A tufting machine as claimed in claim 4 in which the yarn-feeding means includes a shiftable member, individual yarn guide means mounted on the shiftable member for different yarn ends for different needles, the shifting of said member alternating the feed of yarn by the guide means thereon.

9. A tufting machine comprising a plurality of yarn-carrying needles adapted to penetrate a cloth moving in a certain direction to form yarn loops, said needles being

spaced from one another in the direction of cloth movement, means for reciprocating said needles to penetrate the cloth, guideways slidably supporting said needles for said reciprocatory movement, connecting means movable to and fro in the direction of cloth movement for connecting a needle to said reciprocating means and to select which of said needles shall be reciprocated thereby, and means to automatically move said connecting means to and fro only at the uppermost position of the needle reciprocating means while the machine is running, to create a design.

10. A tufting machine as claimed in claim 9 having means to cause the to-and-fro movement of the needle-guideways to be at an angle of approximately 10° to the line of travel of the cloth to avoid sewing down of a part of the preceding stitch.

11. A tufting machine comprising a plurality of yarn-carrying needles adapted to penetrate a cloth moving in a certain direction to form yarn loops, said needles being spaced from one another in the direction of cloth movement, means for reciprocating said needles to penetrate the cloth, guideways slidably supporting said needles for said reciprocatory movement, connecting means movable to and fro in the direction of cloth movement for connecting a needle to said reciprocating means and to select which of said needles shall be reciprocated thereby, and means to automatically move said connecting means to and fro only at the uppermost position of the needle reciprocating means while the machine is running to create a design, separate yarn-feeding means for each needle independent of needle-reciprocation to feed predetermined lengths of yarn for each reciprocation of the needle, and means to cause operation and to interrupt operation of the yarn-feed to each needle in time relation to the choice and rejection respectively of each needle for reciprocation.

12. A tufting machine as claimed in claim 11 having means to cause the to-and-fro movement of the needle-selecting means to be at the angle of approximately 10° to the line of travel of the cloth to avoid sewing down of a part of the preceding stitch.

13. A tufting machine as claimed in claim 4 and means to cause said to-and-fro movement of the needle-selecting means to occur only at the uppermost position of the needle-reciprocating means.

14. A tufting machine as claimed in claim 13 having means to cause the to-and-fro movement of the needle-selecting means to be at an angle of approximately 10° to the line of travel of the cloth to avoid sewing down of a part of the preceding stitch.

15. In a tufting machine as claimed in claim 1 for making tufted fabric, wherein said spaced needles are in two banks, said machine having selecting means including a pattern on a moving surface having the design desired to appear in the tufted fabric, and electrical means responsive to design variations in the pattern on said moving surface to operate said yarn feed and cause said needle selection whereby to cause the design to appear in the tufted fabric.

16. In a tufting machine as claimed in claim 2 for making tufted fabric, wherein said spaced needles are in two banks, said machine having selecting means including a pattern on a moving surface having the design desired to appear in the tufted fabric, and electrical means responsive to design variations in the pattern on said moving surface to operate said yarn feed and cause said needle selection whereby to cause the design to appear in the tufted fabric.

References Cited in the file of this patent

UNITED STATES PATENTS

438,427	Rehfuss	Oct. 14, 1890
521,982	Judson	June 26, 1894
528,782	Laskey	Nov. 6, 1894
876,562	Kleutgen	Jan. 14, 1908
1,984,330	Boyce	Dec. 11, 1934
1,984,331	Boyce	Dec. 11, 1934
2,176,957	Covell	Oct. 24, 1939
2,649,065	Casper	Aug. 18, 1953
2,782,741	Smith	Feb. 26, 1957
2,832,301	Wear	Apr. 29, 1958
2,868,152	Benink et al.	Jan. 13, 1959
2,880,684	Masland	Apr. 7, 1959
2,954,865	Hackney et al.	Oct. 4, 1960
3,056,364	Dedmon	Oct. 2, 1962
3,075,481	Stratton	Jan. 29, 1963