July 8, 1958 F. E. STEPHANY 2,842,125

SYRINGE TIP STRUCTURE

Filed Jan. 20, 1954

Fig. 1

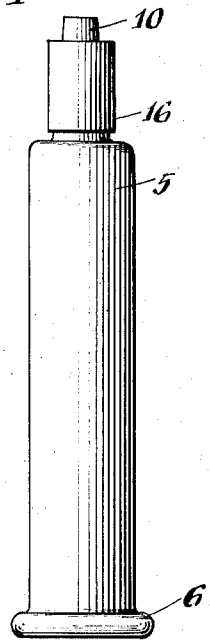

Fig. 2

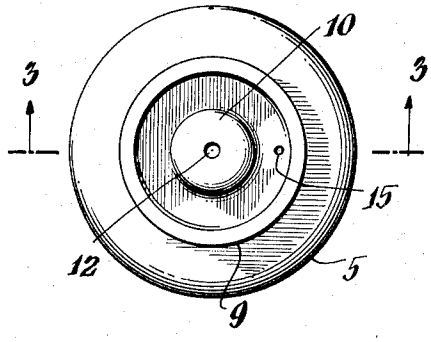

Fig. 3

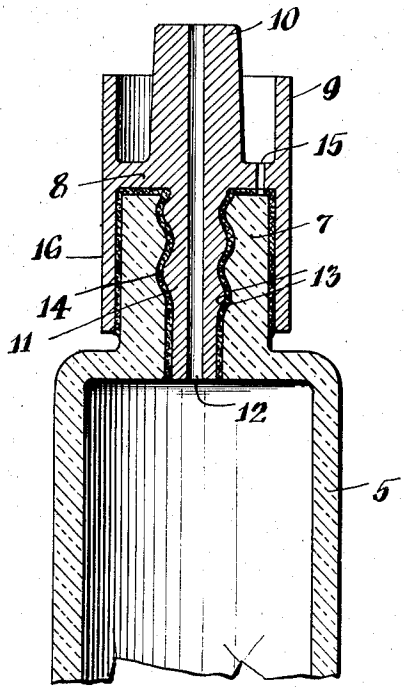

Fig. 4

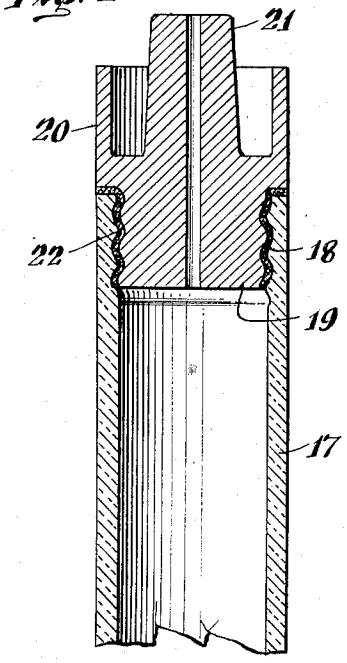

INVENTOR

Fred E. Stephany

BY

Kane, Dalsimer and Kane

ATTORNEYS

United States Patent Office

2,842,125

Patented July 8, 1958

2,842,125

SYRINGE TIP STRUCTURE

Fred E. Stephany, Rutherford, N. J., assignor to Becton, Dickinson and Company, Rutherford, N. J., a corporation of New Jersey

Application January 20, 1954, Serial No. 405,085

4 Claims. (Cl. 128—218)

This invention relates to a syringe tip structure of novel design by means of which a needle may be operatively coupled to the barrel or body of the syringe for the purpose of providing an assembly for use in hypodermic injections.

It is an object of the invention to furnish a structure which may readily be produced by automatic machines and easily practised methods which structure may likewise be easily associated with the tip of a glass syringe barrel; the parts thereupon remaining in permanent connection throughout the life of the syringe.

Also, by means of the present invention, syringe breakage will be reduced to a minimum and a structure is provided which, in accordance with the requirements of the profession, may readily be cleaned and sterilized.

With these and other objects in mind, reference is had to the attached sheet of drawings illustrating practical embodiments of the invention and in which:

Fig. 1 is a side elevation of a syringe barrel;

Fig. 2 is a top plan view of the unit as illustrated in Fig. 1;

Fig. 3 is a fragmentary sectional side view taken along the line 3—3 in the direction of the arrows as indicated in Fig. 2; and

Fig. 4 is a view similar to Fig. 3 but showing an alternative form of structure.

Referring primarily to Figs. 1, 2 and 3, the numeral 5 indicates the body of a syringe barrel preferably formed of glass and having a rear or inner open end through which the piston (not shown) is introduced into its bore. This end may be defined by a flange 6 of any preferred configuration. The opposite end of the barrel is provided with a bored wall from which a preferably integral tip portion 7 extends outwardly. As is well understood, this tip portion serves as a base or mounting for a unit by means of which a hypodermic needle (not shown) may be coupled with the barrel. The detailed structure of this coupling has not been herein shown or described. Suffice it to say that it may embody any standard and acceptable design.

The coupling, however, includes a body 8 extending transversely with respect to the axis of the assembly. A collar or flange portion 9 projects outwardly from the periphery of body 8. Extending in a similar direction in line with the axis is a projecting portion 10, which in accordance with conventional practice, may be tapered. A rearwardly projecting part 11 is also provided integrally with body 8 and a bore 12 extends lengthwise of the assembly from the outer end of projecting portion 10 through to the similar end of projection 11. All of these several parts are preferably formed of a suitable metal.

Both the outer surface of projection 11 and the bore of tip 7 are formed with cooperating threads. These threads—indicated at 13—should be of relatively steep pitch and present rounded apices and trough portions. As shown, the threads terminate at points beyond the

inner end of both the tip bore and the projection. The external diameter of projection 11 should be slightly less than that of the bore embodied in tip 7. Likewise, the internal diameter defined by collar 16, which is concentrically disposed with respect to this projection, should be slightly greater than the outer diameter of tip 7. The adjacent surfaces are connected by a cementing layer 14 and if necessary, a venting opening 15 extends through the base or body 8. In many instances, such an opening will not be necessary in that the substance providing layer 14 will not pocket or become entrapped between the surfaces in a manner such that a proper disposition of the parts with respect to each other is prevented. As shown especially in Fig. 3, the length of collar 16 should be sufficiently reduced so that it will clear the adjacent outer face of the end wall of barrel 5 when the unit is properly mounted. So mounted, projection 11 should have its inner end terminating substantially in the plane of the inner face of such end wall.

In any event, with the parts constructed in the manner just described, it will be apparent that certain or all of the bore and exterior surfaces of tip 7 may be coated with cement. This may also be true of the inner faces of collar 16 and the adjacent surface of body 8 as well as the outer surface of projection 11. In any event, with a coating applied in any desired and proper manner, the body of unit 8 will be applied to the tip by inserting projection 11 within the bore of the latter and relatively rotating the parts so that cooperating threads 13 serve to effect a telescoping of the coupling and tip to the position generally shown in Fig. 3. As this action occurs, if it is necessary to vent the cementitious layer or body 14, this may be done through an opening such as 15 if adequate venting does not occur by a spreading of the cement as the parts are tightened and a final ejection of surplus cement material beyond the edge of collar 16. Regardless of this, however, it will be apparent that after setting of the cement, an assembly will be presented in which the needle-mounting unit is, in effect, an integral and fixed part of the syringe barrel. No cavities will be present such that difficulties will be experienced in cleaning and sterilizing the parts. Any surplus cement material extending beyond the surfaces of the needle-mounting unit should, of course, be removed before that material hardens.

If a structure different in certain details from that illustrated in Fig. 3 were desired, then the teachings embodied in Fig. 4 could be followed. In that view, the numeral 17 indicates a syringe barrel which in this instance is not formed with an integral end wall. Rather, adjacent its outer end, the barrel bore is formed with threads 18 preferably corresponding to threads 13 as heretofore described. A correspondingly threaded plug 19, which may be of metal, engages threads 18 and serves to draw body 20 into firm engagement with the outer edge of barrel 17. That body will conveniently include a collar or flange portion corresponding to part 9 as well as an outward projection or tip 21 corresponding to part 10. A layer 22 of cement or similar material will intervene the surfaces of adjacent threaded portions 18 and 19 as well as body 20 and the outer edge of barrel 17. Thus, a firm sealing and retention of the parts is assured. Likewise, a thorough cleaning and sterilization of those parts becomes possible.

In both forms illustrated, an effective seal results from the use of the cement layer. This seal will be maintained despite any difference of the coefficient of expansion between the glass and metal parts due to the cushioning effect of the sealing layer.

Thus, among others, the several objects of the invention as specifically aforenoted are achieved. Obviously, numerous changes in construction and re-arrangements

of the parts might be resorted to without departing from the spirit of the invention as defined by the claims.

I claim:

1. In a hypodermic syringe in combination a barrel unit having an outer end formed with a bore, a needle-mounting member having a body overlying the outer barrel edge defining such bore, an extension forming a part of said body and projecting into such bore, the bore of said barrel being formed with threads extending through to its outer end, said extension being also formed with threads, the diameter of said extension being substantially less than the diameter of said bore whereby an effective area of clearance exists between the threads of said extension and bore and a cement-like layer lying within said area to intervene said threads and also extending into space existing between the body of such member and said outer barrel edge.

2. In a hypodermic syringe as defined in claim 1, the threads of the barrel terminating at a point short of the opposite end of its bore and the threads of said extension also terminating at a point short of its outer end.

3. In a hypodermic syringe as defined in claim 1, the bore of the barrel unit providing a surface for direct engagement with the piston of the syringe.

4. In a hypodermic syringe in combination a syringe barrel end wall, a bored tip extending therefrom, a needle-mounting unit including a rearward extension and a collar concentrically disposed with respect to and spaced from said extension, said collar encircling said tip, said extension projecting into the bore of said tip and terminating in line with the inner end of the latter and said unit being formed with an opening through which cement material may be vented as said unit is mounted upon said tip.

References Cited in the file of this patent

UNITED STATES PATENTS

514,378	Neal	Feb. 6, 1894
2,711,171	Dunnican	June 21, 1955

FOREIGN PATENTS

12,222	Great Britain	1909
876,313	Germany	May 11, 1953
1,054,306	France	Oct. 7, 1953
1,058,229	France	Nov. 4, 1953