March 14, 1939. J. C. NELSON 2,150,454

AGITATOR FOR WASHING MACHINES

Filed March 7, 1936

FIG. 1.

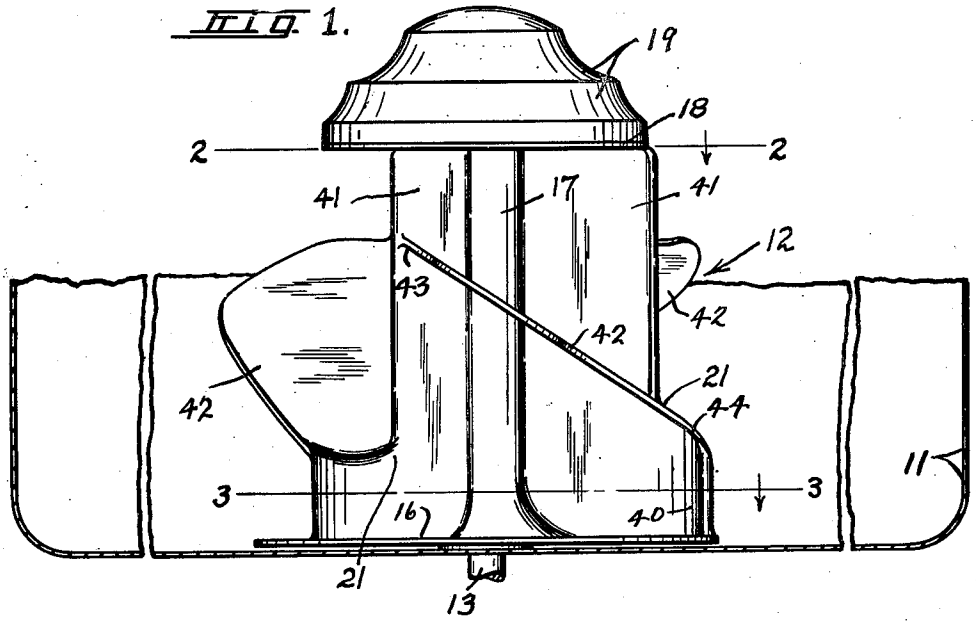

FIG. 2.

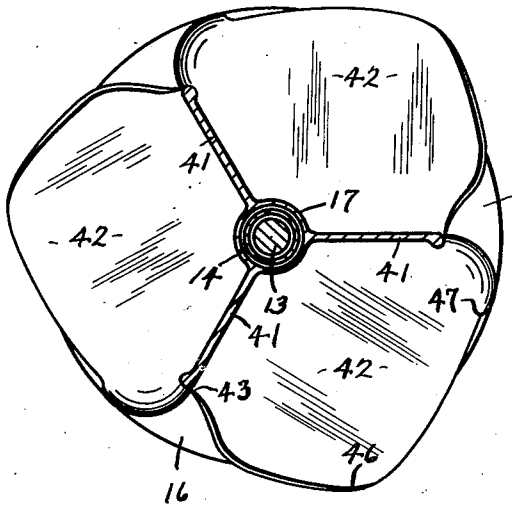

FIG. 3.

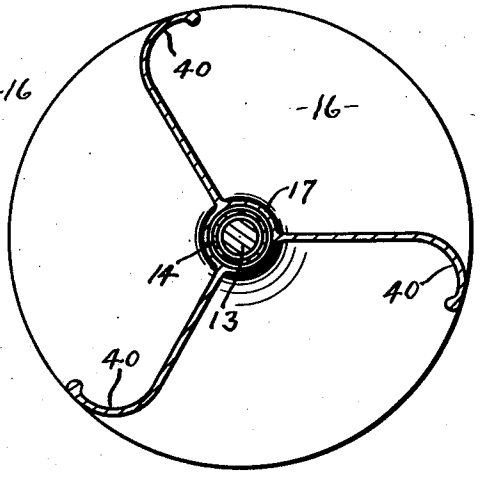

INVENTOR

Jabez Curry Nelson

BY

Theodore E. Simonton

ATTORNEY

WITNESS

J. T. Mains

Patented Mar. 14, 1939 2,150,454

UNITED STATES PATENT OFFICE

2,150,454

AGITATOR FOR WASHING MACHINES

Jabez Curry Nelson, Syracuse, N. Y., assignor to Easy Washing Machine Corporation, Syracuse, N. Y., a corporation of Delaware

Application March 7, 1936, Serial No. 67,686

7 Claims. (Cl. 68—134)

My invention relates to washing machines and, more particularly, to a novel agitator or dolly therefor.

An object of my invention is to provide an agitator, adapted to be mounted in a washing vat for oscillation therein, capable of cleansing the clothes thoroughly and in a minimum length of time.

A further object of my invention is the provision of an agitator for a washing machine which is so constructed and arranged that the entire body of clothes throughout the depth of the liquid in the vat is subjected to the washing action of the agitator.

My invention further contemplates the provision of an agitator for a washing machine having means for alternately raising and depressing the fabrics whereby the clothes are more evenly distributed in the vat, and the clothes are subjected to a washing action throughout the depth of the liquid.

More specifically, my invention contemplates the provision of an agitator having a plurality of substantially radial blades extending substantially from the bottom of the vat to or above the normal surface level of cleansing fluid, and a plurality of plates, each of the plates extending at an angle to the horizontal between a pair of adjacent blade faces and serving, when the agitator is oscillated, to alternately raise and depress the fabrics in the vat.

Other objects and advantages of my invention will be more apparent from the following description when taken in connection with the accompanying drawing, in which:

Figure 1 is a view showing the agitator of my invention and indicating a washing vat in which the agitator is mounted.

Figure 2 is a view taken on the line 2—2 of Figure 1.

Figure 3 is a view taken on the line 3—3 of Figure 1.

The agitator of my invention is adapted to be mounted in a vat or tub 11 in which the clothes and washing fluid are placed. The washing vat may be of any desired shape, either square or, as shown in the drawing, circular in cross section. The agitator, generally indicated by the numeral 12, is preferably mounted centrally of the vat 11 and is driven by a shaft 13 extending upwardly through the bottom of the vat. The drive shaft 13 may be driven by any suitable mechanism and from any suitable source of power, not necessary to be shown or described herein since such driving mechanism for oscillating the agitator is well known in the art to which this invention applies. Preferably, the shaft is driven in an oscillatory manner so as to drive the agitator through an arc of 180 degrees, more or less, and at a comparatively high rate of speed somewhere between fifty and sixty oscillations per minute.

The shaft 13 extends upward to or above the normal surface level of cleansing fluid, and the agitator 12 is preferably driven by the shaft in the manner described in the copending application of Peter Eduard Geldhof, Serial No. 55,050, filed December 18, 1935. A sleeve 14, extending concentric with the agitator shaft 13, provides additional support for the agitator, as set forth in said application.

The agitator itself comprises a preferably circular bottom plate or base 16 which may be substantially flat, as shown in the drawing. A central post or hub 17, formed integral with the base, extends upward from the base concentric with the sleeve 14. Near the top of the post 17, and preferably formed integral therewith, is a flat horizontal plate 18 which is preferably somewhat smaller in diameter than the diameter of the base 16. The top plate 18 marks the normal surface level of cleansing fluid and serves to prevent the upward splashing of cleansing fluid when the agitator is oscillated. A cap 19, of any suitable shape, is mounted on the top of the agitator and serves to enclose the driving connection between the shaft 13 and the agitator 12.

Extending radially outward from the post 17 are a plurality of blades 41 which extend from the base 16 to the top plate 18 and are preferably formed integral therewith. The upper portions of the blades extend outward and terminate at the periphery of the top plate 18 and these portions of the blades are, therefore, somewhat narrower in width than the radius of the base. Near their bottom portions, as at 21, the width of the blades increases. Below this point, the blades extend outward and terminate at the periphery of the base. Below the point 21, the blades are curved in horizontal cross section, as more clearly indicated in Figure 3, forming pockets 40, each of which faces in a clockwise direction.

Between each pair of adjacent blades 41, and extending at an acute angle of approximately 45 degrees to the vertical, is a plate 42. Each of the plates 42 is preferably a plane surface and extends from a point not far removed from the top of the blades 41, as from the point 43, to a point 44, approximately similarly spaced from the bottom of the blades. Each of the plates 42, from the point 43, which point, when projected

downward upon the base, is spaced inwardly from the outer circumference thereof, has its outer edge curved downward and outward to a point 46 where the plate 42 extends beyond the periphery of the base. From the point 46, the outer edge of each of the plates extends downward and curves slightly inward to a point 47 where the surface of the plate rounds downward and merges into the wide portion of the adjacent blade 41.

When the agitator is operated in a vat containing clothes and washing fluid, preferably being driven in an oscillatory manner, at a speed of oscillation and amplitude as above indicated, the clothes and washing fluid are violently agitated and the clothes are subjected, by the blades 41 and the plates 42, to a thorough thread-deforming action which serves to loosen the dirt particles. The plates 42 serve not only as blades causing an alternate upward and downward movement of the clothes in the vat, but also serve, in a measure, to more evenly distribute the clothes vertically in the vat. With the ordinary agitator structure, the clothes, when well water soaked, tend to sink toward the bottom of the vat. By reason of the action of the plates 42, the clothes, instead of settling substantially in a body toward the bottom of the vat, in addition to being buoyed up by the rapid oscillations of the agitator, are also, to a certain extent, retained in the upper section of the vat by the plates 42, thereby increasing the effectiveness of the upper portion of the blades 41. When the agitator is rotated in a clockwise direction, the blades 41 exert a powerful thrust on the clothes and washing fluid in that direction, and the plates 42 tend to push the clothes beneath the plates downward in a clockwise direction. When the agitator is reversed, the blades 41 exert a powerful thrust on the clothes and tend to cause them to move in a counterclockwise direction, and the plates 42 tend to push the clothes upward in a counterclockwise direction.

The pockets 40, because they all face in the same direction, tend to cause the clothes to move predominantly in a clockwise direction, but this tendency is largely overcome by the effect of the plates 42 and any tendency of the clothes to move in a clockwise direction is noticeable only at the bottom of the vat. The effect of the pockets 40 is overcome by reason of the fact that when the agitator is rotated in a clockwise direction, the plates 42 tend to cause the clothes and washing fluid to be circulated in a downwardly extending clockwise direction. When the agitator is rotated in the counterclockwise direction, the plates 42 tend to cause the clothes and washing fluid to circulate in an upwardly extending counterclockwise direction. However, because the action in the downwardly extending clockwise direction is partly resisted by the bottom of the vat, whereas, the action in the upwardly extending counterclockwise direction is not similarly resisted, the plates tend to cause a slight counterclockwise movement of the clothes and washing fluid. At times, a slight movement of the clothes near the surface of the cleansing fluid in a clockwise direction is noticeable.

While I have shown the preferred form of my invention, it will be apparent that various modifications and changes may be made in the form of the agitator and the relation of parts thereof without departing from the spirit of the appended claims.

I claim:

1. An agitator adapted to be mounted in a vat containing clothes and washing fluid, said agitator comprising a base, a central post extending upward to the normal surface level of cleansing fluid in the vat, a plurality of blades extending substantially radially outward from the base and from substantially the base to substantially the normal surface level of cleansing fluid, and a plate extending at an angle to the horizontal between each pair of adjacent blades, both faces of each of said plates being exposed to the clothes.

2. An agitator adapted to be mounted in a vat containing clothes and washing fluid, said agitator comprising a base, a central post extending upward from the base, a plate mounted near the top of the post and defining the normal surface level of cleansing fluid, a plurality of blades exposed to act upon the clothes and extending substantially radially outward from the post, each of said blades having at least a portion thereof curved in horizontal cross section, and a plate extending at an angle to the horizontal between each pair of adjacent blades, each of said plates having both faces exposed to the clothes.

3. An agitator adapted to be mounted in a vat containing clothes and washing fluid, said agitator comprising a base, a central post extending upward from the base, and a plurality of blades extending outward from the post, each of said blades having at least a portion thereof curved in horizontal cross section in the same direction, and a plurality of plates extending at an acute angle to the vertical, each of said plates lying between and being joined to a pair of adjacent blades.

4. An agitator adapted to be mounted in a vat containing clothes and washing fluid, said agitator comprising a base, a central post extending upward from the base, a top plate mounted near the top of the agitator and marking the normal surface level of cleansing fluid, a plurality of blades extending substantially radially outward from the post, said blades near their lower portions being increased in width and being curved in horizontal cross section, and a plate extending at an angle to the horizontal between each pair of adjacent blades, each of said plates merging at its lower portion with the widened portion of the adjacent blade.

5. An agitator adapted to be mounted in a vat containing clothes and washing fluid, said agitator comprising a base, a central post extending upward to the normal surface level of cleansing fluid in the vat, a plurality of blades extending substantially radially outward from the base, and a plate having its entire surface lying above the lower edges of the blades and extending at an angle to the horizontal between and joined to each pair of adjacent blades.

6. An agitator adapted to be mounted in a vat containing clothes and washing fluid, said agitator comprising a base, a central post extending upward to the normal surface level of cleansing fluid in the vat, a plurality of blades exposed to act upon the clothes and extending substantially radially outward from the base and from substantially the base to the normal surface level of cleansing fluid, and a substantially flat plate lying above the lower edges of the blades and extending at an angle to the horizontal between and being joined to each pair of adjacent blades, each of said plates being exposed to the clothes and adapted to exert a

raising and lowering action thereon as the agitator is oscillated.

7. An agitator adapted to be mounted in a vat containing clothes and washing fluid, said agitator comprising a base, a central post extending upward from the base, a top plate mounted near the top of the agitator and marking the normal surface level of cleansing fluid, a plurality of blades extending from the base to the plate and extending substantially radially outward from the post, said blades near their lower portions being increased in width and being curved in horizontal cross section, and a plate extending at an angle to the horizontal between each pair of adjacent blades, each of said plates merging at its lower portion with the wider portion of the adjacent blade and being exposed to the clothes and being adapted to exert a raising and lowering action thereon as the agitator is oscillated.

JABEZ CURRY NELSON.