April 20, 1926. 1,581,800

H. HELLWEG

COLLAPSIBLE BOX

Filed April 18, 1921 2 Sheets-Sheet 1

Fig. 1.

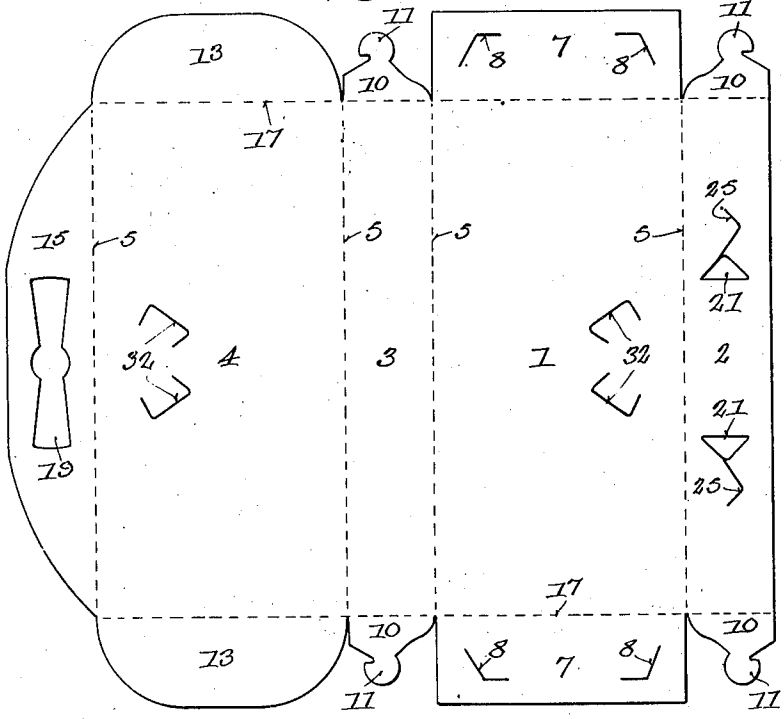

Fig. 2.

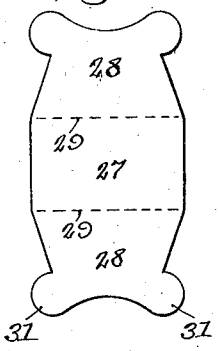

Fig. 3.

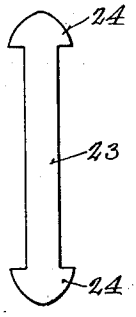

Fig. 4.

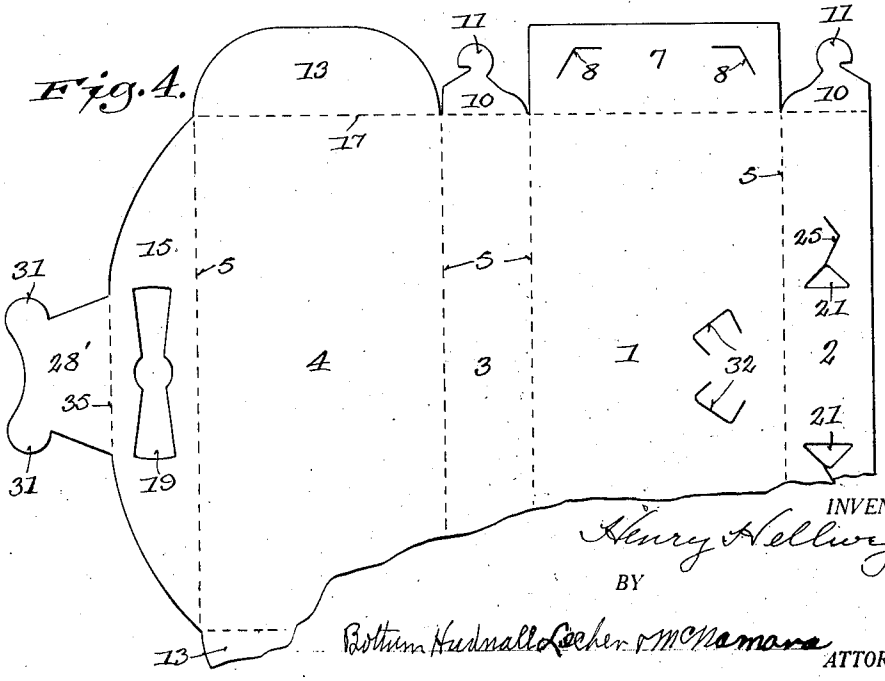

INVENTOR:
Henry Hellweg,
BY
Bottum Hudnall Cocher & McNamara
ATTORNEYS.

April 20, 1926. 1,581,800

H. HELLWEG

COLLAPSIBLE BOX

Filed April 18, 1921 2 Sheets-Sheet 2

Fig. 5.

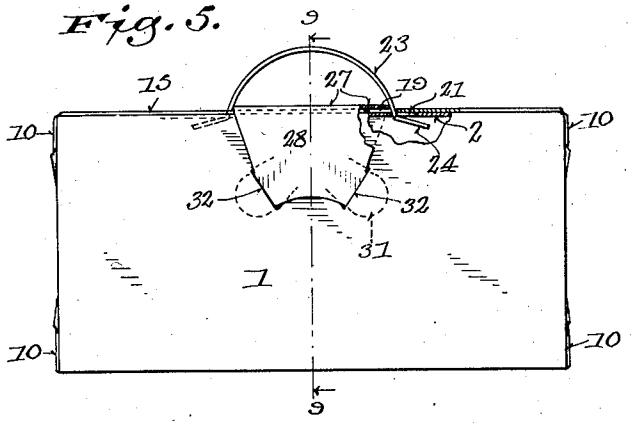

Fig. 6.

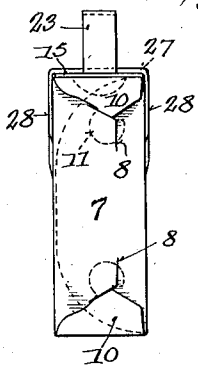

Fig. 7.

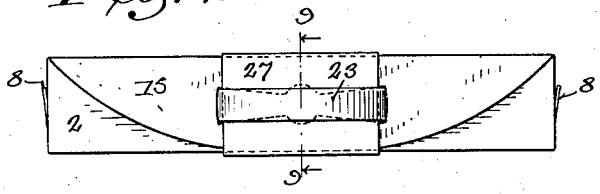

Fig. 8.

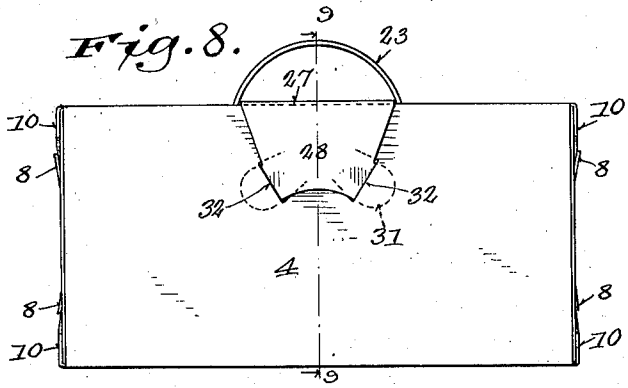

Fig. 9.

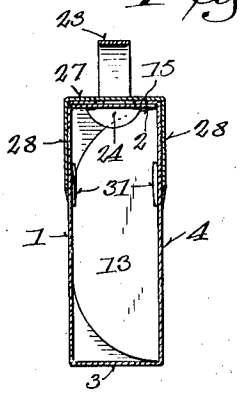

Fig. 10.

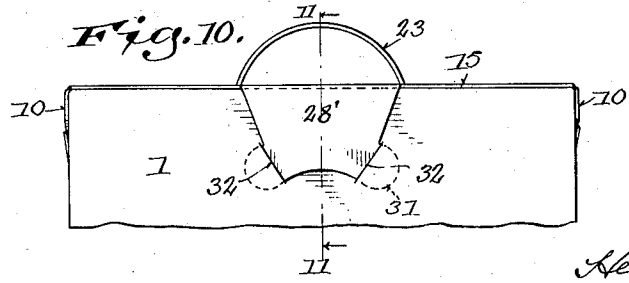

Fig. 11.

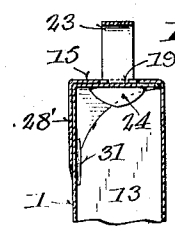

INVENTOR:
Henry Hellweg
BY
Bottum Hudnall Leeher & McNamara
ATTORNEYS.

Patented Apr. 20, 1926. 1,581,800

UNITED STATES PATENT OFFICE.

HENRY HELLWEG, OF MILWAUKEE, WISCONSIN.

COLLAPSIBLE BOX.

Application filed April 18, 1921. Serial No. 462,119.

To all whom it may concern:

Be it known that I, HENRY HELLWEG, a citizen of the United States, residing at Milwaukee, in the county of Milwaukee and State of Wisconsin, have invented certain new and useful Improvements in Collapsible Boxes, of which the following is a specification, reference being had to the accompanying drawing, forming a part thereof.

The main objects of this invention are to provide a folding knock-down or collapsible box having the body and cover made in one piece, which can be easily and quickly set up and knocked down or collapsed, which when set up will retain its shape, and may be conveniently used as a suit or carrying case, and generally to reinforce or strengthen and improve the construction of folding boxes of the type to which the invention pertains.

It consists in the construction, arrangement and combination of parts as hereinafter particularly described and pointed out in the claims.

In the accompanying drawing like characters designate the same parts in the several figures.

Figure 1 is a plan view of a flat blank as formed for making a collapsible box embodying the invention; Fig. 2 is a similar view of a blank for a fastening and reinforcing member to be used in connection with the blank shown by Fig. 1; Fig. 3 is a similar view of a strap handle for the box; Fig. 4 is a view similar to Fig. 1, of a flat box blank of a modified form; Figs. 5, 6 and 7 are side, end and top views respectively of a box as made from the blanks shown in Figs. 1, 2 and 3; Fig. 8 is a reverse side elevation of the box shown in Fig. 5; Fig. 9 is a vertical cross section on the line 9—9, Figs. 5, 7 and 8; and Figs. 10 and 11 are respectively a partial side elevation and a partial vertical cross section on the line 11—11, Fig. 10, of a box made from the blanks shown in Figs. 3 and 4.

Referring to Figs. 1, 2 and 3, the box, which may be made of heavy paper, pasteboard or other suitable flexible material, comprises main members or sections 1, 2, 3 and 4, formed integrally with one another from a single sheet of material. These members or sections have parallel longitudinal hinge connections with one another, indicated on Fig. 1 by dotted lines 5, along which the blank is preferably scored or creased, to facilitate folding.

The member 1, which may be designated the bottom member, is formed at the ends with upwardly or inwardly folding flaps 7, which are formed with angular slits 8. The members 2 and 3, which may be designated as the side members, are formed at the ends with inwardly folding flaps 10, terminating in hooked tabs 11, adapted to interlock with the slits 8 in the end flaps of the bottom member when the box is set up, the flaps 10 being preferably folded over the outer sides of the flaps 7, as shown in Fig. 6, and the tabs tucked inwardly through the slits.

The member 4, which may be designated as the cover member, is formed with downwardly or inwardly folding end flaps 13, which are adapted to close inside of and reinforce the ends of the box formed by the flaps 7 and 10, as shown in Fig. 9.

The cover member 4 is formed on the side opposite the side member 3 with a flap 15, adapted when the box is erected, to fold over and to reinforce the side member 2.

The flaps 7, 10 and 13 fold on transverse lines which are preferably scored or creased in the blank, as indicated by dotted lines 17 in Fig. 1, to facilitate folding. The cover flap 15 is formed lengthwise thereof with an elongated handle opening 19, preferably of double keyhole shape, as shown, or widened at the ends.

The side member 2 is formed with handle openings 21, preferably of triangular shape and arranged to register with the ends of the opening 19 when the box is erected and the flap 15 is folded over the member 2.

The opening 19 is located centrally in the flap 15, and the triangular openings 21 are located equidistant from the transverse center of the member 2, with their bases towards and parallel with each other.

A strap handle 23, shown in Fig. 3, formed with arrow-head or enlarged ends 24, is adapted to be inserted through the flap opening 19 and engaged with the openings 21 in the underlying side member 2, when the box is erected, as shown in Figs. 5, 6, 7, 8 and 9,

the member 2 being preferably formed with angular slits 25, extending from the apexes of the openings 21 towards the ends of said member, to facilitate the insertion of the arrow-head or enlarged ends 24 in the openings 21 and their interlocking engagement therewith.

The opening 19 being narrower at or adjacent the middle than the width of the strap handle 23 which is drawn outwardly through it in closing the box, tends to hold the handle in operative position with its arrow-head or enlarged ends 24 in engagement with the under or inner face of the member 2, as shown in Figs. 5 and 9, the handle thus serving to hold the flap 15 against the member 2 and to lock the box closed, as well as convenient means for carrying the box. The opening 19 is preferably enlarged at the center, as shown in Fig. 1, for insertion of the thumb and finger, to facilitate drawing the strap handle outwardly through it in closing and locking the box.

To reinforce the handle attachment and further secure the flap 15 in its closed position and to support the handle in operative position, the box is provided with a separate fastening and reinforcing member 27, shown by itself spread flat, in Fig. 2, and as applied to an erected box, in Figs. 5 to 9 inclusive. This member is formed with flaps 28, folding on the transverse score lines 29 against the outer sides of the box members 1 and 4. The flaps 28 are formed with tabs 31, for insertion through and interlocking engagement with slits 32, formed in the members 1 and 4. The tabs 31, preferably two at each end of the member 27, project laterally and obliquely from the flaps 28, and the slits 32 are preferably of U shape and disposed obliquely to and equidistant from a line passing centrally and transversely through the members 1 and 4. The member 27, between the flaps 28, corresponding in width to the distance between the handle openings 21, nearly covers the opening 19 in the flap 15, and engages at its edges with the under or inner side of the handle adjacent its enlarged ends 24, thereby supporting the handle in operative position, reinforcing the box adjacent the points of attachment of the handle, and distributing the weight of the box and its contents carried by the handle, to different parts of the box.

Referring to Fig. 4, in connection with Figs. 10 and 11, the fastening and reinforcing member for holding the flap 15 closed and to a certain extent distributing the weight carried by the handle to different parts of the box, may be formed as a flap 28′ integrally with the flap 15, and provided with tabs 31 like those of the fastening and reinforcing member 27, to interlock with slits 32 in the bottom member 1. The flap 28′ folds on a line 35, preferably creased or scored, parallel with the score or folding lines 5, as indicated in Fig. 4.

In other respects the modified construction shown by Figs. 4, 10 and 11 is like that shown by the other figures of the drawing and hereinbefore described.

The construction shown in Figs. 1, 2, 3, 5, 6, 7, 8 and 9 is preferable for boxes of larger size designed for carrying bulky or heavy articles, and for frequent use as a suitcase, while the modified construction shown in the other figures of the drawing is suitable for boxes of smaller size designed to carry or contain less bulky or lighter articles, and for occasional use as a suitcase.

I claim:

1. A collapsible box comprising bottom, side and cover members formed integrally and hinged together, the cover member formed with a side flap adapted to fold over the side member opposite that to which the cover member is attached, and a fastening and reinforcing member adapted to extend across the side cover flap and to fold over and interlock with the bottom and cover members.

2. A collapsible box comprising bottom, side and cover members formed integrally and hinged together, the cover member formed with a side flap adapted to fold over and to reinforce the side member opposite that to which the cover member is attached, the bottom and cover members formed midway between the ends with slits, and a fastening and reinforcing member adapted to extend across the side cover flap and having flaps adapted to fold upon the bottom and cover members and provided with tabs to interlock with the slits therein.

3. A collapsible box comprising integrally formed hinge-connected bottom, side and cover members, the cover member having a side flap formed with a handle opening and adapted to fold over one side member which is formed with handle openings registering with the ends of the handle opening in the flap, a strap handle passing through the opening in the cover flap and having enlarged ends interlocking with the openings in the underlying side member, and a fastening and reinforcing member adapted to extend across the cover flap over the handle opening therein underneath the handle and to fold at the ends over and interlock with the bottom and cover members.

4. The combination with a box of the character described comprising bottom, side, and cover members, of a fastening and reinforcing member folded over one of said side members and interlocking with adjacent portions of said bottom and cover members.

5. The combination with a box of the

character described comprising bottom, side, and cover members, of a fastening and reinforcing member folded over one of said side members and interlocking with adjacent portions of said bottom and cover members, and a handle having the ends thereof inserted through said side member and engaging with opposite edges of said fastening and reinforcing member whereby said handle is held in operative position.

In witness whereof I hereto affix my signature.

HENRY HELLWEG.