March 22, 1932. M. D. AISENSTEIN 1,850,614

DEVICE FOR PACKING DRIVE SHAFTS OF HOT OIL PUMPS

Filed Jan. 4, 1930 2 Sheets-Sheet 1

Fig. 1.

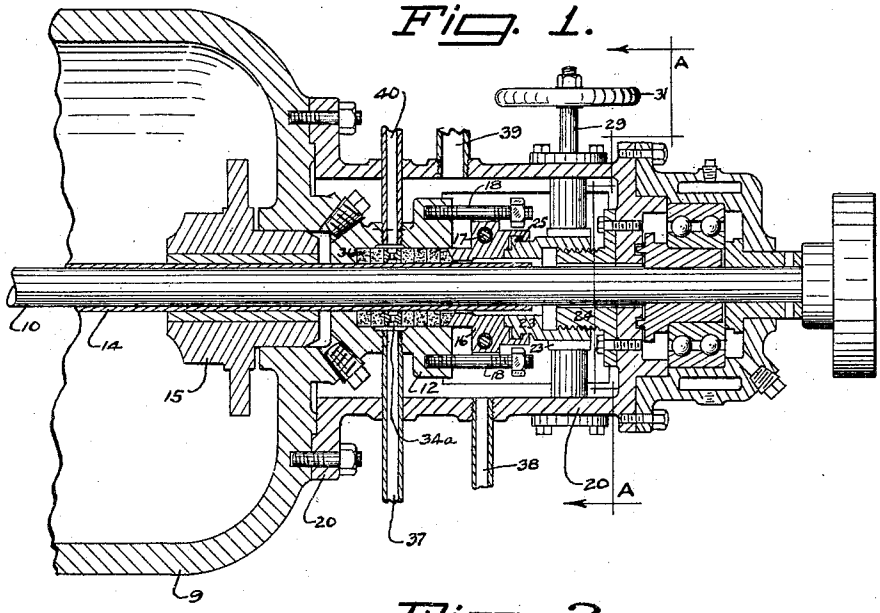

Fig. 2.

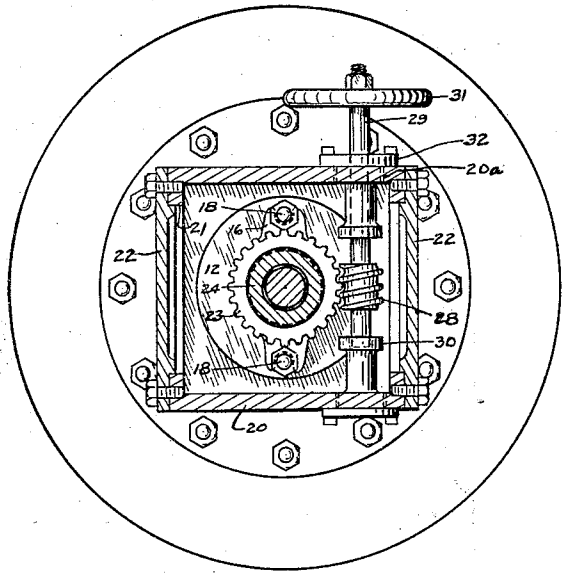

INVENTOR
MICHAEL D. AISENSTEIN
BY
George F. Ballay
ATTORNEY

March 22, 1932. M. D. AISENSTEIN 1,850,614

DEVICE FOR PACKING DRIVE SHAFTS OF HOT OIL PUMPS

Filed Jan. 4, 1930 2 Sheets-Sheet 2

Fig. 3.

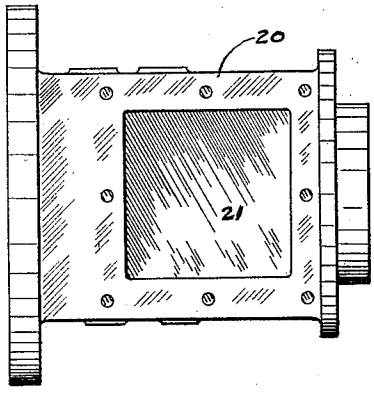

Fig. 4.

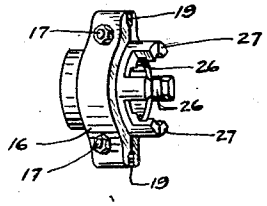

Fig. 5.

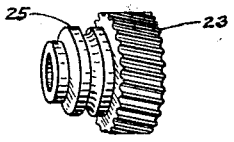

Fig. 6.

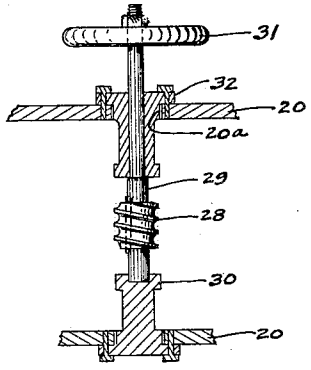

Fig. 7.

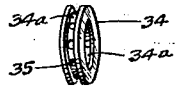

INVENTOR
MICHAEL D. AISENSTEIN
BY
George F. Ballay
ATTORNEY

Patented Mar. 22, 1932 1,850,614

UNITED STATES PATENT OFFICE

MICHAEL D. AISENSTEIN, OF BERKELEY, CALIFORNIA, ASSIGNOR TO UNITED IRON WORKS, OF OAKLAND, CALIFORNIA, A CORPORATION OF CALIFORNIA

DEVICE FOR PACKING DRIVE SHAFTS OF HOT OIL PUMPS

Application filed January 4, 1930. Serial No. 418,535.

This invention relates to a new and useful device for packing pumps and especially relates to an improved method for packing drive shafts of hot oil pumps so that the escaping of hot oil and gas past the packing to the air where it can flash will be positively eliminated.

In pumps that are used for pumping hot oils and gasoline, it is a very difficult problem to pack the packing box, where the shaft enters the pump, in such a manner as to positively prevent any leakage of gas and oil. It is not only very important, but is absolutely necessary to prevent any hot oil or gas, whatever, from leaking past the packing and coming in contact with the air, when it is hot, due to the fact that oils having excessively high temperatures will immediately flash into flame the moment they come in contact with the air, causing much trouble and resulting in much serious danger. Different devices have been provided and various methods used to eliminate this trouble, all of which have certain disadvantages. The providing of a flame shield around the packing gland is impractical due to the fact that the shield must be removed each time it is necessary to re-pack the pump shaft, and also, due to the fact that the shield will not prevent the hot oil from flashing but is merely a means to confine the flame and does not positively eliminate the danger.

It is therefore an object of the present invention to improve the present devices and methods used for packing hot oil pumps by providing positive means to reduce the temperature of any escaping oil and which will absorb the gases thereof and to also provide means that will exclude air at atmospheric pressure from around the packing box and gland and thus positively prevent any hot oil from coming in contact with the air and thereby positively prevent any and all possibility of the hot oil flashing.

In other words, it is an object of the present invention not merely to provide means to confine the flame caused by the hot oil flashing and thus reduce the danger, but it is an object to provide means that will actually prevent the flashing and thereby not merely reduce the danger, but positively eliminate the cause.

To be more specific, it is one of the objects of the present invention to reduce the temperature of the hot oil, that leaks past the packing, by providing a ring between the sections of the packing that will form a chamber therein which will catch the escaping hot oil, and to convey cold oil through said chamber and thereby reduce the temperature of the escaping hot oil and also absorb the gases thereform, thus eliminating much danger caused by the hot oil flashing when it comes in contact with air.

It is another object of the invention to completely enclose the packing box and gland in a chamber and to supply said chamber with non-inflammable gases or any suitable fluid and thus exclude the air from around the gland and packing box.

It is another object of the invention to provide an improved mechanism for operating and controlling the packing gland, the said mechanism including an improved form of packing gland and means for guiding same and an especially constructed internally threaded worm wheel operated by a screw within the chamber, the said screw being controlled by a hand-wheel outside of the chamber.

It is a further object of the invention to construct and arrange the packing gland and mechanism for controlling same in such a manner that they may be quickly dismantled, and to provide openings with cover plates thereon, in the packing gland chamber, so that the packing box may be quickly repacked without removing the chamber or disturbing any of the bearings or working parts of the pump.

The invention possesses other objects and features of advantage, some of which, with the foregoing, will be made manifest in the following description of the preferred form of the invention that is illustrated in the drawings accompanying and forming part of the specification.

It is to be understood that it is not intended to limit the invention to the embodiment shown by said drawings and description, as variations may be adapted within the scope of the invention as set forth in the claims.

In the accompanying drawings:

Figure 1 is a central longitudinal sectional view of one end of a pump with the drive shaft extending therefrom, and shows the packing gland enclosed within a chamber and the preferred construction and arrangement of the parts involved in the invention.

Figure 2 is an end sectional view taken on line A—A of Figure 1, looking in direction of the arrows.

Figure 3 is a side elevational view of the packing box and gland chamber with the cover plate removed.

Figure 4 is a perspective view of a preferred form of packing gland used in the invention.

Figure 5 is a perspective view of a preferred form of the adjusting worm wheel used in the invention.

Figure 6 is a longitudinal partial sectional view of the worm wheel screw assembly.

Figure 7 is a perspective view of one type of ring that is mounted between the packing sections to form the chamber that is connected to the cold oil supply.

Referring in detail to the different parts wherein like reference numerals designate corresponding parts throughout the several views, the numeral 9 designates one end of an ordinary standard pump casing and the numeral 10 designates a revolvable drive shaft that extends therefrom. The numeral 9 may designate either the casing direct or the casing end cover that is fastened thereon. The numeral 12 designates an ordinary packing box that is provided on the casing or end cover, 14 a replaceable sleeve that is mounted on the shaft, and 15 one of the bearings on which the shaft is supported. The packing gland 16 is preferably split on a vertical plane and the two halves are held together by bolts 17 as shown in Figure 4. Studs or bolts 18 are provided in the end of the packing box and are adapted to extend through slots 19 that are provided through the top and bottom ends of the packing gland flange to properly guide the gland and prevent it from being circumferentially moved. The packing box and gland are completely enclosed in a housing 20 that is fastened to the casing. An opening 21, having a cover thereon 22, is provided in each side of the housing so that the drive shaft 10 may be quickly re-packed without removing the housing 20 from the casing.

A preferred method to operate and control the packing gland 16 consists in providing an especially constructed and internally threaded worm wheel 23 and mounting the said worm wheel on a threaded member 24 that is fastened to the housing 20 as shown in Figure 1. The worm wheel has a hub portion that is provided with a circular projection or rim 25 that is constructed to fit in arc-shaped or circular grooves 26 that are provided in the packing gland. The present construction shows a plurality of lips 27 provided on one end of the packing gland. A complete hub may be provided on the packing gland instead of the lips if desired and a complete circular groove cut in the said hub that will fit on the rim 25 that is provided on the hub portion of the worm wheel. Revolvable movement is imparted to the worm wheel by means of a screw 28 that is mounted in the housing 20 as shown in Figure 2 and it will be seen that when the said worm wheel is revolved, due to the fact that it is threaded on the member 24, it will move on the threaded member either forward or backward according to which direction the screw is turned.

It is necessary to operate the screw from outside of the housing 20 and also important to construct and arrange the parts so that they may be very easily and quickly dismantled. Figure 6 shows the screw fixed on a shaft 29, the bottom end of which is supported on a bearing seat 30 within the housing 20 and the upper end extending outside of the housing and is provided with a handwheel 31 as illustrated. The shaft is supported by another bearing 32 that is fastened to the top of the housing 20. This bearing extends through an opening 20*a* that is provided in the top of the housing 20 and the said opening 20*a* has a diameter that is greater than the outer diameter of the screw 28 so that when it is necessary to remove the screw from the housing, the said bearing and screw may be lifted out of said opening.

As hereinbefore stated, one of the objects of the present invention is to cool the hot oil that leaks along the drive shaft past the packing. In Figure 7 there is shown a ring 34 that is provided with a circular groove 34*a* around both the outer and inner peripheries thereof and a plurality of holes or ports 35 that connect the grooves together. The ring is mounted between the packing sections 36 as shown in Figure 1 and it will be seen that a chamber is formed around the shaft and between the packing sections that will catch the hot oil as it leaks from the pump. A pipe 40 is provided through the top of the packing box and leads to said ring and another pipe 37 is provided in the bottom of the packing box and leads from said ring. When the pump is in operation and is pumping hot oil, cold oil is supplied through

the pipe 40 and passes through the chamber formed by the ring around the drive shaft and is then conveyed to any suitable reservoir outside of the pump through the pipe 37, thus cooling any and all hot oil that leaks around the drive shaft and also absorbing any gas that forms from the hot oil. It is to be understood that the present invention exists not merely in the construction and arrangement of the parts used to convey the cold oil but rather in the application of cold oil around the drive shaft to cool the hot oil that leaks along the drive shaft and absorb the gases that form from the hot oil.

Another object of this invention is to exclude air from the housing chamber around the packing box and gland and thereby positively prevent any and all possibility of any flashing of the gas should any pass by the cold oil chamber in the packing box and escape out of the packing box where it would flash into flame. To this end steam or non-inflammable gas from any suitable source of supply is conveyed into the housing chamber through the pipe inlet 38 and is carried out of the said chamber through pipe outlet 39 and will thus continuously absorb any and all gas that forms from the hot oil and escapes out of the packing box.

Having thus illustrated and described a certain form of construction and arrangement of parts pertaining to the invention, it is to be understood that any suitable method may be used to cool the hot oil and absorb the gases that pass along a hot oil pump drive shaft, the present construction and arrangement of parts not being utilized as indicating the only method that may be used, also that any suitable method may be used to continuously exclude air from around the packing gland and also that the parts provided to operate and control the packing gland may be made in any suitable size or shape; and it is further desired to include in this application for Letters Patent of the United States of America, any and all patentable novelty that exists in the invention disclosed and all that comes within the fundamental principle of the invention as set forth in the claims hereinafter mentioned.

What is claimed is:

1. A device for packing hot oil pump drive shafts, having in combination, a packing box surrounding the shaft; a grooved ring for forming a chamber around said shaft in the packing box; an inlet and outlet leading transversely from the packing box and constructed to convey cold oil through said ring and around said shaft; a housing forming a chamber around the packing box; a packing gland within said chamber; means for adjusting and controlling said packing gland outside of said chamber; and an inlet and outlet for conveying non-inflammable fluid through said chamber.

2. A device for packing hot oil pump drive shafts, having in combination, a packing box surrounding the shaft; a grooved ring for forming a chamber around said shaft in the packing box; an inlet and outlet leading transversely from the packing box and constructed to convey cold oil through said ring and around said shaft; a housing forming a chamber around the packing box; an inlet and outlet in the housing walls of said chamber; a vertically split packing gland mounted on said shaft within said chamber; means for adjusting and controlling said packing gland outside of said chamber; an opening in each lateral side wall of the chamber opposite the packing gland; and a cover plate mounted over each opening and fastened detachably to the housing.

3. A device for packing hot oil pump drive shafts, having in combination, a packing box surrounding the shaft; a grooved ring for forming a chamber around said shaft in the packing box; an inlet and outlet leading transversely from the packing box and constructed to convey cold oil through said ring and around said shaft; a housing forming a chamber around the packing box; an inlet and outlet in the housing walls of said chamber; a split packing gland mounted on said shaft within said chamber; an opening in the wall of the chamber adjacent the packing gland; a cover plate for said opening; a threaded member arranged around said shaft in said chamber and fastened to said housing; an internally threaded worm wheel mounted on said threaded member and adapted to engage therewith; means for revolubly engaging the worm wheel with the packing gland; a screw revolubly supported in said chamber and adapted to engage with said worm wheel and adjust the packing gland; said screw having a shaft that extends outside of the chamber; and a handle provided on the outer end of said shaft to adjust the packing gland from outside of the chamber.

4. A device for packing hot oil pump drive shafts, having in combination, a packing box surrounding the shaft; a grooved ring for forming a chamber around said shaft in the packing box; an inlet and outlet leading transversely from the packing box and constructed to convey cold oil through said ring and around said shaft; a housing forming a chamber around the packing box; an inlet and outlet in the housing walls of said chamber; a split packing gland mounted on said shaft within said chamber; an opening in the wall of the chamber adjacent the packing gland; a cover plate for said opening; a threaded member arranged around said shaft in said chamber and fastened to said housing; an internally threaded worm wheel mounted on said threaded member and adapted to engage therewith; said worm wheel and packing gland being engaged together by means

of a circular ridged and grooved joint; means for guiding the packing gland to prevent it from being circumferentially moved; a screw revolubly supported in said chamber and adapted to engage with said worm wheel and adjust the packing gland; said screw having a shaft that extends outside of the chamber; and a handle provided on the outer end of said shaft to adjust the packing gland from outside of the chamber.

In testimony that I claim the foregoing I have hereto set my hand this thirtieth day of December, 1929.

MICHAEL D. AISENSTEIN.