Nov. 8, 1966 R. F. DUROCHER ETAL 3,283,893

METHOD OF BUNDLING PIPE, ROD AND LIKE ARTICLES

Filed Nov. 2, 1964 2 Sheets-Sheet 1

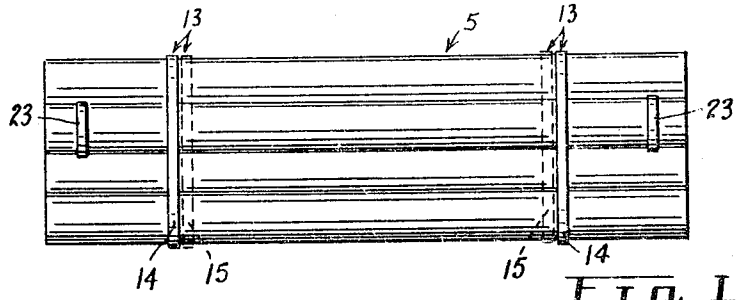

Fig. 1

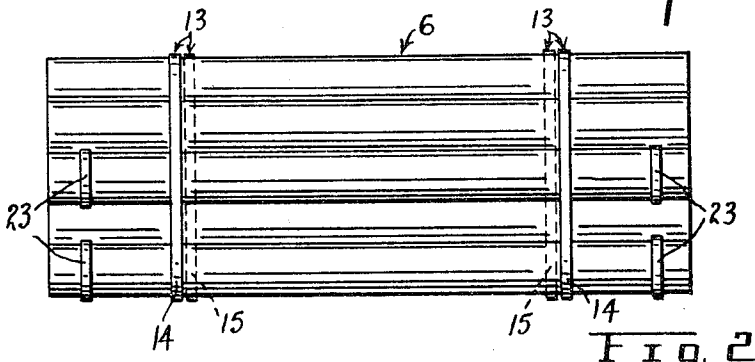

Fig. 2

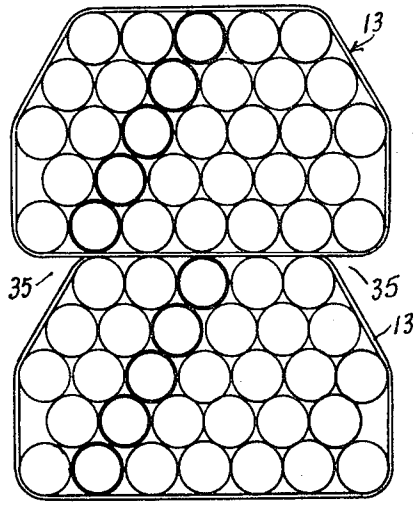

Fig. 8

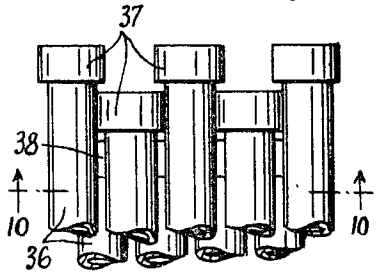

Fig. 9

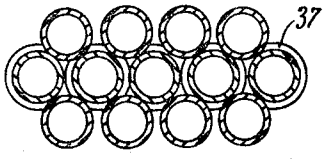

Fig. 10

INVENTORS
R.F. DUROCHER
A.J. LEROUX
B.J. Mc HUGH

Fetherstonhaugh & Co.
ATTORNEYS

Nov. 8, 1966 R. F. DUROCHER ETAL 3,283,893

METHOD OF BUNDLING PIPE, ROD AND LIKE ARTICLES

Filed Nov. 2, 1964 2 Sheets-Sheet 2

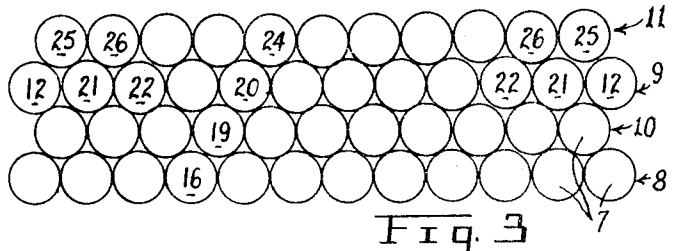

Fig. 3

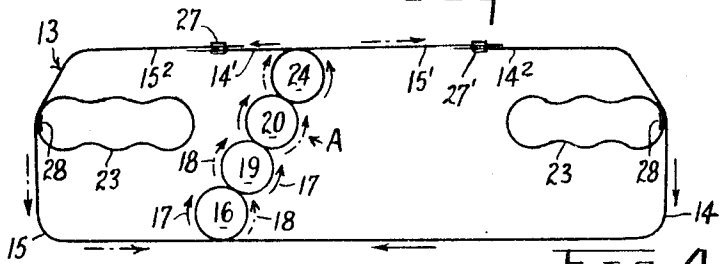

Fig. 4

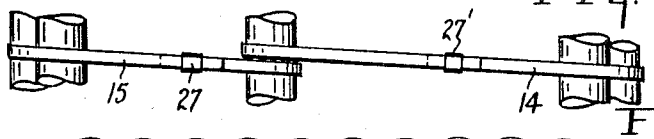

Fig. 5

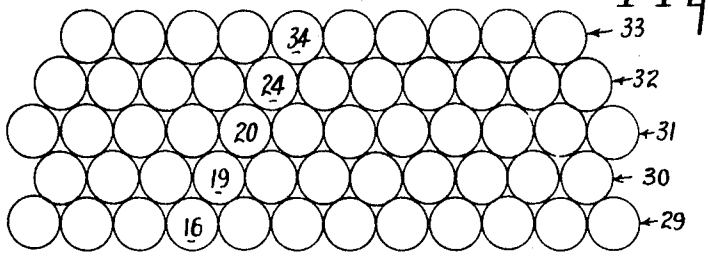

Fig. 6

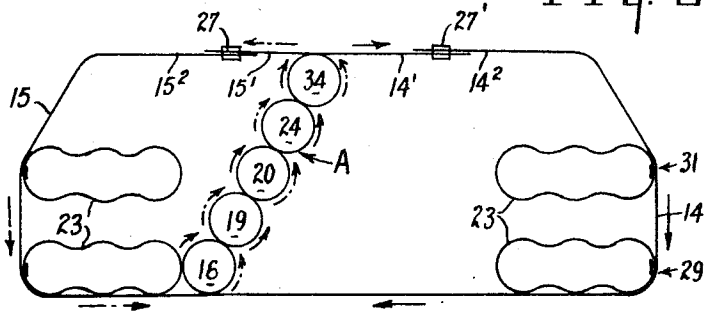

Fig. 7

INVENTORS
R. F. DUROCHER
A. J. LEROUX
B. J. Mc HUGH

Fetherstonhaugh & Co.
ATTORNEYS

United States Patent Office

3,283,893

Patented Nov. 8, 1966

3,283,893

METHOD OF BUNDLING PIPE, ROD AND LIKE ARTICLES

Robert F. Durocher, Montreal, Quebec, Alfred J. Leroux, Ville Jacques Cartier, Quebec, and Bernard J. McHugh, Montreal, Quebec, Canada, assignors to Bell Asbestos Mines Ltd., Quebec, Canada

Filed Nov. 2, 1964, Ser. No. 408,038

13 Claims. (Cl. 206—65)

This invention relates to bundling of pipe and like articles and particularly to a method whereby the bundle is given added stability and breakage of the pipe during transportation and when the bundle is opened, is reduced to a minimum.

The bundling and transportation of pipe and like articles, and particularly of asbestos-cement pipe has always presented problems in ensuring that the bundles, when strapped, will remain stable during all stages of transportation. This has been overcome to some extent by inserting spacing boards between the various tiers of pipe and nailing wedges to the spacing boards to prevent sideways movement of the pipes on the board, and then strapping the complete bundle. The great objection to this form of bundling is that the cost of the spacing boards and wedges is considerable, not only in material but in manpower. A further objection to this form of bundling is that the spacing boards add considerable to the overall height of each bundle and, when bundles are stacked one above the other on a vehicle or railroad car, the volume of space required restricts the number of bundles which can be carried.

Still a further objection to the present method of bundling pipe is that considerable vertical height is taken up by the use of pallets between bundles.

Efforts to overcome the above objections have been taken, such as is disclosed in Canadian Patent No. 677,398 where the various tiers of pipe are nested with each other and the straps are applied to the bundle in the form of a figure eight, with the top and bottom loops of the figure eight embracing a number of tiers. The objection to this form of bundling is that, when the straps are cut there is nothing to prevent the pipes from falling sideways. This could result in considerable breakage of asbestos-cement pipe.

The present invention seeks to overcome the above difficulties and consists essentially in the use of pairs of straps laid side by side, one pair being located adjacent each end of the bundle to be built up. A first layer of pipe is then laid across the pairs of straps and the oppositely running ends of the pairs of straps are threaded about one of the pipes inwardly from one side. The pipe about which the straps is threaded is selected depending upon the size of the bundle to be built up. For a small bundle, the pipe selected could be the second from one side, and for larger and wider bundles, any convenient pipe from one side of the bundle, is selected. A second layer of pipe is then nested in the pipes of the first layer and the straps threaded about the pipe in the first layer are then threaded about the adjacent pipe in the second layer which is located inwardly of the bundle. The straps threaded about the selected pipes take a reverse direction and so lock these pipes in a vertically angled configuration. Succeeding layers of pipe are nested in the pipes of the layer immediately below with the straps locking a pipe in the layer until the topmost layer is laid in place. The straps of the pair which are threaded about the pipe in the topmost layer of the bundle are directed in opposite directions from each other and are brought together with the opposite ends of the pair of straps which are directed outwards from each side of the bottom of the bundle, and

are tightened and clamped together in the usual manner to secure the bundle.

The reverse threading of the pair of straps about one pipe in each layer of the bundle, which pipes are disposed at an angle, and with the clamping of the straps on completion of the bundle, the pipes held by the threaded straps form a structural member disposed diagonally of the bundle providing great stability to the nested pipes on each side.

In order that the bundle of pipes on either side of the diagonally strapped pipes will not fall outwards when the straps are cut, three outer pipes in selected layers are bound together with separate straps, which straps are allowed to remain slack until the bundle is complete and tightly nested and are then tightly clamped. The effect of binding these three pipes together is to provide an anchor with the pipes of the layer immediately below and so hold the nested pipes of the layer immediately above against sideways movement when the main bundle binding straps are cut. In this manner, after the main bundle binding straps are cut, the individual pipes in each layer can be lifted clear, without damage. The horizontally tied pipes in the separate layers combine with the diagonally tied pipes to give added stability to the complete bundle. The topmost layer of pipe are all nested with the pipes of the layer below thus providing a space under the lowermost layer of the bundle stacked above whereby the bundle stacked above can be easily lifted, without the use of a pallet between stacked bundles. For convenience, either 4" x 4" or 3" x 5" stringers may be placed at approximately the third point on the load of stacked bundles, if desired.

The object of the invention is to provide a method of bundling pipe whereby maximum stability will be given the bundle permitting transport of the pipe under the most adverse conditions.

A further object of the invention is to reduce the size of the bundle of pipe without reduction in the number of pipes in the bundle.

A further object of the invention is to interlock one pipe in each layer with each other to provide a diagonally disposed structural element in each bundle of pipe.

A further object of the invention is to provide bundles of pipe which can be stacked one above the other without the use of separating pallets or two-by-fours.

A further object of the invention is to provide a strapped bundle of pipe in which the pipes in each layer of the bundle will stay in position after the main straps have been cut.

These and other objects of the invention will be apparent from the following detailed description and the accompanying drawings, in which:

FIG. 1 is a side elevation of a bundle of pipe incorporating the present invention.

FIG. 2 is a side elevation of another bundle of pipe incorporating the present invention.

FIG. 3 is an end view diagram of the bundle of pipe shown in FIG. 1.

FIG. 4 is an end view diagram showing the method of strapping the bundle of pipe shown in FIG. 1.

FIG. 5 is a partial plan view showing one pair of straps in the clamped position.

FIG. 6 is a diagram similar to FIG. 3 but showing the arrangement of pipes in the bundle shown in FIG. 2.

FIG. 7 is a diagram similar to FIG. 4 but showing the method of strapping the bundle of pipe shown in FIG. 2.

FIG. 8 shows two bundles of pipe, strapped according to the present invention, stacked one above the other.

FIG. 9 is a partial plan view showing the method of nesting bell-ended pipes to obtain the benefit of the method of bundling shown in FIGS. 1 and 2.

FIG. 10 is a vertical section taken on the line 10—10 of FIG. 9.

Referring to the drawings, the bundles of pipe 5 and 6, respectively, shown in FIGS. 1 and 2 are typical only. It is to be understood that the bundles can be made of any desired number of layers and that each layer can have any desired number of pipes, depending on the size, length and weight.

In order to understand the method of building up the bundles 5 and 6, reference is made particularly to FIGS. 3 and 4, 5 and 6.

In FIG. 3 there is shown in diagrammatic form an end view of a bundle of pipe such as is shown in FIG. 1. The bundle 5 consists of four layers of pipes 7 with the pipes being nested in the pipes of the layer immediately below. It will be noted that the first and third layers 8 and 9 contain one more pipe than the second and fourth layers 10 and 11, so that the outermost pipes 12 in the layer 9 overhang the outermost pipes in layer 10.

The method of strapping the bundle of pipes shown in FIGS. 1 and 3 is shown in diagrammatic form in FIG. 4. Two pairs of straps 13 are employed, each pair being spaced inwardly of the ends of the bundle 5 as shown in FIG. 1. Each strap in the pair 13 is indicated by the numerals 14 and 15 and are laid side by side on the surface on which the bundle of pipe is built up on. A first layer 8 of pipes 7 is laid across the pairs of straps 13 and oppositely running ends of the individual straps 14 and 15 are wrapped about a selected pipe 16 in the manner shown by the arrows 17 and 18. A second layer 10 of pipe is then laid in nested arrangement on the layer 8 and the straps 14 and 15 are wrapped about the pipe 19 in reverse direction from the wrapping of these straps about the pipe 16. The pipe 19, as will be seen in FIG. 4 is nested against the right hand side of the pipe 16. A third layer 9 of pipe is laid in nested arrangement on the layer 10, and the straps 14 and 15 are wrapped about the pipe 20 in reverse direction. In this layer 9 the outermost pipes 12 are unsupported by the pipes of the layer below. In order to support these pipes 12 they, and two adjacent pipes 21 and 22, are strapped together in a loose manner by the straps 23 to permit these pipes to nest with the pipes below and with the pipes above, as will be later explained. The bundle is now completed by nesting the pipes of the layer 11 on the layer 9 and the straps 14 and 15 are wrapped about the pipe 24 in reverse direction. The outermost pipes 25 and 26 in the layer 11 nest with the pipes 12, 21 and 22 in the layer 9 and in turn cause the straps 23 to conform to the shape shown in FIG. 4.

The ends 14′ and 15′ of the straps 14 and 15 are now directed in opposite directions along the top of the bundle of pipes with the end 14′ of the strap 14 being secured to the end 15^2 of the strap 15 by the clamp 27, and the end 15′ of the strap 15 being secured to the end 14^2 of the strap 14 by the clamp 27′. The straps 23 are now tightened and clamped by the clamps 28. There is thus formed a single structural member A consisting of the pipes 16, 19, 20 and 24 bound together by the straps 14 and 15 and disposed at an angle to the vertical, intermediate the transverse width of the bundle.

The bundle 6, shown in FIGS. 2, 6 and 7 is built up in the same manner as above described except that, in this case, there are five layers 29, 30, 31, 32 and 33. In this case, because of reversing of the straps 14 and 15 about the pipes 16, 19, 20, 24 and 34, the end 14′ of the strap 14 is secured to the opposite end 14^2 of the same strap and the end 15′ is secured to the opposite end 15^2 of the same strap and clamped with the clamps 27 and 27′, respectively. In FIG. 6 the three outermost pipes in the layers 29 and 31 are secured by straps 23 in the same manner as described in connection with the arrangement shown in FIGS. 3 and 4.

It will be noted that the outermost pipes in the two top layers 9 and 11 in FIG. 3 and in the three top layers 31, 32 and 33 in FIG. 6 are disposed at an angle inwardly and upwardly from the sides of the bundles. In FIG. 8 two bundles of pipes are shown stacked, one above the other, without a pallet board or two-by-fours separating them. The angled formation of the top layers of the bundle form recesses 35 under the lowermost layer of the bundle above. When it is desired to remove the top bundle from a stack, the forks of a lift truck can be inserted under the bundle to be lifted, at the recess 35 on one side, the topmost bundle can then be lifted sufficiently for wedges to be inserted. The forks of the lift truck can then be inserted completely under the top bundle and the bundle be taken away. The bundles can be stacked in the same easy manner.

In the bundling of bell-mouthed pipes, that is to say, pipes having one end formed with an enlarged collar to permit the pipes to be coupled end to end, it is desirable to use the same method of bundling as is described above. FIGS. 9 and 10 illustrate how bell-mouthed pipes can be nested and bundled according to the present invention.

In alternate layers, the bell-mouthed pipes 36 are laid in reverse order, and the bell-mouthed ends 37 are extended beyond the straight ends 38 of the adjacent layers of pipe. The bell-mouthed ends 37 of adjacent pipes in any one layer are staggered lengthwise of the bundle, in the manner shown in FIG. 9. This permits the pipes to be nested in the manner shown in FIG. 10. The individual straps in each pair are interweaved with one bell-mouthed pipe in each layer in the same manner as is shown in FIGS. 4 and 7 so that, even with the slight separation of the pipes caused by the larger diameter of the bell-ends, the whole bundle is firmly held against movement during transportation of the bundle. The make up of the bundle of bell-mouthed pipes follows the pattern shown in FIGS. 3 to 7 and has the advantage of the built-in structural member A formed by the pipes 16, 19, 20, 24 and 34.

By use of pairs of straps 14 and 15 each layer is individually stabilized in the transverse direction of the bundle by wrapping the straps, in reverse direction,, about an intermediate pipe and by wrapping the straps, in reverse direction, about adjacent pipes in succeeding layers so as to bind a series of pipes into a single structural member A disposed in a common angular plane passing through the axis of the bound pipes. With the completion of the binding of the bundle by clamping the ends of the straps 14 and 15 the pipes in the various layers, on either side of the structural member A, are firmly nested together in such a manner as to hold all the pipes in the bundle against individual movement. Any tendency for the pipes to move relative to each other will cause added tension in the straps and a consequent tightening of the straps about the pipes forming the structural member A. The rigidity of the bundle of pipes is further increased in a horizontal direction.

The above described method of rigidly strapping a bundle of pipe, permits the bundles to be transported and stacked without the use of two-by-four separators, thereby permitting larger shipments to be placed on a vehicle or railroad car to a greater height than is possible with presently used methods of strapping and stacking of bundles.

What we claim is:

1. The method of bundling pipes and such like articles comprising laying one or more pairs of bundling straps with the individual straps in each pair being laid side by side, laying a first layer of pipes transversely on the said straps while wrapping oppositely running ends of the said straps about one intermediate pipe of the layer, nesting a second layer of pipes on the pipes of the said first layer and wrapping the said oppositely running ends of the straps about the one of the pipes in the said second layer, which is in contact with the strap wrapped pipe in the said first layer, and laying succeeding layers of pipe in nested arrangement, to the desired number of layers required in the bundle, with the oppositely running ends of

the straps being wrapped about one pipe in each layer, the strap wrapped pipes in each layer together forming a rigid member disposed in a plane passing through the axis of the wrapped pipes intermediate the transverse width of the bundle, and joining the free ends of the straps in each pair about the layers of pipes on each side of the said rigid member to secure the bundle.

2. The method of bundling pipes and such like articles comprising laying one or more pairs of bundling straps with the individual straps in each pair being laid side by side, laying a partial first layer of pipes transversely on the said straps and wrapping opposing ends of each strap in the pair about one end pipe in the said partial first layer, completing the said first layer of pipes on the side adjacent the wrapped pipe, nesting a second layer of pipes on the pipes of the said first layer and wrapping the ends of the straps, already wrapped about a pipe in the first layer, about an adjacent nested pipe in the said second layer, the said straps being wrapped about the pipe in the second layer in the reverse direction from their wrapping about the pipe in the first layer, and laying succeeding layers of pipes in nested arrangement to the desired number of layers required in the bundle, in the same manner as in the said first and second layers, the strap wrapped pipes in each layer together forming a rigid member disposed in a plane passing through the axis of the wrapped pipes, intermediate the transverse width of the bundle, and joining the free ends of the straps in each pair about the layers of pipes on each side of the said rigid member to secure the bundle.

3. The method of bundling pipes as set forth in claim 1, in which there is an even number of layers of pipes and the free ends of one of the straps of the pair are joined to the free ends of the other of the pair of straps.

4. The method of bundling pipes as set forth in claim 1, in which there is an odd number of layers of pipes and the free ends of each strap of the pair are joined together.

5. The method of bundling pipes as set forth in claim 1, in which the nested pipes in at least the first and third layers contain one more pipe than adjacent layers, and the outermost three pipes in at least the third layer are strapped together.

6. The method of bundling pipes as set forth in claim 5 in which the straps about the three outermost pipes are maintained slack to permit proper nesting of the pipes, and are tightened and secured after the bundle of pipes is secured by its straps.

7. The method of bundling pipes at set forth in claim 1, in which the pipes are bell-mouthed at one end and the bell-mouthed ends of the pipes in one layer are located at the opposite end of the bundle from the bell-mouthed ends of the pipes in adjacent layers, the bell-mouthed ends of adjacent pipes in each layer being staggered lengthwise of the bundle to permit close nesting of one layer of pipes with adjacent layers.

8. The method of bundling pipes as set forth in claim 1, in which at least the second uppermost layer in the bundle contains one less pipe than the layer below and the uppermost layer contains one less pipe than the layer below.

9. A shipping unit comprising a plurality of longitudinally extending pipes or like articles arranged in horizontal layers one above the other with the pipes in one layer being nested with the pipes in adjacent layers, one or more pairs of binding straps securing the said shipping unit in its layer arrangement, the individual straps of each pair being disposed side by side with each other and having oppositely running ends wrapped about one pipe in each layer in succession from the bottom layer upwards, the wrapped pipes in each layer being disposed in a common plane passing through the axis of the wrapped pipes, the opposite ends of the said individual straps in each pair being wrapped about the layers of pipes on each side of the said wrapped pipes, and means to secure the opposing ends of the said straps to each other.

10. A shipping unit as set forth in claim 9 in which the said wrapped pipes are disposed in a plane angled with respect to the horizontal layers of pipes and located intermediate the transverse width of the unit.

11. A shipping unit as set forth in claim 9, in which one of the layers of pipes contains one more pipe than does the layer immediately below and at least three of the outermost pipes in the said one layer are strapped together in nested arrangement with the pipes in adjacent layers.

12. A shipping unit as set forth in claim 9, in which at least the topmost layer of pipes contains one less pipe than the layer immediately below and also one less than the lowermost layer.

13. A shipping unit as set forth in claim 9, in which the pipes in the unit are bell-mouthed at one end and the bell-mouthed ends of the pipes in one layer are located at the opposite end of the unit from the bell-mouthed ends of the pipes in adjacent layers, and the bell-mouthed ends of adjacent pipes in each layer are staggered lengthwise of the unit to permit close nesting of one layer of pipes with adjacent layers.

References Cited by the Examiner

UNITED STATES PATENTS

1,703,495	2/1929	MacChesney et al.	
2,218,316	10/1940	Moon	105—369
2,300,059	10/1942	Perry	105—367
2,662,649	12/1953	Gill et al.	214—10.5

FOREIGN PATENTS

677,398	1/1964	Canada.

THERON E. CONDON, *Primary Examiner.*

W. T. DIXSON, *Assistant Examiner.*